Voltage Transducer LV 25-200

V_{PN} = 200 V

For the electronic measurement of voltages : DC, AC, pulsed..., with a galvanic isolation between the primary circuit (high voltage) and the secondary circuit (electronic circuit).

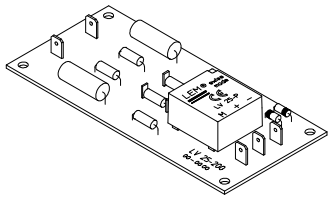

Electrical data

V_{PN}	Primary nominal r.m.s. voltage		200		V
V_P	Primary voltage, measuring range		0 .. ± 300		V
I_{PN}	Primary nominal r.m.s. current		10		mA
R_M	Measuring resistance		$R_{M\,min}$	$R_{M\,max}$	
	with ± 12 V	@ ± 200 V_{max}	30	200	Ω
		@ ± 300 V_{max}	30	100	Ω
	with ± 15 V	@ ± 200 V_{max}	100	320	Ω
		@ ± 300 V_{max}	100	180	Ω
I_{SN}	Secondary nominal r.m.s. current		25		mA
K_N	Conversion ratio		200 V / 25 mA		
V_C	Supply voltage (± 5 %)		± 12 .. 15		V
I_C	Current consumption		10 (@ ± 15V) + I_S		mA
V_d	R.m.s. voltage for AC isolation test [1], 50 Hz, 1 mn		4.1		kV

Accuracy - Dynamic performance data

X_G	Overall Accuracy @ V_{PN} , T_A = 25°C		± 0.8		%
ε_L	Linearity		< 0.2		%
			Typ	Max	
I_O	Offset current @ I_P = 0, T_A = 25°C			± 0.15	mA
I_{OT}	Thermal drift of I_O	- 25°C .. + 25°C	± 0.10	± 0.60	mA
		+ 25°C .. + 70°C	± 0.10	± 0.60	mA
t_r	Response time @ 90 % of $V_{P\,max}$		15		µs

General data

T_A	Ambient operating temperature	- 25 .. + 70	°C
T_S	Ambient storage temperature	- 40 .. + 85	°C
N	Turns ratio	2500 : 1000	
P	Total primary power loss	2	W
R_1	Primary resistance @ T_A = 25°C	20	kΩ
R_S	Secondary coil resistance @ T_A = 70°C	110	Ω
m	Mass	60	g
	Standards [2]	EN 50178	

Notes : [1] Between primary and secondary
[2] A list of corresponding tests is available

Features

- Closed loop (compensated) voltage transducer using the Hall effect
- Transducer with insulated plastic case recognized according to UL 94-V0
- Primary resistor R_1 and transducer mounted on printed circuit board 128 x 60 mm.

Advantages

- Excellent accuracy
- Very good linearity
- Low thermal drift
- High immunity to external interference.

Applications

- AC variable speed drives and servo motor drives
- Static converters for DC motor drives
- Battery supplied applications
- Uninterruptible Power Supplies (UPS)
- Power supplies for welding applications.

980909/2

Dimensions LV 25-200 (in mm. 1 mm = 0.0394 inch)

Front view

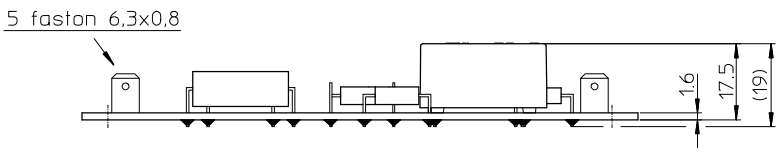

Top view

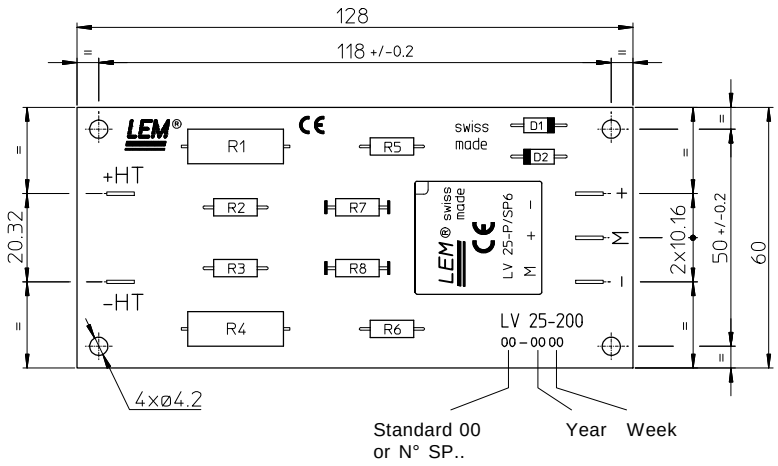

Secondary terminals

Terminal + : supply voltage + 12 .. 15 V
Terminal M : measure
Terminal - : supply voltage - 12 .. 15 V

Connection

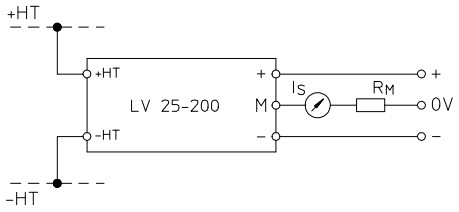

Mechanical characteristics

• General tolerance	± 0.3 mm
• Fastening	4 holes ∅ 4.2 mm
• Connection of primary	Faston 6.3 x 0.8 mm
• Connection of secondary	Faston 6.3 x 0.8 mm

Remarks

- $\mathbf{I}_S$ is positive when $\mathbf{V}_P$ is applied on terminal +HT.
- The primary circuit of the transducer must be linked to the connections where the voltage has to be measured.
- This is a standard model. For different versions (supply voltages, turns ratios, unidirectional measurements...), please contact us.

LEM reserves the right to carry out modifications on its transducers, in order to improve them, without previous notice.