Ultraminiature FM Radio ICs for Portable Equipment
LV2400X Series

The LV2400X series ICs are ground-breaking FM radio ICs that require absolutely no external components. They incorporate not only the FM radio functions but source selector, master volume control, tone control, headphone amplifier and other functions as well in a compact VQLP package with dimensions of only 5 × 5 × 0.8mm.
These ICs are simply ideal for incorporating FM radio functions into mobile phones and other small mobile devices where space is always at a premium.

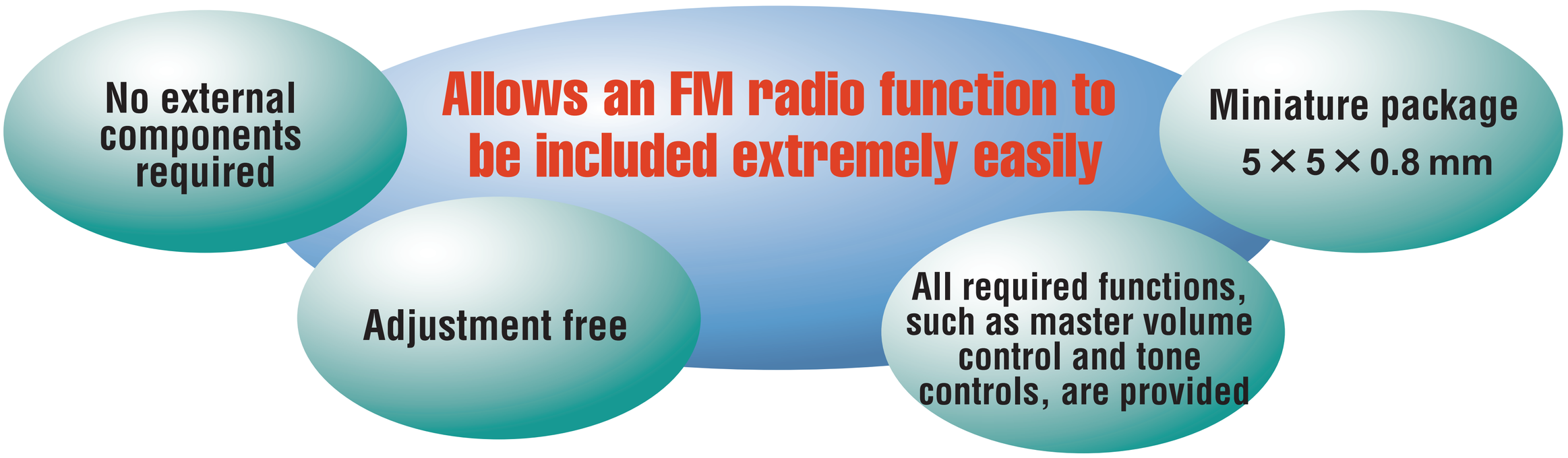

LV2400X Series

- Absolutely no external components required
- Absolutely no adjustments required
- Improved selectivity with low IF frequency (110 kHz)
- No FM detection discriminator required
- Built-in adjacent channel interference total reduction (no 114 kHz, no 190 kHz)
- New tuning concept
- Ultra-high sensitivity reception with low-noise mixer input circuit
- Built-in low power standby mode eliminates the need for a power switch circuit
- Composite output for RDS applications
- 3-wire bus interface (Clock, Data, NR-W) featured
- Digital AFC function provided
- Soft Mute, stereo-blend (8-step program control)
- Manual search, auto search, and auto preset supported
- Worldwide reception supported (reception of all bands in Japan, Europe, and the US enabled by changes in the program)
- Built-in master volume control
- Built-in source selector (LV24002)
- Built-in tone controls (LV24002)
- Built-in headphone amplifier (LV24002)

Product Lineup

- LV24000: FM radio function
- LV24002: FM radio + source selector + headphone amplifier functions
- LV24010: FM radio function + RDS demodulator function for the European market
- LV24100: FM radio function + AM radio function

Examples of applications in Mobile Phones

LV24000
(FM radio functions added)

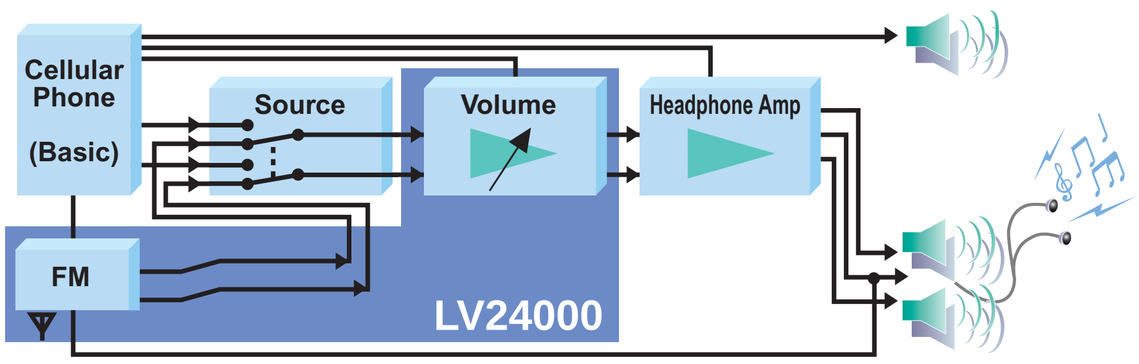

LV24002
(FM radio, source selector and headphone amplifier functions added)

