Preliminary Data Sheet
August 1998

microelectronics group

Lucent Technologies
Bell Labs Innovations

LUCDA4044 Phase Frequency Detector

Features

- Typical propagation delay 9.0 ns (through phase detector)
- Includes charge pump and amplifier
- Available in 14-pin DIP or SONB

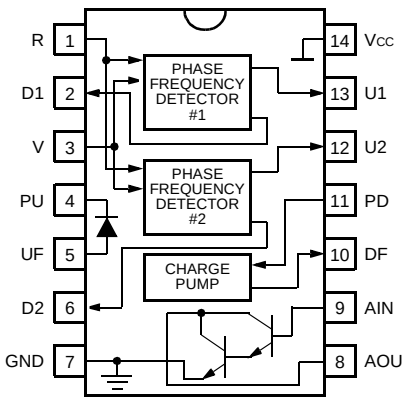

12-3519F

Figure 1. Functional Diagram

Applications

- Frequency synthesizers
- Clock recovery

Description

The LUCDA4044 consists of two digital phase detectors, a charge pump, and an amplifier. In combination with a voltage-controlled multivibrator, this device is useful in a broad range of phase-locked loop (PLL) applications. The circuit accepts TTL waveforms at the R and V inputs and generates an error voltage that is proportional to frequency and/or phase difference.

Phase detector #1 is intended for use in systems requiring zero frequency and phase at lock. Phase detector #2 is used if quadrature lock is desired. Phase detector #2 can also be used to indicate that the main loop (utilizing phase detector #1) is out of lock. This LUCDA4044 is a direct replacement for the *Motorola** MC4044.

* *Motorola* is a registered trademark of Motorola Inc.

Pin Information

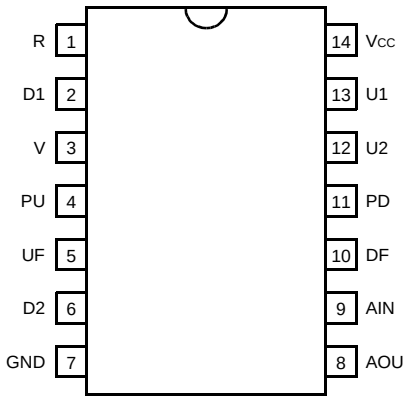

Figure 2. Pin Diagram

Table 1. Pin Descriptions

Symbol	Pin	Description
1	R	Common Reference Signal Input
2	D1	Detector #1 Output
3	V	Common Variable Signal Input
4	PU	Diode Cathode
5	UF	Diode Anode
6	D2	Detector #2 Output
7	GND	Power Supply Ground
8	AOU	Amplifier Output
9	AIN	Amplifier Input
10	DF	Charge Pump Output
11	PD	Charge Pump Input
12	U2	Detector #2 Output
13	U1	Detector #1 Output
14	V_{CC}	Positive Power Supply

Absolute Maximum Ratings

Stresses in excess of the absolute maximum ratings can cause permanent damage to the device. These are absolute stress ratings only. Functional operation of the device is not implied at these or any other conditions in excess of those given in the operational sections of the data sheet. Exposure to absolute maximum ratings for extended periods can adversely affect device reliability.

Parameter	Symbol	Value	Unit
Ambient Operating Temperature	—	–40 to +85	°C
Storage Temperature Range	T_{stg}	–40 to +125	°C
Power Supply Voltage (V_{CC} to GND)	—	7.0	V

Truth Table

This table is not strictly a functional truth table; i.e., it does not show all possible modes of operation. It is included as an aid for dc testing.

Table 2. Truth Table

Input State	Input		Output			
	R	V	U1	D1	U2	D2
1	0	0	x	x	1	1
2	1	0	x	x	0	1
3	1	1	x	x	1	0
4	1	0	x	x	0	1
5	0	0	x	x	1	1
6	1	0	x	x	0	1
7	0	0	0	1	1	1
8	1	0	0	1	0	1
9	0	0	0	1	1	1
10	0	1	0	1	1	1
11	0	0	1	1	1	1
12	0	1	1	1	1	1
13	0	0	1	0	1	1
14	0	1	1	0	1	1
15	0	0	1	0	1	1
16	1	0	1	0	0	1
17	0	0	1	1	1	1

Notes:
x indicates output state unknown.

U1 and D1 outputs are sequential, i.e., they must be sequenced in the order shown.

U2 and D2 outputs are combinational, i.e., they need only inputs to obtain the desired output state.

Electrical Characteristics

Table 3. Electrical Characteristics (at 25 °C)

Parameter	Symbol	Test Conditions	Min	Typ	Max	Unit
Output Voltage High (pins 2, 6, 12, 13)	V_{OH}	I_{OH} = –1.6 mA V_{CC} = 4.75 V	2.4	—	—	V
Output Voltage Low (pins 2, 6, 12, 13)	V_{OL}	I_{OL} = 16 mA V_{CC} = 4.75 V	—	—	0.4	V
Input Voltage High (pins 1, 3, 11)	V_{IH}	V_{CC} = 4.75 V	2.0	—	—	V
Input Voltage Low (pins 1, 3, 11)	V_{IL}	V_{CC} = 4.75 V	—	—	0.8	V
Input Current Low #1 (pins 1 and 3)	I_{IL1}	V_{IL} = 0.4 V V_{CC} = 5.25 V	—	—	–2.4	mA
Input Current Low #2 (pin 11)	I_{IL2}	V_{IL} = 0.4 V V_{CC} = 5.25 V	—	—	–0.8	mA
Input Current High #1 (pins 1 and 3)	I_{IH1}	V_{IH} = 2.4 V V_{CC} = 5.25 V	—	—	120	µA
Input Current High #2 (pin 11)	I_{IH2}	V_{IH} = 2.4 V V_{CC} = 5.25 V	—	—	40	µA
Input Current High (pins 1, 3, 11)	I_{IHH}	V_{IH} = 5.25 V V_{CC} = 5.25 V	—	—	1.0	mA
Clamp Voltage (pins 1, 3, 11)	Vclamp	I_{IN} = –18 mA V_{CC} = 4.75 V	—	—	–1.5	V
Output Current (pins 2, 6, 12, 13)	I_{OS}	V_{OL} = 0 V* V_{CC} = 5.25 V	–30	—	–85	mA
Forward Diode Voltage (pin 5)	V_{DF}	I_{IN} = 1 mA V_{CC} = 5.25 V	0.4	—	1.0	V
Reverse Diode Voltage (pin 4)	V_{DR}	I_{IN} = 5 µA V_{CC} = 5.25 V	5.25	—	—	V
Output Voltage High (pin 10)	V_{OH}	I_{OH} = –1 mA V_{CC} = 4.75 V	2.5	—	—	V
Output Voltage Low (pin 10)	V_{OL}	I_{OL} = 100 µA V_{CC} = 4.75 V		—	0	V
Output Current (pin 8)	I_{OLK}	V_A = 0 V V_{CC} = 5.25 V		—	120	µA
Output Current (pin 8)	I_O	I_A = 10 µA V_{CC} = 5.25 V	5.25	—	—	mA

* Pins 2 and 13 are prone to change state; care must be taken during testing.

Outline Diagrams

14-Pin SONB

Dimensions are in millimeters.

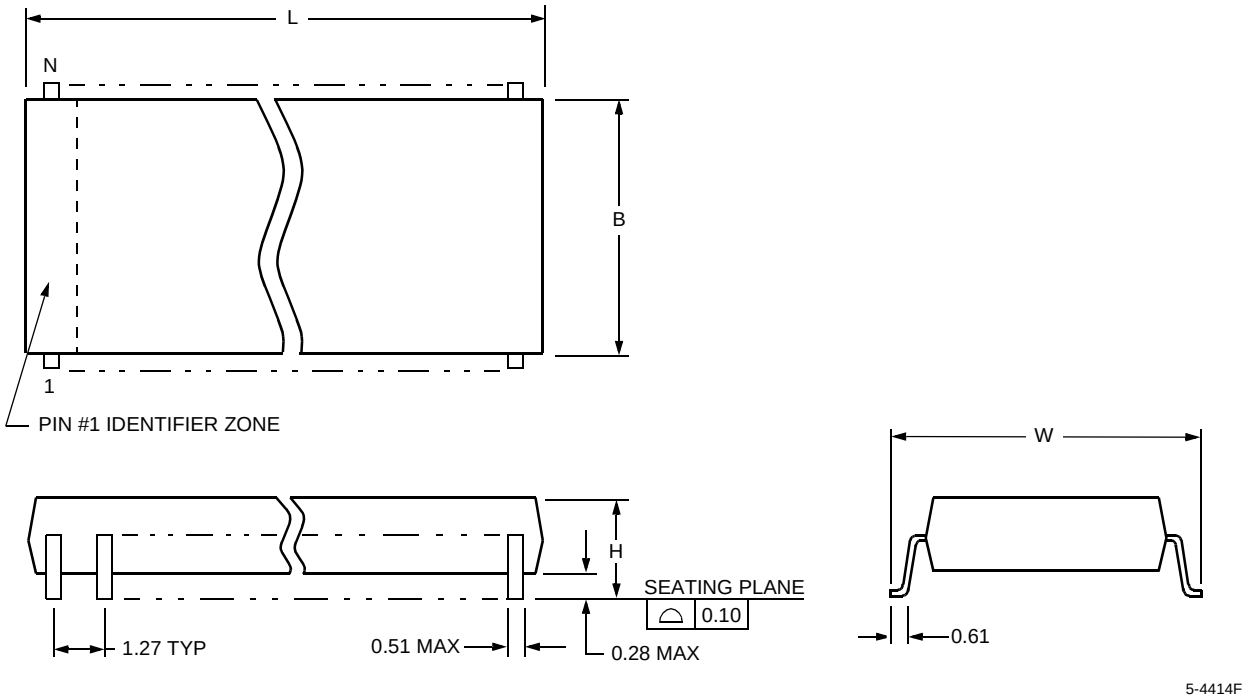

Package Description	Number of Pins "N"	Package Dimensions			
		Maximum Length "L"	Maximum Width Without Leads "B"	Maximum Width Including Leads "W"	Maximum Height Above Board "H"
SONB (Small Outline Narrow Body)	14	8.84	4.01	6.17	1.73

Outline Diagrams (continued)

14-Pin DIP

Dimensions are in millimeters.

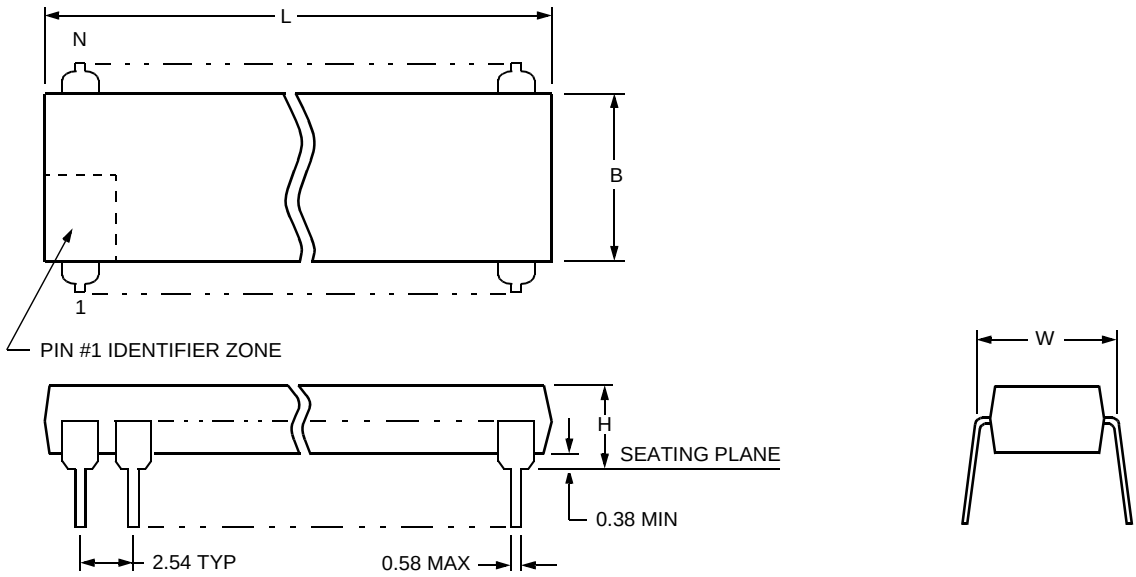

5-4410F

Package Description	Number of Pins "N"	Package Dimensions			
		Maximum Length "L"	Maximum Width Without Leads "B"	Maximum Width Including Leads "W"	Maximum Height Above Board "H"
PDIP3 (Plastic Dual Inline Package) (0.300" Series)	14	20.57	6.47	7.87	5.08

Ordering Information

Device Code	Package	Operating Temperature	Comcode
LUCDA4044AAFE	14-Pin SONB	–40 to +85	108158403
LUCDA4044AAFE-TR	14-Pin SONB Tape and Reel	–40 to +85	108158411
LUCDA4044AAPE	14-Pin DIP	–40 to +85	108158429

For additional information, contact your Microelectronics Group Account Manager or the following:

INTERNET: **http://www.lucent.com/micro**
E-MAIL: **docmaster@micro.lucent.com**
N. AMERICA: Microelectronics Group, Lucent Technologies Inc., 555 Union Boulevard, Room 30L-15P-BA, Allentown, PA 18103
1-800-372-2447, FAX 610-712-4106 (In CANADA: **1-800-553-2448**, FAX 610-712-4106)
ASIA PACIFIC: Microelectronics Group, Lucent Technologies Singapore Pte. Ltd., 77 Science Park Drive, #03-18 Cintech III, Singapore 118256
Tel. (65) 778 8833, FAX (65) 777 7495
CHINA: Microelectronics Group, Lucent Technologies (China) Co., Ltd., A-F2, 23/F, Zao Fong Universe Building, 1800 Zhong Shan Xi Road, Shanghai 200233 P. R. China **Tel. (86) 21 6440 0468**, **ext. 316**, FAX (86) 21 6440 0652
JAPAN: Microelectronics Group, Lucent Technologies Japan Ltd., 7-18, Higashi-Gotanda 2-chome, Shinagawa-ku, Tokyo 141, Japan
Tel. (81) 3 5421 1600, FAX (81) 3 5421 1700
EUROPE: Data Requests: MICROELECTRONICS GROUP DATALINE: **Tel. (44) 1189 324 299**, FAX (44) 1189 328 148
Technical Inquiries: GERMANY: **(49) 89 95086 0** (Munich), UNITED KINGDOM: **(44) 1344 865 900** (Bracknell),
FRANCE: **(33) 1 48 83 68 00** (Paris), SWEDEN: **(46) 8 600 7070** (Stockholm), FINLAND: **(358) 9 4354 2800** (Helsinki),
ITALY: **(39) 2 6608131** (Milan), SPAIN: **(34) 1 807 1441** (Madrid)

Lucent Technologies Inc. reserves the right to make changes to the product(s) or information contained herein without notice. No liability is assumed as a result of their use or application. No rights under any patent accompany the sale of any such product(s) or information.

Copyright © 1998 Lucent Technologies Inc.
All Rights Reserved
Printed in U.S.A.

August 1998
DS98-390LEG

microelectronics group

Lucent Technologies
Bell Labs Innovations

