BOTHHAND
USA.

"LAN-MATE"SERIES

1X3 RJ45 CONNECTOR MODULE WITH INTEGRATED 10/100 BASE-TX MAGNETICS

- RJ-45 connector integrated with X'FMR/impedance resistor/high voltage capacitor.
- Size same as RJ-45 connector to save PCB board space
- Reduce EMI radiation, improve EMI performance.
- Design for 100 Base transmission over UTP-5 cable
- Operating temperature range: 0℃to +70℃
- Storage temperature range: -40℃to +125℃

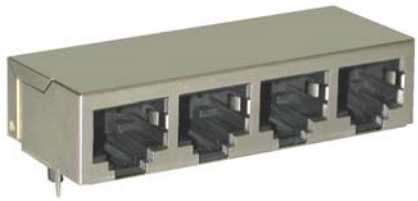

Electrical specifications @ 25℃

Isolation Voltage : 1500Vrms

Rise time(10-90%): 2.5ns Typ.

OCL(100KHz, 0.1Vrms with 8mA/DC Bias) : 350 uH Min.

Part Number	Cross talk (dB Min)	Insertion Loss (dB Max)	Return Loss (dB Min)					Differential to Common Mode Rejection (dB Min)	Turns Ratio (±5%)		CW/W (pF Max) TX/RX	L.L (uH Min)	
	0.3-80MHz	0.3~100MHz	30MHz	40MHz	50MHz	60MHz	80MHz	0.3-100MHz	TX	RX		TX	RX
LU3S041	-35	-1.15	-16	-14	-13.5	-13	-10	-30	1CT:1CT		28	0.5	
LU3S041L	-35	-1.15	-16	-14	-13.5	-13	-10	-30	1CT:1CT		28	0.5	
LU3S042	-35	-1.15	-16	-14	-13.5	-13	-10	-30	2CT:1CT	1CT:1CT	30	1.3	0.5
LU3S049	-35	-1.15	-16	-14	-13.5	-13	-10	-30	1CT:1CT		28	0.4	
LU3S092	-38	-1.15	-16	-14	-13.5	-13	-10	-	1.41CT:1CT	1CT:1CT	30	0.8	0.5

Note:LU3S092 1.CMRR:-40 dB Min @ 0.3-100MHz

2. Insulation resistance:10, 000MΩ @ 500 Vdc

Bothhand USA. e-mail: sales@bothhandusa.com http://www.bothhand.com
462 Boston St - Topsfield, MA 01983 - Phone: 978-887-8050 - Fax: 978-887-5434

"LAN-MATE"SERIES

1X3 RJ45 CONNECTOR MODULE WITH INTEGRATED 10/100 BASE-TX MAGNETICS

Mechanicals

LU3SXXX

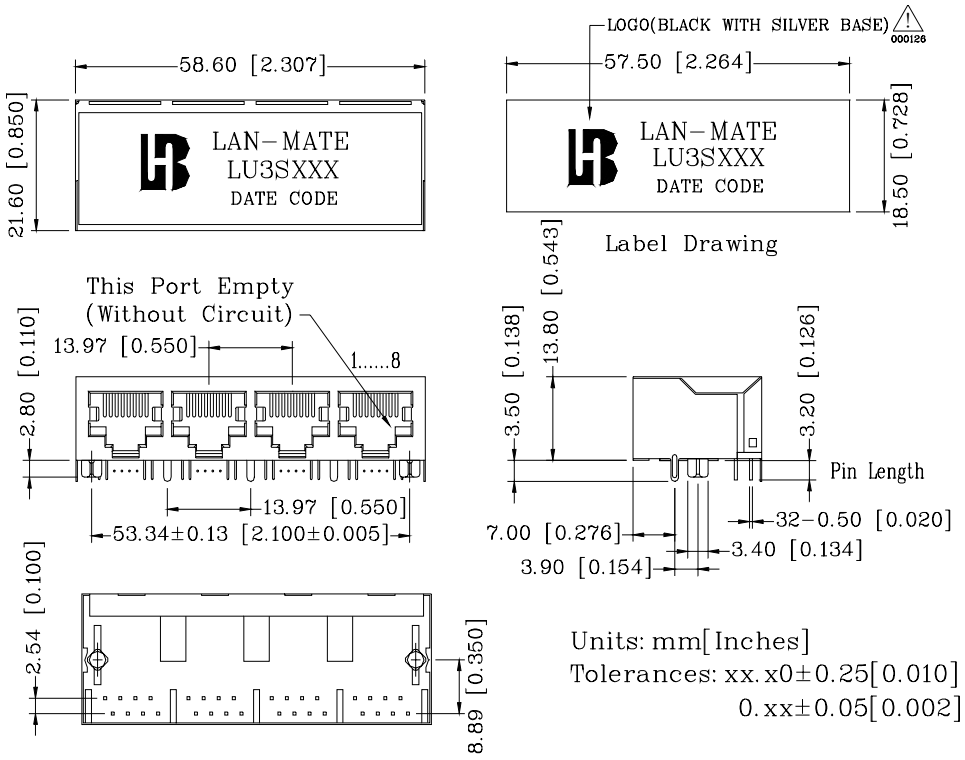

LU3S041L

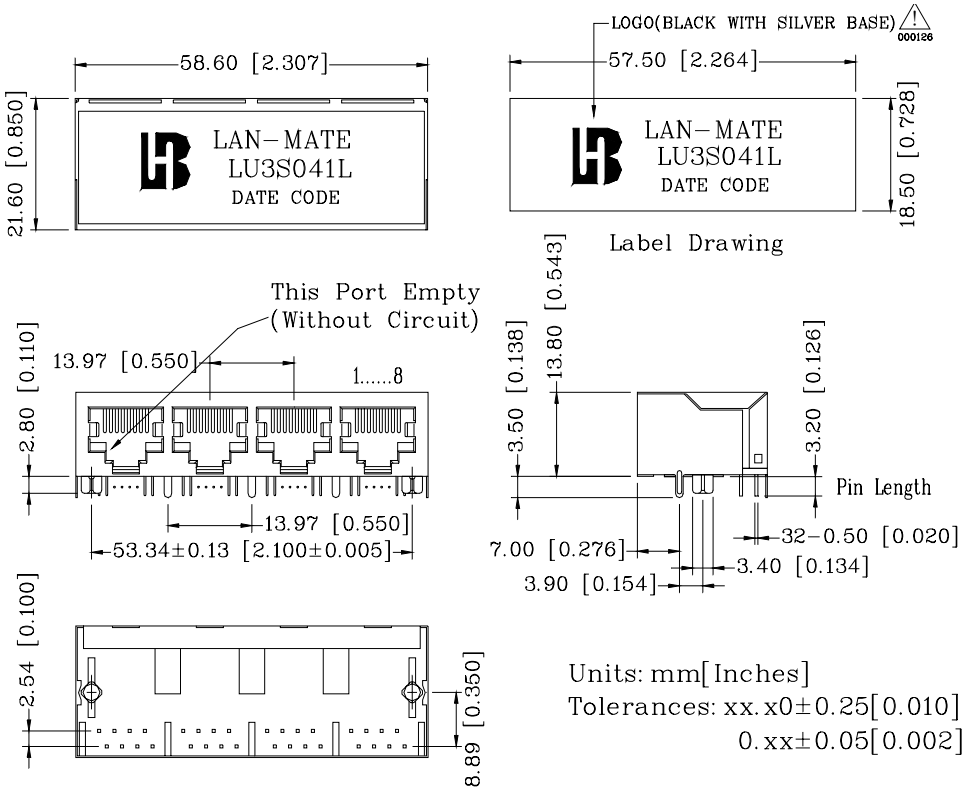

"LAN-MATE"SERIES

1X3 RJ45 CONNECTOR MODULE WITH INTEGRATED 10/100 BASE-TX MAGNETICS

LU3S049

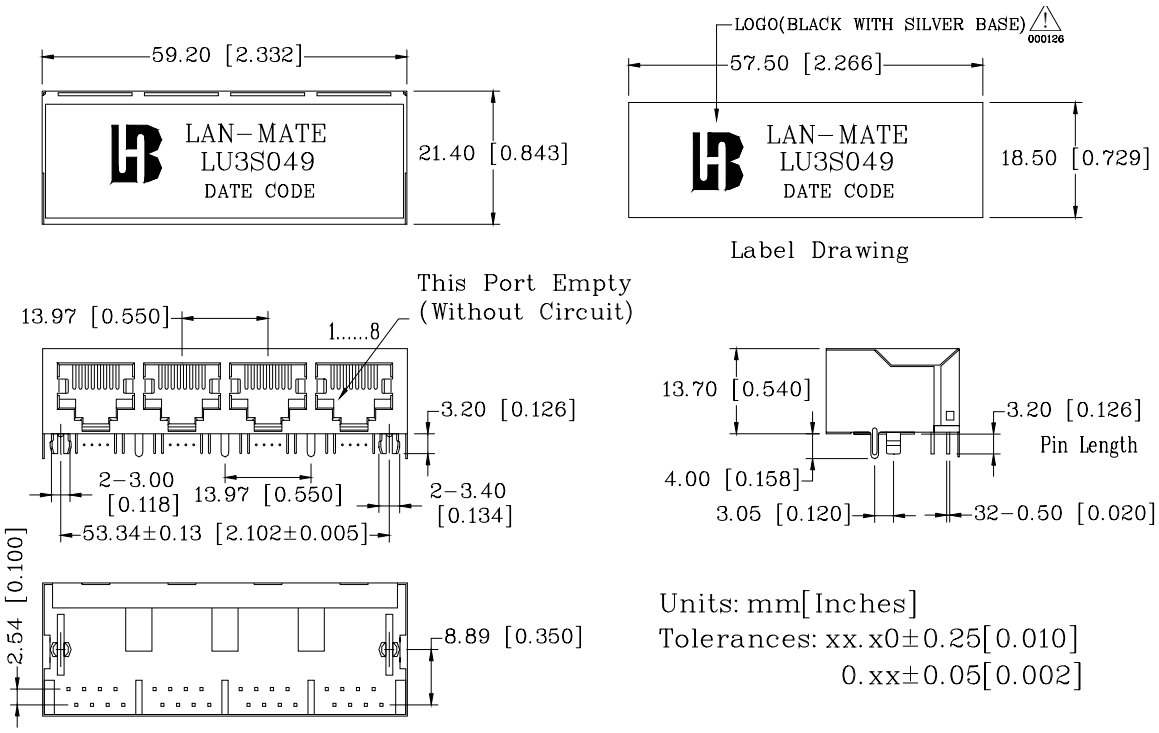

Physical char : 1. Plastic Material : PBT 15% Glass Filled(UL 94V-0), Black Housing

2. Metal Shield : Brass C2680-H, 20u Nickel Plated, t=0.25mm
3. Spring Wire : 0.45mm Dia. Phosphor bronze over with 6u gold plated
4. Solder Pin : 0.4x0.4mm, Phosphor bronze with solder Solder plated
5. Durability : 300 Mating cycles Min.

PCB Layout Mounting Hole (Top View)

LU3SXXXX

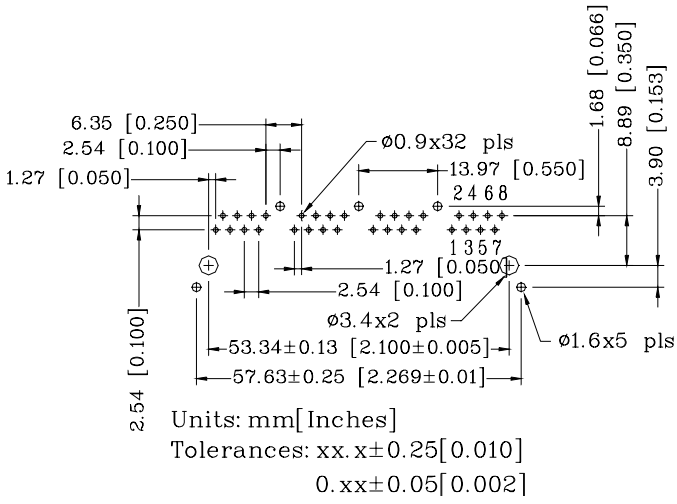

LU3S049

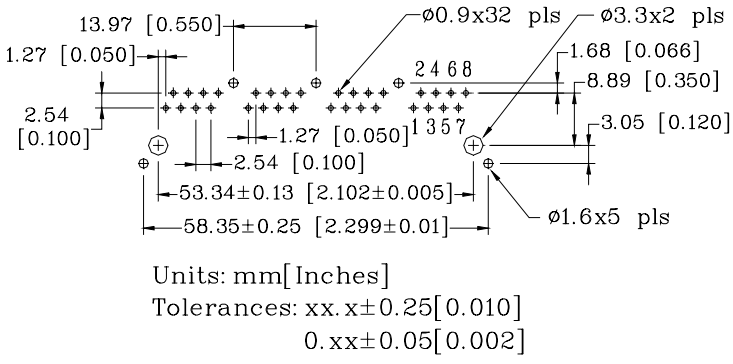

"LAN-MATE"SERIES

1X3 RJ45 CONNECTOR MODULE WITH INTEGRATED 10/100 BASE-TX MAGNETICS

Schematics

LU3S041

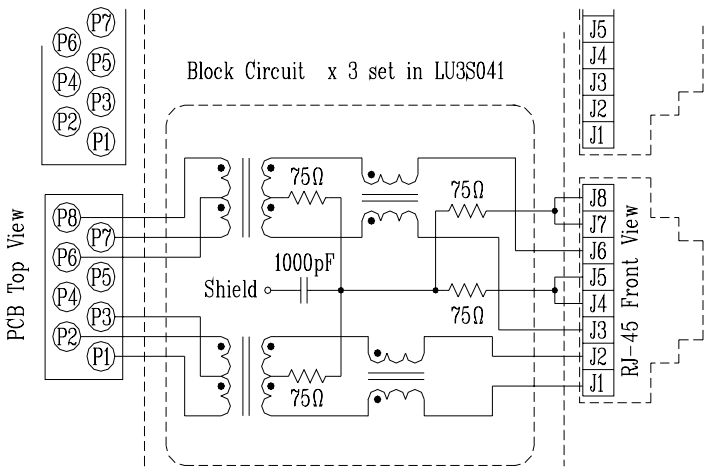

LU3S041L

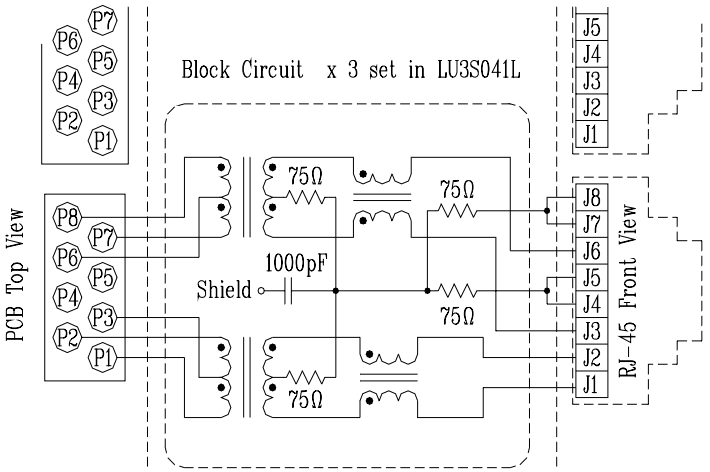

LU3S042

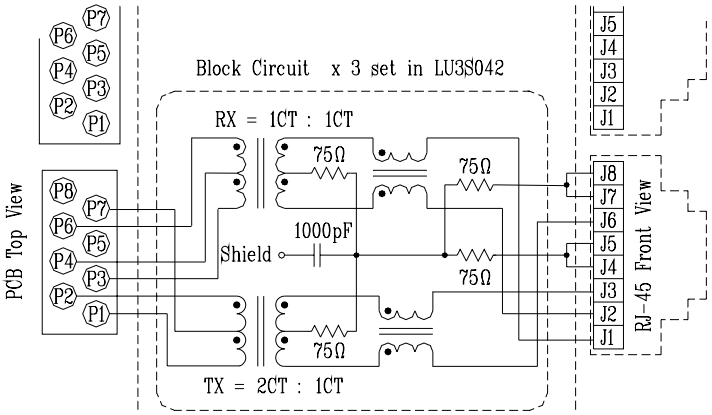

LU3S049

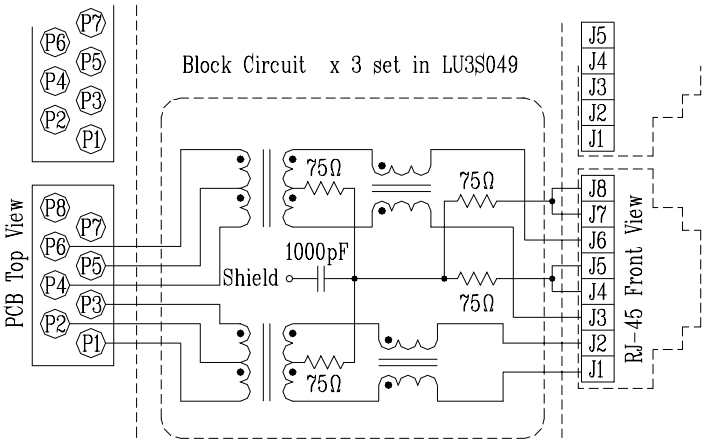

LU3S092

