Specify AEL

Ceramic Filter LTU Series
455kHz or 450kHz



Ceramic Filters

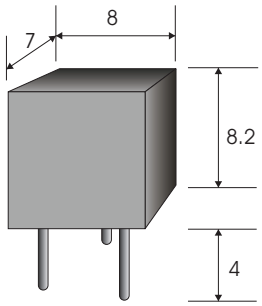

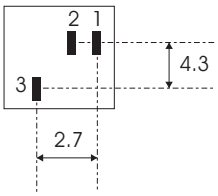

Pin Connections

1 = Input
2 = Ground
3 = Output

To take the best advantage of the safety feature of ceramic filters, connect output to anIF amplifier through a DC cut capacitor.
Avoid directly applying DC to output end of ceramic filters (Between 5 & 2,3,4)

FEATURES

- High Selectivity
- Low Cost
- Wide Range of bandwidths Available
- Industry Standard Outline & Pinout

APPLICATIONS

- Communications Equipment

SPECIFICATION

Part Number	Centre Freq (MHz)	Insertion Loss (dB Max)	Pass Band Ripple (dB Max)	6 dB Bandwidth (kHz Min)	40 dB Bandwidth (kHz Min)	Stopband Att. +/-100kHz (dB Min)	Input/Output Impedence ( )
LTU455B2	455 +/-2.0	4	2	+/-15.0	+/-30.0	27	1500
LTU455C2	455 +/-2.0	4	2	+/-12.5	+/-24.0	27	1500
LTU455D2	455 +/-1.5	4	2	+/-10.0	+/-20.0	27	1500
LTU455E2	455 +/-1.5	6	2	+/- 7.5	+/-15.0	27	1500
LTU455F2	455 +/-1.5	6	2	+/- 6.0	+/-12.5	27	2000
LTU455G2	455 +/-1.5	6	2	+/- 4.5	+/-10.0	25	2000
LTU455H2	455 +/-1.0	6	2	+/- 3.0	+/- 9.0	25	2000
LTU455I2	455 +/-1.0	6	2	+/- 2.0	+/- 7.5	25	2000
LTU455HT	455 +/-1.0	6	2	+/- 3.0	+/- 9.0	35	2000

Frequency Characteristics

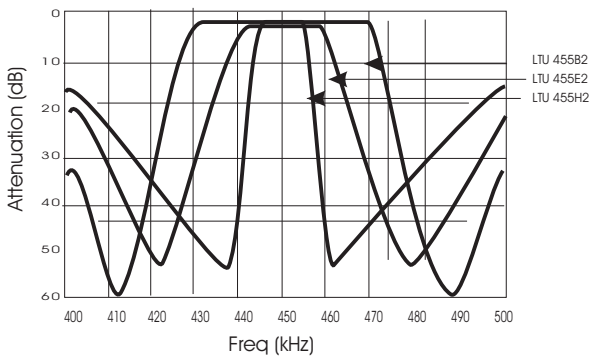

Test Circuit

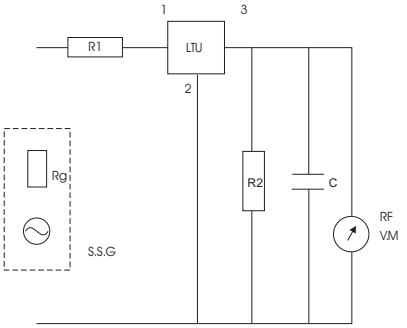

Rg+R1+R2=input/Output Impedence
C=10pF (Including strays and input/output capacitance of RF Voltmeter

Specify AEL

Ceramic Filter LTW33 Series
450 kHz & 455kHz

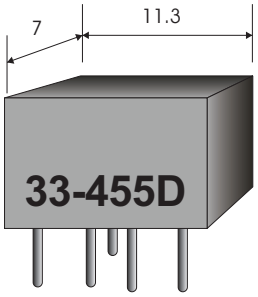

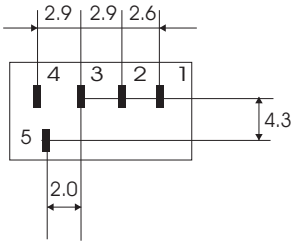

Pin Connections

1 = Input
2 = Ground
3 = Ground
4 = Ground
5 = Output

To take the best advantage of the safety feature of ceramic filters, connect output to anIF amplifier through a DC cut capacitor.
Avoid directly applying DC to output end of ceramic filters (Between 5 & 2,3,4)

FEATURES

- High Selectivity
- Low Cost
- Wide Range of bandwidths Available
- Industry Standard Outline

APPLICATIONS

- Communications Equipment

SPECIFICATION

Part Number	Centre Freq (MHz)	Insertion Loss (dB Max)	Pass Band Ripple (dB Max)	6 dB Bandwidth (kHz Min)	40 dB Bandwidth (kHz Min)	Stopband Att. +/-100kHz (dB Min)	Input/Output Impedence ( )
LTW33-455B	455 +/-2.0	4	2	+/-15.0	+/-30.0	35	1500
LTW33-455C	455 +/-2.0	4	2	+/-12.5	+/-24.0	35	1500
LTW33-455D	455 +/-1.5	4	2	+/-10.0	+/-20.0	35	1500
LTW33-455E	455 +/-1.5	6	2	+/- 7.5	+/-15.0	35	1500
LTW33-455F	455 +/-1.5	6	2	+/- 6.0	+/-12.5	35	2000
LTW33-455G	455 +/-1.5	6	2	+/- 4.5	+/-10.0	35	2000
LTW33-455H	455 +/-1.0	6	2	+/- 3.0	+/- 9.0	35	2000
LTW33-455I	455 +/-1.0	6	2	+/- 2.0	+/- 7.5	35	2000
LTW33-455HT	455 +/-1.0	6	2	+/- 3.0	+/- 9.0	60	2000

Frequency Characteristics

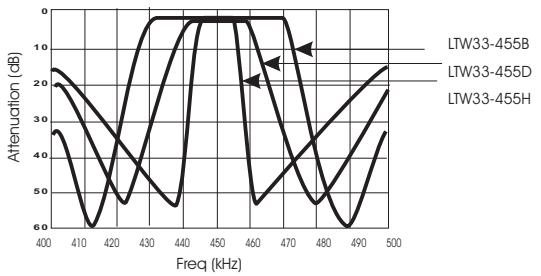

Test Circuit

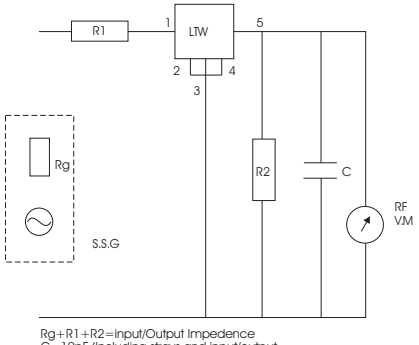

Rg+R1+R2=input/Output Impedence
C=10pF (Including strays and input/output capacitance of RF Voltmeter