LTW33-455 CERAMIC FILTER

6 Element

- High selectivity type ceramic filters
- A variety of bandwidths available
- Easily mounted to PCB
- Miniature size

SPECIFICATION

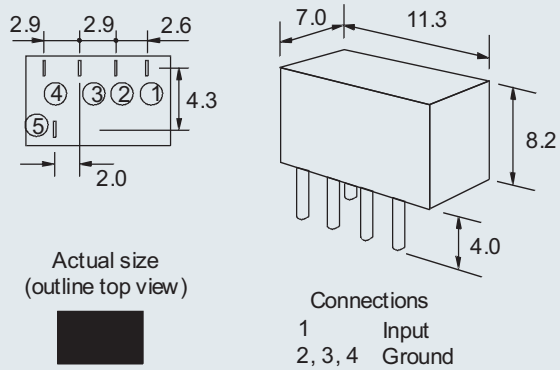

Outline and Dimensions

Frequency v. Attenuation Characteristics

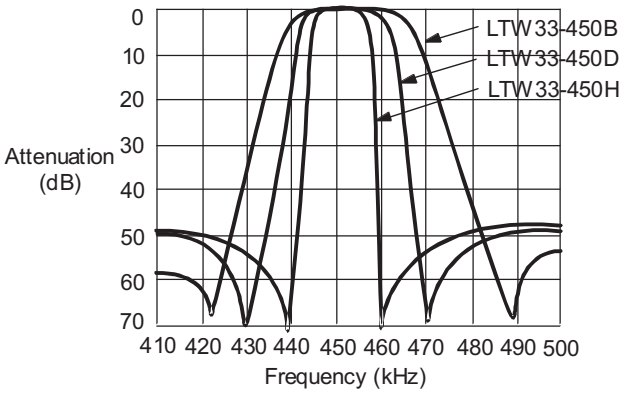

ELECTRICAL CHARACTERISTICS

Part Number	Centre Frequency (kHz)	Insertion Loss (dB max.)	Pass Band Ripple (dB max.)	6dB Bandwidth (kHz min.)	50dB Bandwidth (kHz min.)	Stop Band Att. ±100kHz (dB min.)	Input/Output Impedance (Ω)
LTW33-455B	455±2	4	2	±15	±30	45	1500
LTW33-455C	455±2	4	2	±12.5	±24	45	1500
LTW33-455D	**455±1.5**	**6**	**2**	**±7.5**	**±15**	**45**	**1500**
LTW33-455E	**455±1.5**	**4**	**2**	**±10**	**±20**	**45**	**1500**
LTW33-455F	455±1.5	6	2	±6	±12.5	45	2000
LTW33-455G	455±1.5	6	2	±4.5	±10	45	2000
LTW33-455H	455±1.0	6	2	±3	±9	45	2000
LTW33-455I	455±1.0	6	2	±2	±7.5	45	2000
LTW33-455HT	455±1.0	6	2	±3	±9	60	2000
LTW33-455IT	455±1.0	6	2	±2	±7.5	60	2000

TEST CIRCUIT

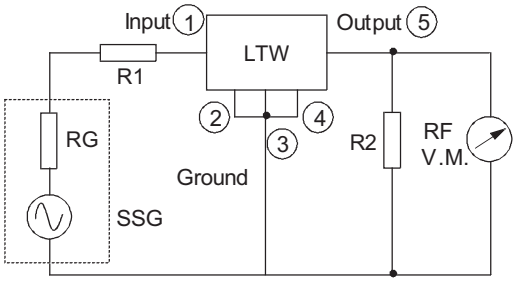

RG+R1=R2=Input/Output Impedance

EUROQUARTZ LIMITED Blacknell Lane CREWKERNE Somerset UK TA18 7HE
Tel: +44(0)1460 230000 Fax: +44(0)1460 230001 Email: sales@euroquartz.co.uk www.euroquartz.co.uk