2.4GHz Low Noise, Low Distortion Differential ADC Driver for 300MHz IF

FEATURES

- **2.4GHz –3dB Bandwidth**
- **Fixed Gain of 5V/V (14dB)**
- **–97dBc IMD3 at 70MHz (Equivalent OIP3 = 52.4dBm)**
- **–66dBc IMD3 at 300MHz (Equivalent OIP3 = 36.9dBm)**
- 1.1nV/√Hz Internal Op Amp Noise
- 2.5nV/√Hz Total Input Noise
- 7.5dB Noise Figure
- Differential Inputs and Outputs
- 200Ω Input Impedance
- 2.85V to 3.5V Supply Voltage
- 85mA Supply Current (255mW)
- 1V to 1.6V Output Common Mode Voltage, Adjustable
- DC- or AC-Coupled Operation
- Max Differential Output Swing $4.8V_{P-P}$
- Small 16-Lead 3mm × 3mm × 0.75mm QFN Package

APPLICATIONS

- Differential ADC Driver
- Differential Driver/Receiver
- Single Ended to Differential Conversion
- IF Sampling Receivers
- SAW Filter Interfacing

DESCRIPTION

The LTC®6400-14 is a high-speed differential amplifier targeted at processing signals from DC to 300MHz. The part has been specifically designed to drive 12-, 14- and 16-bit ADCs with low noise and low distortion, but can also be used as a general-purpose broadband gain block.

The LTC6400-14 is easy to use, with minimal support circuitry required. The output common mode voltage is set using an external pin, independent of the inputs, which eliminates the need for transformers or AC-coupling capacitors in many applications. The gain is internally fixed at 14dB (5V/V).

The LTC6400-14 saves space and power compared to alternative solutions using IF gain blocks and transformers. The LTC6400-14 is packaged in a compact 16-lead 3mm × 3mm QFN package and operates over the –40°C to 85°C temperature range.

, LT, LTC and LTM are registered trademarks of Linear Technology Corporation.
All other trademarks are the property of their respective owners.

TYPICAL APPLICATION

Single-Ended to Differential ADC Driver

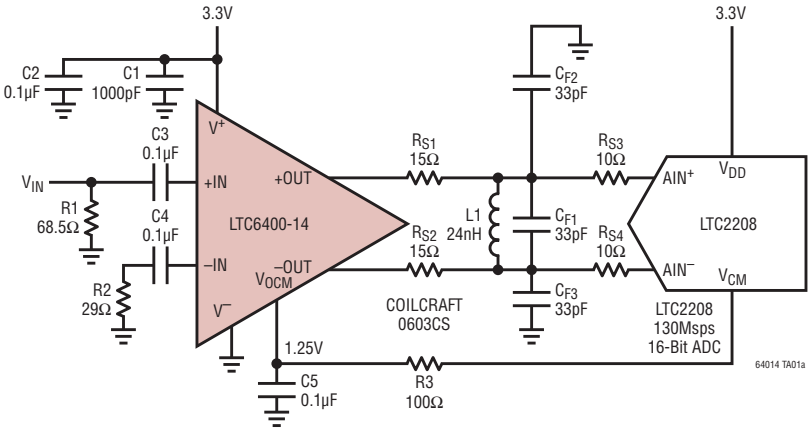

Equivalent Output IP3 vs Frequency

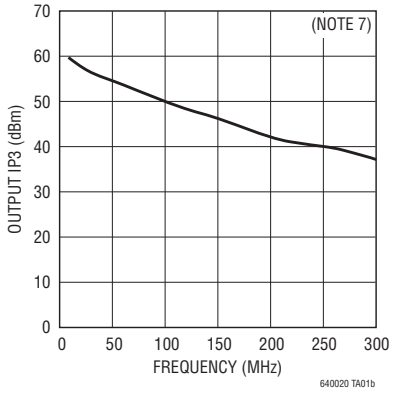

ABSOLUTE MAXIMUM RATINGS

(Note 1)

Supply Voltage ($V^+ – V^–$) 3.6V
Input Current (Note 2).....±10mA
Operating Temperature Range
(Note 3) .....–40°C to 85°C
Specified Temperature Range
(Note 4) .....–40°C to 85°C
Storage Temperature Range.....–65°C to 150°C
Maximum Junction Temperature.....150°C
Lead Temperature (Soldering, 10 sec) .....300°C

PIN CONFIGURATION

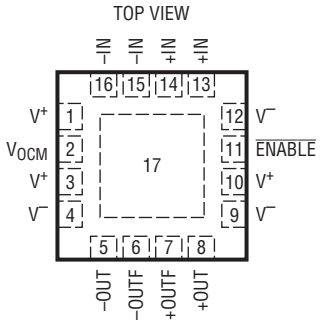

UD PACKAGE
16-LEAD (3mm × 3mm) PLASTIC QFN
T_{JMAX} = 150°C, θ_{JA} = 68°C/W, θ_{JC} = 4.2°C/W
EXPOSED PAD (PIN 17) IS $V^–$, MUST BE SOLDERED TO PCB

ORDER INFORMATION

LEAD FREE FINISH	TAPE AND REEL	PART MARKING*	PACKAGE DESCRIPTION	SPECIFIED TEMPERATURE RANGE
LTC6400CUD-14#PBF	LTC6400CUD-14#TRPBF	LCCR	16-Lead (3mm × 3mm) Plastic QFN	0°C to 70°C
LTC6400IUD-14#PBF	LTC6400IUD-14#TRPBF	LCCR	16-Lead (3mm × 3mm) Plastic QFN	–40°C to 85°C

Consult LTC Marketing for parts specified with wider operating temperature ranges. *The temperature grade is identified by a label on the shipping container.
Consult LTC Marketing for information on non-standard lead based finish parts.

For more information on lead free part marking, go to: http://www.linear.com/leadfree/
For more information on tape and reel specifications, go to: http://www.linear.com/tapeandreel/

LTC6400 AND LTC6401 SELECTOR GUIDE

Please check each datasheet for complete details.

PART NUMBER	GAIN (dB)	GAIN (V/V)	Z_{IN} (DIFFERENTIAL) (Ω)	I_{CC} (mA)
LTC6400-8	8	2.5	400	85
LTC6400-14	14	5	200	85
LTC6400-20	20	10	200	90
LTC6400-26	26	20	50	85
LTC6401-8	8	2.5	400	45
LTC6401-14	14	5	200	45
LTC6401-20	20	10	200	50
LTC6401-26	26	20	50	45

In addition to the LTC6400 family of amplifiers, a lower power LTC6401 family is available. The LTC6401 is pin compatible to the LTC6400, and has the same low noise performance. The lower power consumption of the LTC6401 comes at the expense of slightly higher non-linearity, especially at input frequencies above 140MHz. Please refer to the separate LTC6401 data sheets for complete details.

DC ELECTRICAL CHARACTERISTICS

The ● denotes the specifications which apply over the full operating temperature range, otherwise specifications are at T_A = 25°C. V^+ = 3V, V^- = 0V, +IN = –IN = V_{OCM} = 1.25V, $\overline{ENABLE}$ = 0V, No R_L unless otherwise noted.

SYMBOL	PARAMETER	CONDITIONS		MIN	TYP	MAX	UNITS
Input/Output Characteristic							
G_{DIFF}	Gain	V_{IN} = ±200mV Differential	●	13.5	14	14.5	dB
TC_{GAIN}	Gain Temperature Drift	V_{IN} = ±200mV Differential	●		–0.9		mdB/°C
$V_{SWINGMIN}$	Output Swing Low	Each Output, V_{IN} = ±800mV Differential	●		77	160	mV
$V_{SWINGMAX}$	Output Swing High	Each Output, V_{IN} = ±800mV Differential	●	2.35	2.48		V
$V_{OUTDIFFMAX}$	Maximum Differential Output Swing	1dB Compressed	●		4.8		V_{P-P}
I_{OUT}	Output Current Drive	Each Output	●	20			mA
V_{OSDIFF}	Input Differential Offset Voltage		●	–3		3	mV
TCV_{OSDIFF}	Input Differential Offset Voltage Drift	T_{MIN} to T_{MAX}	●		0.7		µV/°C
I_{VRMIN}	Input Common Mode Voltage Range, MIN					1	V
I_{VRMAX}	Input Common Mode Voltage Range, MAX			1.8			V
R_{INDIFF}	Input Resistance (+IN, –IN)	Differential	●	170	200	230	Ω
C_{INDIFF}	Input Capacitance (+IN, –IN)	Differential, Includes Parasitic			1		pF
$R_{OUTDIFF}$	Output Resistance (+OUT, –OUT)	Differential	●	18	25	32	Ω
$R_{OUTFDIFF}$	Filtered Output Resistance (+OUTF, –OUTF)	Differential	●	85	100	115	Ω
$C_{OUTFDIFF}$	Filtered Output Capacitance (+OUTF, –OUTF)	Differential, Includes Parasitic			2.7		pF
CMRR	Common Mode Rejection Ratio	Input Common Mode Voltage 1.1V~1.7V	●	40	62		dB
Output Common Mode Voltage Control							
G_{CM}	Common Mode Gain	V_{OCM} = 1V to 1.6V			1		V/V
V_{OCMMIN}	Output Common Mode Range, MIN		 ●			1 1.1	V V
V_{OCMMAX}	Output Common Mode Range, MAX		 ●	1.6 1.5			V V
V_{OSCM}	Common Mode Offset Voltage	V_{OCM} = 1.1V to 1.5V	●	–15		15	mV
TCV_{OSCM}	Common Mode Offset Voltage Drift	T_{MIN} to T_{MAX}	●		9		µV/°C
IV_{OCM}	V_{OCM} Input Current		●		4	15	µA
$\overline{ENABLE}$ Pin							
V_{IL}	$\overline{ENABLE}$ Input Low Voltage		●			0.8	V
V_{IH}	$\overline{ENABLE}$ Input High Voltage		●	2.4			V
I_{IL}	$\overline{ENABLE}$ Input Low Current	$\overline{ENABLE}$ = 0.8V	●			0.5	µA
I_{IH}	$\overline{ENABLE}$ Input High Current	$\overline{ENABLE}$ = 2.4V	●		1.3	3	µA
Power Supply							
V_S	Operating Supply Range		●	2.85	3	3.5	V
I_S	Supply Current	$\overline{ENABLE}$ = 0.8V	●	70	85	96	mA
I_{SHDN}	Shutdown Supply Current	$\overline{ENABLE}$ = 2.4V, Input and Output Floating	●		0.9	3	mA
PSRR	Power Supply Rejection Ratio (Differential Outputs)	V^+ = 2.85V to 3.5V	●	55	76		dB

AC ELECTRICAL CHARACTERISTICS

Specifications are at T_A = 25°C. V^+ = 3V, V^- = 0V, V_{OCM} = 1.25V, $\overline{ENABLE}$ = 0V, No R_L unless otherwise noted.

SYMBOL	PARAMETER	CONDITIONS	MIN	TYP	MAX	UNITS
–3dBBW	–3dB Bandwidth	200mV$_{P-P, OUT}$ (Note 6)	1.2	2.37		GHz
0.1dBBW	Bandwidth for 0.1dB Flatness	200mV$_{P-P, OUT}$ (Note 6)		200		MHz
0.5dBBW	Bandwidth for 0.5dB Flatness	200mV$_{P-P, OUT}$ (Note 6)		377		MHz
1/f	1/f Noise Corner			15		kHz
SR	Slew Rate	Differential (Note 6)		6000		V/µs
$t_{S1\%}$	1% Settling Time	2V$_{P-P, OUT}$ (Note 6)		1.7		ns
t_{OVDR}	Overdrive Recovery Time	1.9V$_{P-P, OUT}$ (Note 6)		17		ns
t_{ON}	Turn-On Time	Differential Output Reaches 90% of Steady State Value		10		ns
t_{OFF}	Turn-Off Time	Differential Output Drops to 10% of Original Value		12		ns
–3dBBW$_{VOCM}$	V_{OCM} Pin Small Signal –3dB BW	0.1V$_{P-P}$ at V_{OCM}, Measured Single-Ended at Output (Note 6)		16		MHz
10MHz Input Signal						
HD2,10M/HD3,10M	Second/Third Order Harmonic Distortion	2V$_{P-P, OUT}$, R_L = 200Ω		–107/–96		dBc
		2V$_{P-P, OUT}$, No R_L		–110/–108		dBc
IMD3,10M	Third-Order Intermodulation (f1 = 9.5MHz f2 = 10.5MHz)	2V$_{P-P, OUT}$ Composite, R_L = 200Ω		–99		dBc
		2V$_{P-P, OUT}$ Composite, No R_L		–110		dBc
OIP3,10M	Third-Order Output Intercept Point (f1 = 9.5MHz f2 = 10.5MHz)	2V$_{P-P, OUT}$ Composite, No R_L (Note 7)		59.1		dBm
P1dB,10M	1dB Compression Point	R_L = 375Ω (Notes 5, 7)		17.8		dBm
NF10M	Noise Figure	R_L = 375Ω (Note 5)		7.5		dB
$e_{IN,10M}$	Input Referred Voltage Noise Density	Includes Resistors (Short Inputs)		2.5		nV/√Hz
$e_{ON,10M}$	Output Referred Voltage Noise Density	Includes Resistors (Short Inputs)		13		nV/√Hz
70MHz Input Signal						
HD2,70M/HD3,70M	Second/Third Order Harmonic Distortion	2V$_{P-P, OUT}$, R_L = 200Ω		–86/–85		dBc
		2V$_{P-P, OUT}$, No R_L		–89/–94		dBc
IMD3,70M	Third-Order Intermodulation (f1 = 69.5MHz f2 = 70.5MHz)	2V$_{P-P, OUT}$ Composite, R_L = 200Ω		–91		dBc
		2V$_{P-P, OUT}$ Composite, No R_L		–97		dBc
OIP3,70M	Third-Order Output Intercept Point (f1 = 69.5MHz f2 = 70.5MHz)	2V$_{P-P, OUT}$ Composite, No R_L (Note 7)		52.4		dBm
P1dB,70M	1dB Compression Point	R_L = 375Ω (Notes 5, 7)		18.5		dBm
NF70M	Noise Figure	R_L = 375Ω (Note 5)		7.5		dB
$e_{IN,70M}$	Input Referred Voltage Noise Density	Includes Resistors (Short Inputs)		2.5		nV/√Hz
$e_{ON,70M}$	Output Referred Voltage Noise Density	Includes Resistors (Short Inputs)		12.5		nV/√Hz

AC ELECTRICAL CHARACTERISTICS

Specifications are at T_A = 25°C. V^+ = 3V, V^- = 0V, V_{OCM} = 1.25V, $\overline{ENABLE}$ = 0V, No R_L unless otherwise noted.

SYMBOL	PARAMETER	CONDITIONS	MIN	TYP	MAX	UNITS
140MHz Input Signal						
HD2,140M/HD3,140M	Second/Third Order Harmonic Distortion	$2V_{P-P, OUT}$, R_L = 200Ω		–78/–74		dBc
		$2V_{P-P, OUT}$, No R_L		–81/–79		dBc
IMD3,140M	Third-Order Intermodulation (f1 = 139.5MHz f2 = 140.5MHz)	$2V_{P-P, OUT}$ Composite, R_L = 200Ω		–80		dBc
		$2V_{P-P, OUT}$ Composite, No R_L		–85		dBc
OIP3,140M	Third-Order Output Intercept Point (f1 = 139.5MHz f2 = 140.5MHz)	$2V_{P-P, OUT}$ Composite, No R_L (Notes 7)		46.5		dBm
P1dB,140M	1dB Compression Point	R_L = 375Ω (Notes 5, 7)		18.8		dBm
NF140M	Noise Figure	R_L = 375Ω (Note 5)		7.7		dB
$e_{IN,140M}$	Input Referred Voltage Noise Density	Includes Resistors (Short Inputs)		2.5		nV/√Hz
$e_{ON,140M}$	Output Referred Voltage Noise Density	Includes Resistors (Short Inputs)		12.6		nV/√Hz
240MHz Input Signal						
HD2,240M/HD3,240M	Second/Third-Order Harmonic Distortion	$2V_{P-P, OUT}$, R_L = 200Ω		–63/–57		dBc
		$2V_{P-P, OUT}$, No R_L		–67/–63		dBc
IMD3, 240M	Third-Order Intermodulation (f1 = 239.5MHz f2 = 240.5MHz)	$2V_{P-P, OUT}$ Composite, R_L = 200Ω		–68		dBc
		$2V_{P-P, OUT}$ Composite, No R_L		–71		dBc
OIP3, 240M	Third-Order Output Intercept Point (f1 = 239.5MHz f2 = 240.5MHz)	$2V_{P-P, OUT}$ Composite, No R_L (Note 7)		39.6		dBm
P1dB, 240M	1dB Compression Point	R_L = 375Ω (Notes 5, 7)		17.9		dBm
NF240M	Noise Figure	R_L = 375Ω (Note 5)		8		dB
$e_{N, 240M}$	Input Referred Voltage Noise Density	Includes Resistors (Short Inputs)		2.5		nV/√Hz
$e_{ON, 240M}$	Output Referred Voltage Noise Density	Includes Resistors (Short Inputs)		12.9		nV/√Hz

AC ELECTRICAL CHARACTERISTICS

Specifications are at T_A = 25°C. V^+ = 3V, V^- = 0V, V_{OCM} = 1.25V, $\overline{ENABLE}$ = 0V, No R_L unless otherwise noted.

SYMBOL	PARAMETER	CONDITIONS	MIN	TYP	MAX	UNITS
300MHz Input Signal						
HD2,300M/HD3,300M	Second/Third-Order Harmonic Distortion	$2V_{P-P, OUT}$, R_L = 200Ω		–61/–51		dBc
		$2V_{P-P, OUT}$, No R_L		–61/–55		dBc
IMD3,300M	Third-Order Intermodulation (f1 = 299.5MHz f2 = 300.5MHz)	$2V_{P-P, OUT}$ Composite, R_L = 200Ω		–62		dBc
		$2V_{P-P, OUT}$ Composite, No R_L		–66		dBc
OIP3,300M	Third-Order Output Intercept Point (f1 = 299.5MHz f2 = 300.5MHz)	$2V_{P-P, OUT}$ Composite, No R_L (Note 7)		36.9		dBm
P1dB,300M	1dB Compression Point	R_L = 375Ω (Notes 5, 7)		17.4		dBm
NF300M	Noise Figure	R_L = 375Ω (Note 5)		8.2		dB
$e_{N, 300M}$	Input Referred Voltage Noise Density	Includes Resistors (Short Inputs)		2.5		$nV/\sqrt{Hz}$
$e_{ON, 300M}$	Output Referred Voltage Noise Density	Includes Resistors (Short Inputs)		13.9		$nV/\sqrt{Hz}$
IMD3,280M/320M	Third-Order Intermodulation (f1 = 280MHz f2 = 320MHz) Measured at 360MHz	$2V_{P-P, OUT}$ Composite, R_L = 375Ω		–63	–55	dBc

Note 1: Stresses beyond those listed under Absolute Maximum Ratings may cause permanent damage to the device. Exposure to any Absolute Maximum Rating condition for extended periods may affect device reliability and lifetime.

Note 2: Input pins (+IN, –IN) are protected by steering diodes to either supply. If the inputs go beyond either supply rail, the input current should be limited to less than 10mA.

Note 3: The LTC6400C and LTC6400I are guaranteed functional over the operating temperature range of –40°C to 85°C.

Note 4: The LTC6400C is guaranteed to meet specified performance from 0°C to 70°C. It is designed, characterized and expected to meet specified performance from –40 to 85°C but is not tested or QA sampled at these temperatures. The LTC6400I is guaranteed to meet specified performance from –40°C to 85°C.

Note 5: Input and output baluns used. See Test Circuit A.

Note 6: Measured using Test Circuit B.

Note 7: Since the LTC6400-14 is a feedback amplifier with low output impedance, a resistive load is not required when driving an AD converter. Therefore, typical output power is very small. In order to compare the LTC6400-14 with amplifiers that require 50Ω output load, the LTC6400-14 output voltage swing driving a given R_L is converted to OIP3 and P_{1dB} as if it were driving a 50Ω load. Using this modified convention, $2V_{P-P}$ is by definition equal to 10dBm, regardless of actual R_L.

TYPICAL PERFORMANCE CHARACTERISTICS

Frequency Response

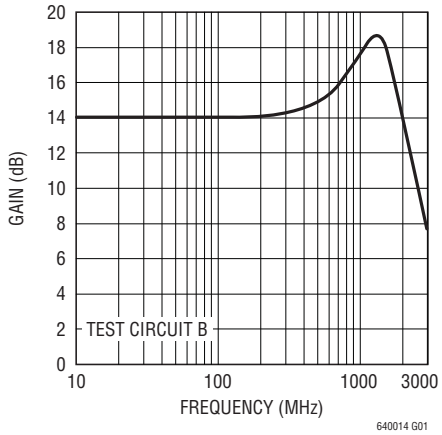

Gain 0.1dB Flatness

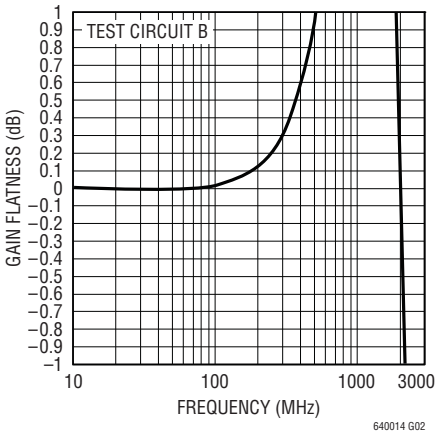

S21 Phase and Group Delay vs Frequency

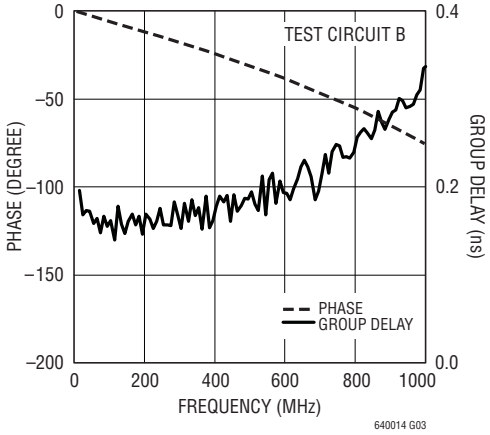

Input and Output Reflection and Reverse Isolation vs Frequency

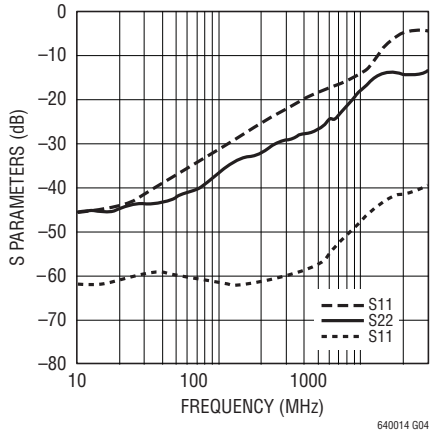

Input and Output Impedance vs Frequency

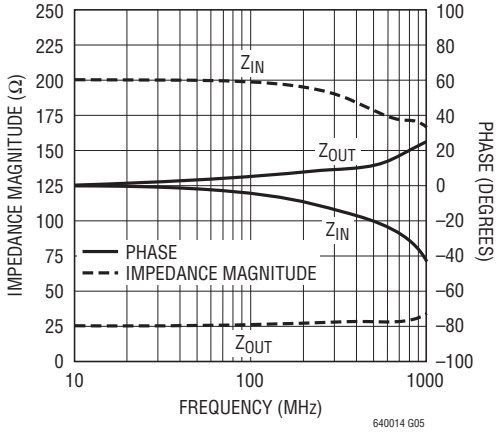

PSRR and CMRR vs Frequency

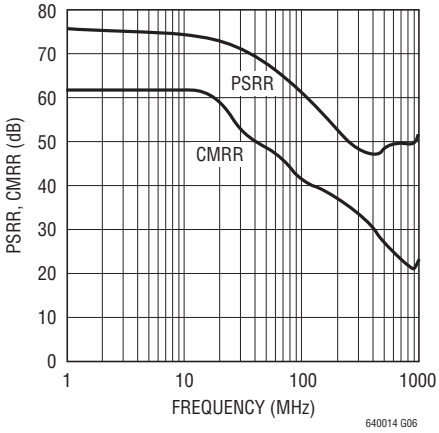

Noise Figure and Input Referred Noise Voltage vs Frequency

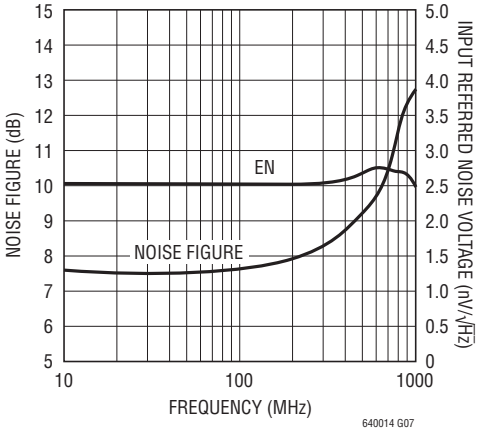

Small Signal Transient Response

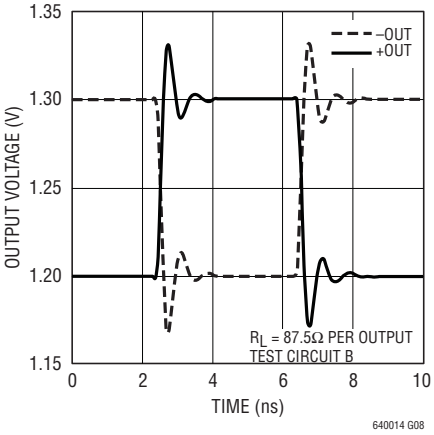

Large Signal Transient Response

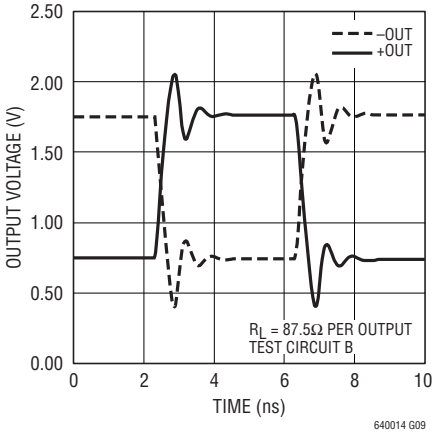

TYPICAL PERFORMANCE CHARACTERISTICS

Overdrive Recovery Response

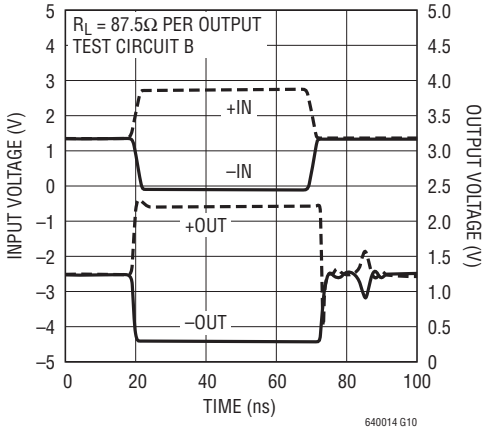

1% Settling Time for 2V Output Step

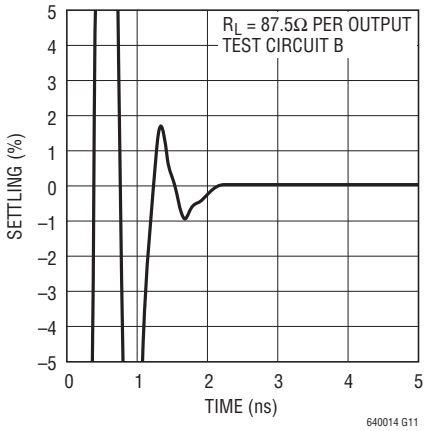

Harmonic Distortion vs Frequency

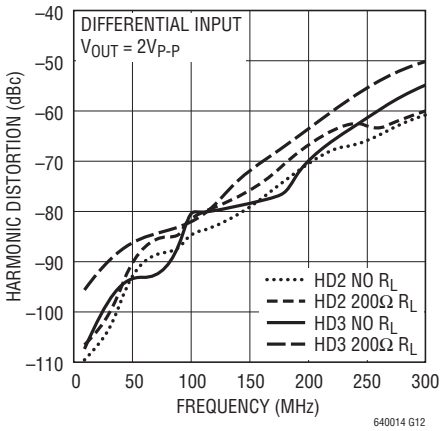

Third Order Intermodulation Distortion vs Frequency

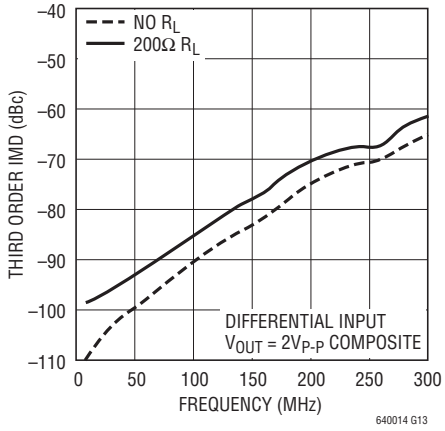

Harmonic Distortion vs Frequency

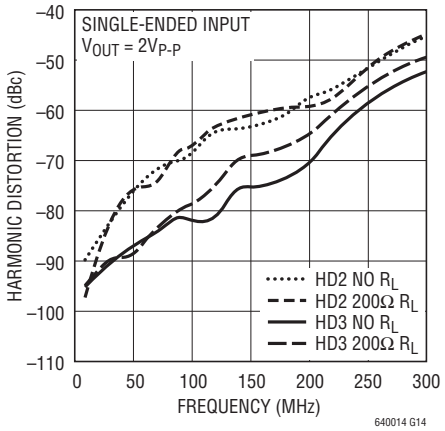

Third Order Intermodulation Distortion vs Frequency

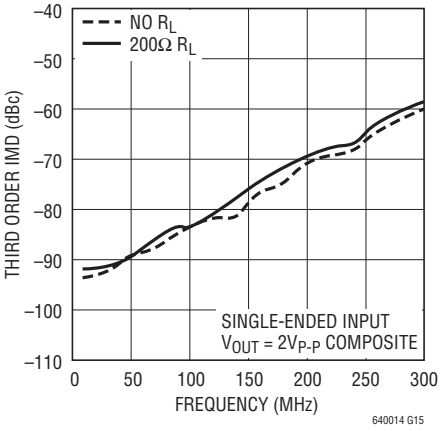

TYPICAL PERFORMANCE CHARACTERISTICS

Equivalent Output 1dB Compression Point vs Frequency

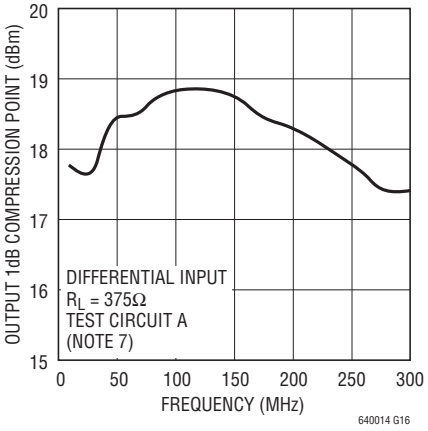

Equivalent Output Third Order Intercept vs Frequency

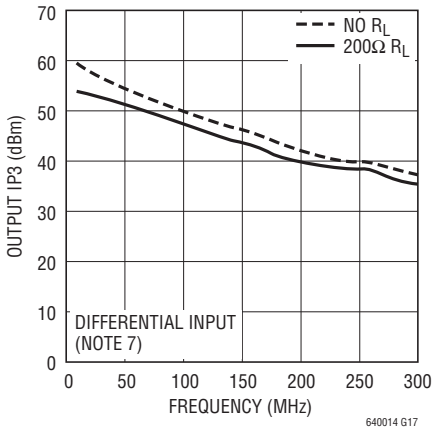

IMD3 vs V_{ICM} and V_{OCM}

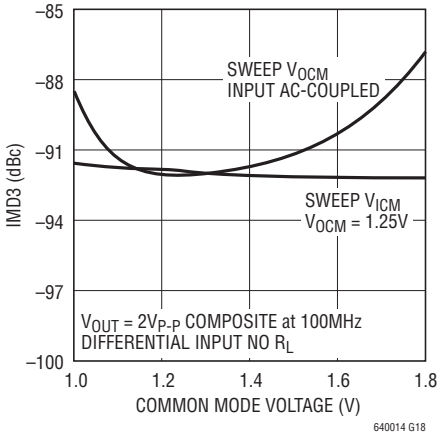

Turn-On Time

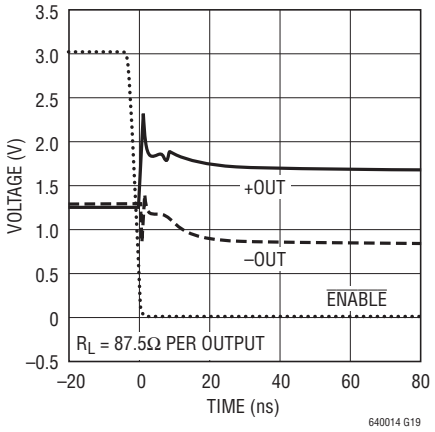

Turn-Off Time

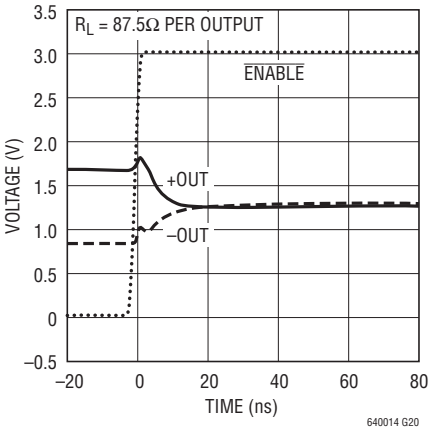

PIN FUNCTIONS

V^+ (Pins 1, 3, 10): Positive Power Supply (Normally tied to 3V or 3.3V). All three pins must be tied to the same voltage. Bypass each pin with 1000pF and 0.1µF capacitors as close to the pins as possible.

V_{OCM} (Pin 2): This pin sets the output common mode voltage. A 0.1µF external bypass capacitor is recommended.

V^- (Pins 4, 9, 12, 17): Negative Power Supply (GND). All four pins must be connected to same voltage/ground.

–OUT, +OUT (Pins 5, 8): Unfiltered Outputs. These pins have series resistors, R_{OUT} 12.5Ω.

–OUTF, +OUTF (Pins 6, 7): Filtered Outputs. These pins have 50Ω series resistors and a 2.7pF shunt capacitor.

$\overline{\text{ENABLE}}$ (Pin 11): This pin is a logic input referenced to V_{EE}. If low, the part is enabled. If high, the part is disabled and draws approximately 1mA supply current.

+IN (Pins 13, 14): Positive Input. Pins 13 and 14 are internally shorted together.

–IN (Pins 15, 16): Negative Input. Pins 15 and 16 are internally shorted together.

Exposed Pad (Pin 17): V^-. The Exposed Pad must be connected to same voltage/ground as pins 4, 9, 12.

BLOCK DIAGRAM

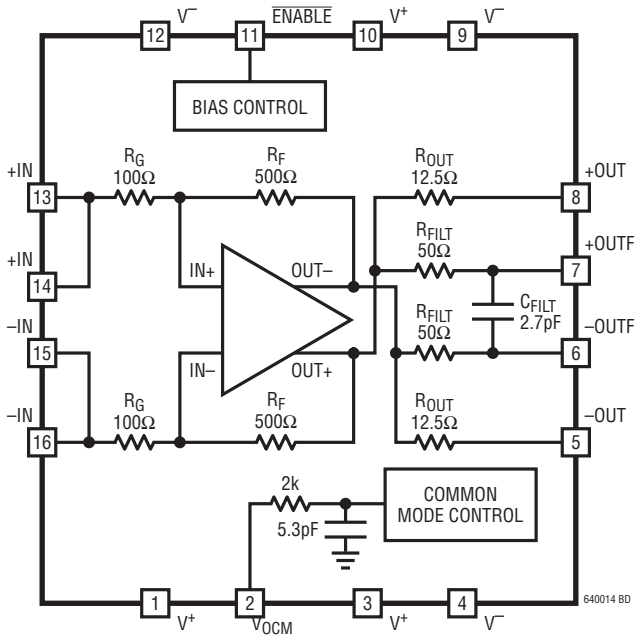

APPLICATIONS INFORMATION

Circuit Operation

The LTC6400-14 is a low noise and low distortion fully differential op amp/ADC driver with:

- Operation from DC to 2.4GHz (–3dB bandwidth)
- Fixed gain of 5V/V (14dB)
- Differential input impedance 200Ω
- Differential output impedance 25Ω
- On-Chip 590MHz output filter

The LTC6400 is composed of a fully differential amplifier with on chip feedback and output common mode voltage control circuitry. Differential gain and input impedance are set by 100Ω/1000Ω resistors in the feedback network. Small output resistors of 12.5Ω improve the circuit stability over various load conditions. They also provide a possible external filtering option, which is often desirable when the load is an ADC.

Filter resistors of 50Ω are available for additional filtering. Lowpass/bandpass filters are easily implemented with just a couple of external components. Moreover, they offer single-ended 50Ω matching in wideband applications and no external resistor is needed.

The LTC6400-14 is very flexible in terms of I/O coupling. It can be AC- or DC-coupled at the inputs, the outputs or both. Due to the internal connection between input and output, users are advised to keep input common mode voltage between 1V and 1.8V for proper operation. If the inputs are AC-coupled, the input common mode voltage is automatically biased approximately 450mV above V_{OCM} and thus no external circuitry is needed for bias. The LTC6400-14 provides an output common mode voltage set by V_{OCM}, which allows driving an ADC directly without external components such as a transformer or AC coupling capacitors. The input signal can be either single-ended or differential with only minor differences in distortion performance.

Input Impedance and Matching

The differential input impedance of the LTC6400-14 is 200Ω. If a 200Ω source impedance is unavailable, then the differential inputs may need to be terminated to a lower value impedance, e.g. 50Ω, in order to provide an impedance match for the source. Several choices are available. One approach is to use a differential shunt resistor (Figure 1). Another approach is to employ a wide band transformer (Figure 2). Both methods provide a wide band impedance match. The termination resistor or the transformer must be placed close to the input pins in order to minimize the reflection due to input mismatch. Alternatively, one could apply a narrowband impedance match at the inputs of the LTC6400-14 for frequency selection and/or noise reduction.

Referring to Figure 3, LTC6400-14 can be easily configured for single-ended input and differential output without a balun. The signal is fed to one of the inputs through a matching network while the other input is connected to the same matching network and a source resistor. Because the return ratios of the two feedback paths are equal, the two outputs have the same gain and thus symmetrical swing.

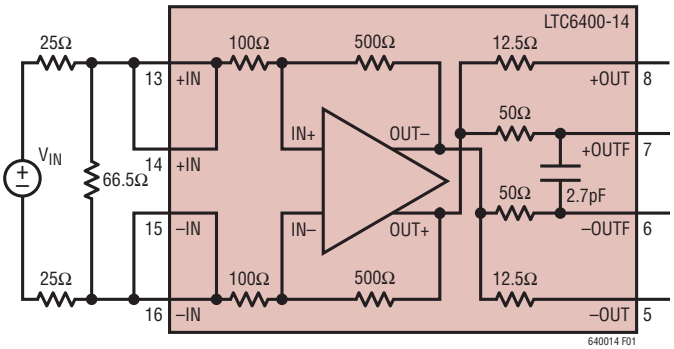

Figure 1. Input Termination for Differential 50Ω Input Impedance Using Shunt Resistor

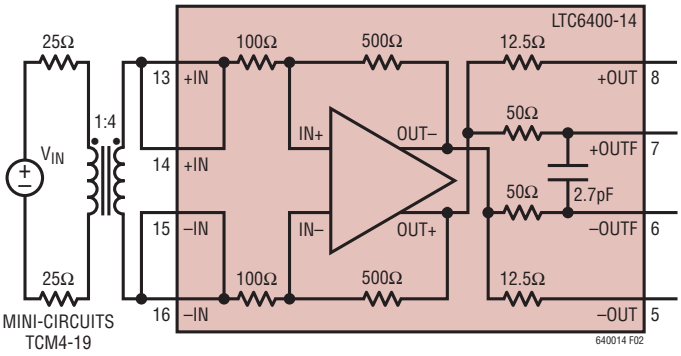

Figure 2. Input Termination for Differential 50Ω Input Impedance Using a 1:4 Balun

APPLICATIONS INFORMATION

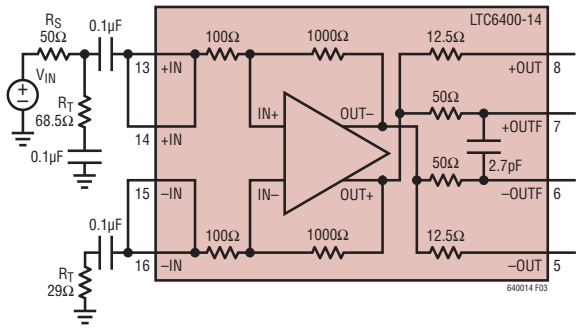

Figure 3. Input Termination for Single-Ended 50Ω Input Impedance

In general, the single-ended input impedance and termination resistor R_T are determined by the combination of R_S, R_G and R_F. For example, when R_S is 50Ω, it is found that the single-ended input impedance is 202Ω and R_T is 68.5Ω in order to match to a 50Ω source impedance.

The LTC6400-14 is unconditionally stable under normal bias conditions. However, the overall differential gain is affected by both source impedance and load impedance as shown in Figure 4:

$$A_V = \left|\frac{V_{OUT}}{V_{IN}}\right| = \frac{1000}{R_S + 200} \bullet \frac{R_L}{25 + R_L}$$

The noise performance of the LTC6400-14 also depends upon the source impedance and termination. For example, an input 1:4 balun transformer in Figure 2 improves SNR by adding 6dB of voltage gain at the inputs. A trade-off between gain and noise is obvious when constant noise figure circle and constant gain circle are plotted within the same input Smith Chart, based on which users can choose the optimal source impedance for a given gain and noise requirement.

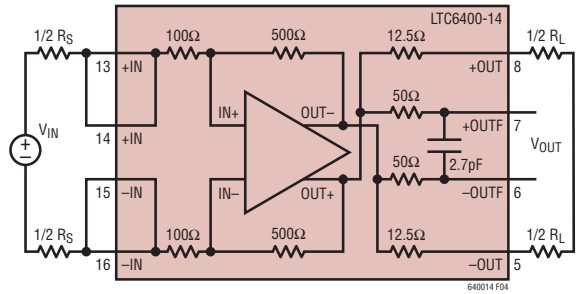

Figure 4. Calculate Differential Gain

Output Match and Filter

The LTC6400-14 can drive an ADC directly without external output impedance matching. Alternatively, the differential output impedance of 25Ω can be matched to higher value impedance, e.g. 50Ω, by series resistors or an LC network.

The internal low pass filter outputs at +OUTF/–OUTF have a –3dB bandwidth of 590MHz. External capacitors can reduce the low pass filter bandwidth as shown in Figure 5. A bandpass filter is easily implemented with only a few components as shown in Figure 6. Three 39pF capacitors and a 16nH inductor create a bandpass filter with 165MHz center frequency, –3dB frequencies at 138MHz and 200MHz.

Output Common Mode Adjustment

The output common mode voltage is set by the V_{OCM} pin, which is a high impedance input. The output common mode voltage is capable of tracking V_{OCM} in a range from 1V to 1.6V. The bandwidth of V_{OCM} control is typically 16MHz,

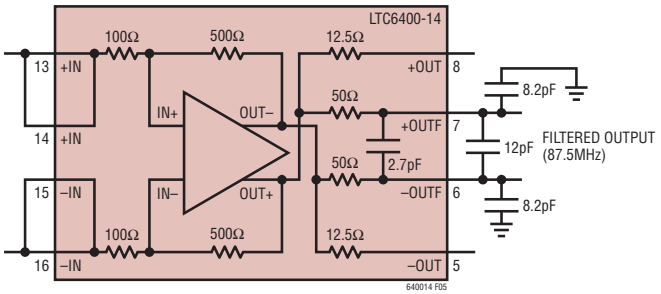

Figure 5. LTC6400-14 Internal Filter Topology Modified for Low Filter Bandwidth (Three External Capacitors)

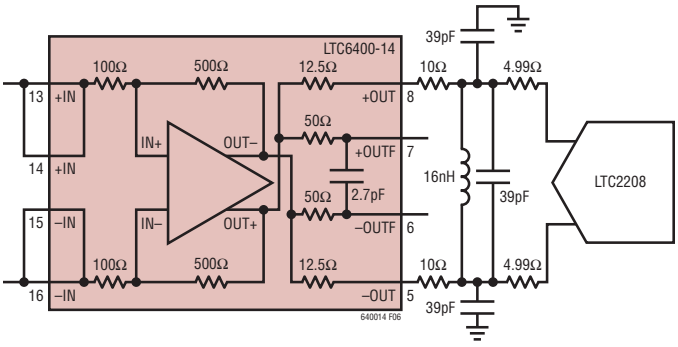

Figure 6. LTC6400-14 Internal Filter Topology Modified for Bandpass Filtering (Three External Capacitors, One External Inductor)

APPLICATIONS INFORMATION

which is dominated by a low pass filter connected to the V_{OCM} pin and is aimed to reduce common mode noise generation at the outputs. The internal common mode feedback loop has a –3dB bandwidth around 400MHz, allowing fast common mode rejection at the outputs of the LTC6400-14. The V_{OCM} pin should be tied to a DC bias voltage with a 0.1µF bypass capacitor. When interfacing with A/D converters such as the LTC22xx families, the V_{OCM} pin can be connected to the V_{CM} pin of the ADC.

Driving A/D Converters

The LTC6400-14 has been specifically designed to interface directly with high speed A/D converters. In Figure 7, an example schematic shows the LTC6400-14 with a single-ended input driving the LTC2208, which is a 16-bit, 130Msps ADC. Two external 4.99Ω resistors help eliminate potential resonance associated with stray capacitance of PCB traces and bond wires of either the ADC input or the driver output. V_{OCM} of the LTC6400-14 is connected to V_{CM} of the LTC2208 V_{CM} pin at 1.25V. Alternatively, a single-ended input signal can be converted to a differential signal via a balun and fed to the input of the LTC6400-14.

Figure 8 summarizes the IMD3 of the whole system in Figure 7. Note that Figure 7 shows a direct connection to the LTC2208, but in many applications an anti-alias filter would be desirable to limit the wideband noise of the amplifier. This is especially true in high performance 16-bit designs.

Test Circuits

Due to the fully-differential design of the LTC6400 and its usefulness in applications with differing characteristic

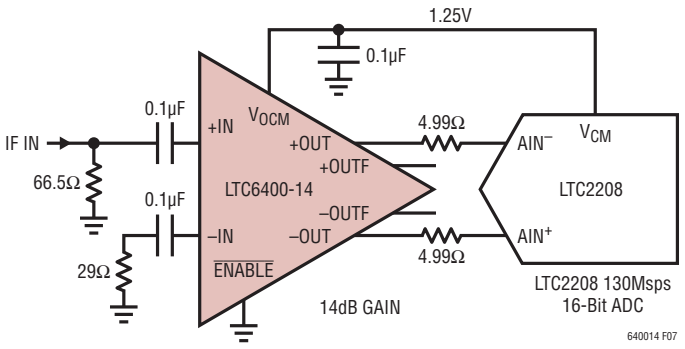

Figure 7. Single-Ended Input to LTC6400-14 and LTC2208

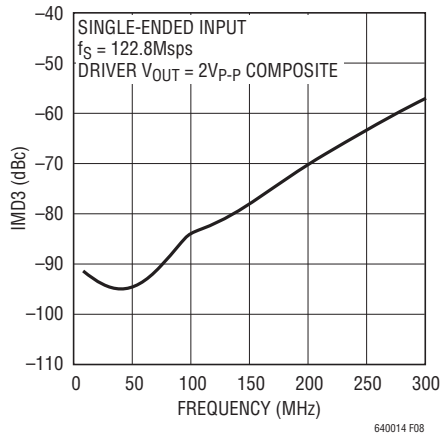

Figure 8. IMD3 for the Combination of LTC6400-14 and LTC2208

specifications, two test circuits are used to generate the information in this datasheet. Test Circuit A is DC987B, a two-port demonstration circuit for the LTC6400 family. The schematic and silkscreen are shown below. This circuit includes input and output transformers (baluns) for single-ended-to-differential conversion and impedance transformation, allowing direct hook-up to a 2-port

Top Silkscreen

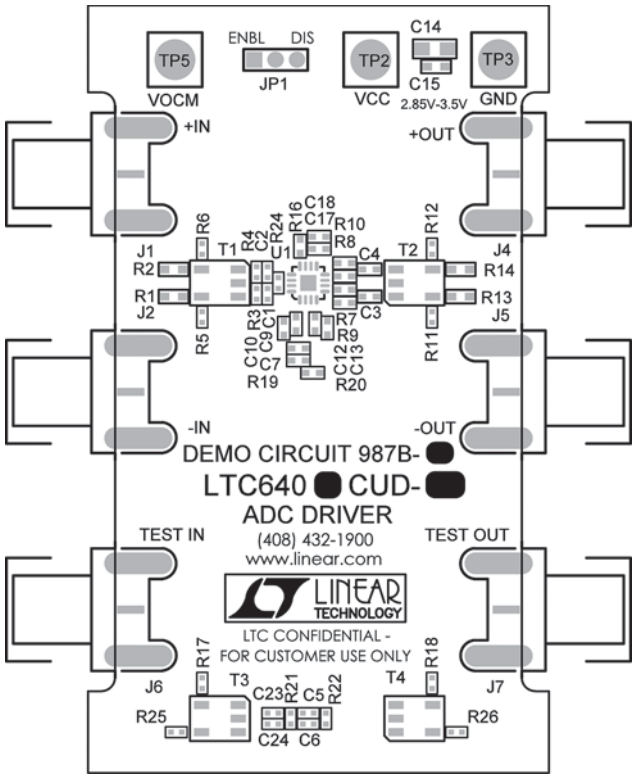

APPLICATIONS INFORMATION

network analyzer. There are also series resistors at the output to present the LTC6400 with a 375Ω differential load, optimizing distortion performance. Due to the input and output transformers, the –3dB bandwidth is reduced from 2.4GHz to approximately 1.8GHz.

Test Circuit B uses a 4-port network analyzer to measure S-parameters and gain/phase response. This removes the effects of the wideband baluns and associated circuitry, for a true picture of the >1GHz S-parameters and AC characteristics.

TYPICAL APPLICATIONS

Demo Circuit 987B Schematic (Test Circuit A)

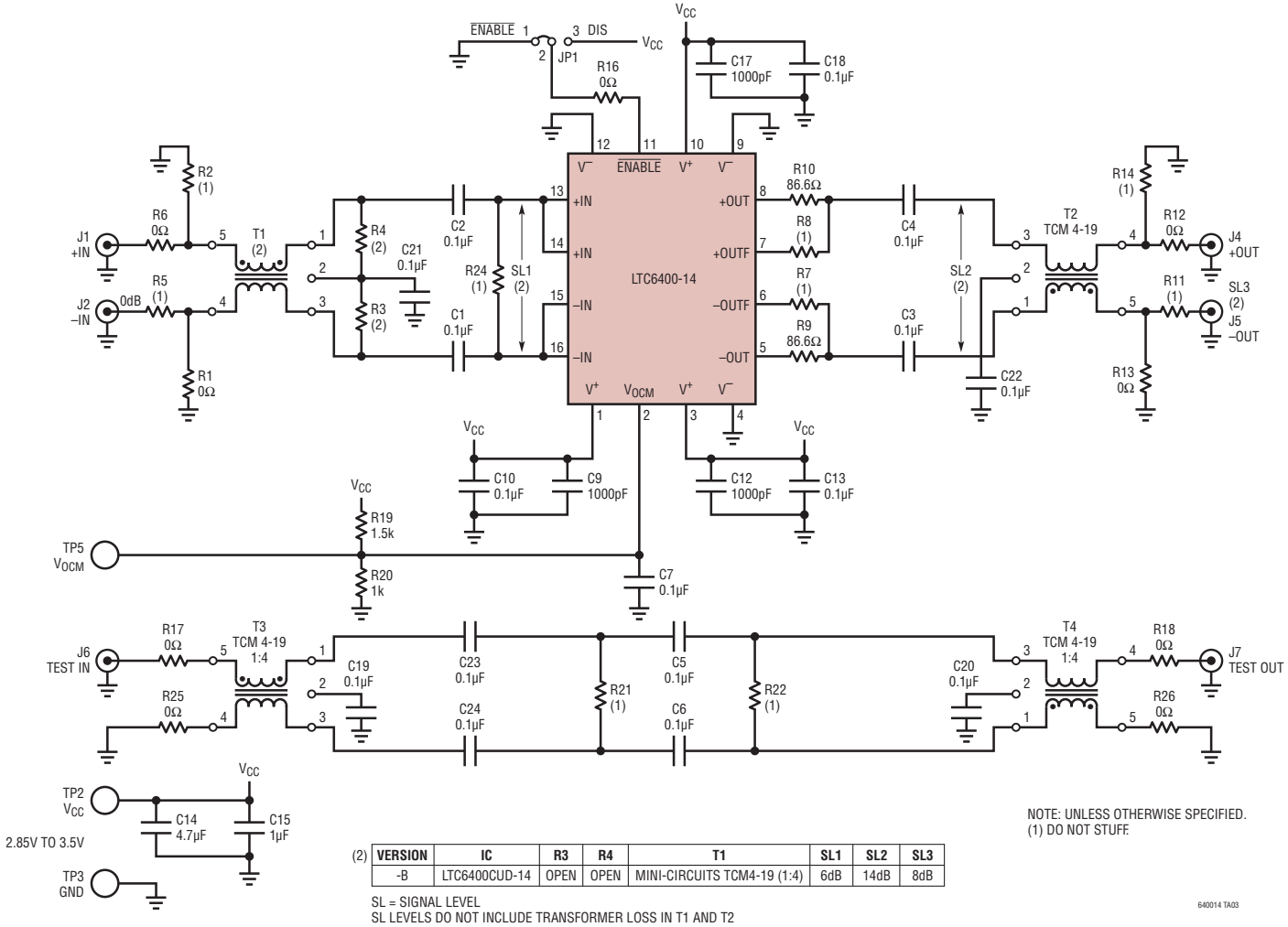

(2)

VERSION	IC	R3	R4	T1	SL1	SL2	SL3
-B	LTC6400CUD-14	OPEN	OPEN	MINI-CIRCUITS TCM4-19 (1:4)	6dB	14dB	8dB

SL = SIGNAL LEVEL
SL LEVELS DO NOT INCLUDE TRANSFORMER LOSS IN T1 AND T2

NOTE: UNLESS OTHERWISE SPECIFIED.
(1) DO NOT STUFF.

640014 TA03

TYPICAL APPLICATIONS

Test Circuit B, 4-Port Analysis

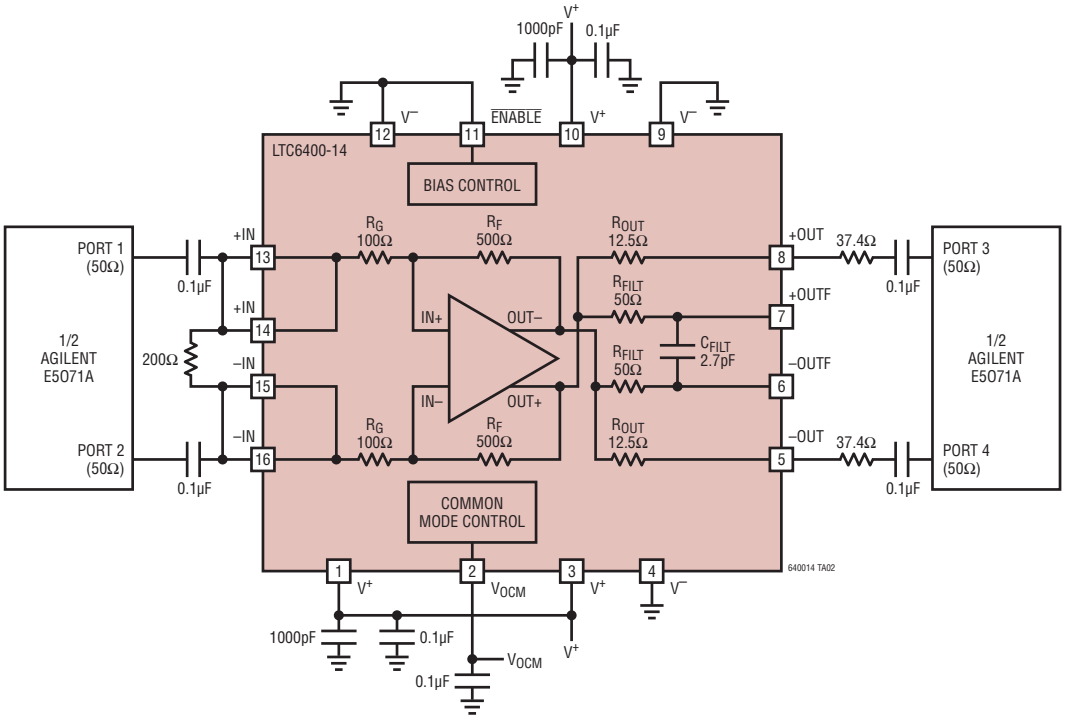

PACKAGE DESCRIPTION

UD Package
16-Lead Plastic QFN (3mm × 3mm)
(Reference LTC DWG # 05-08-1691)

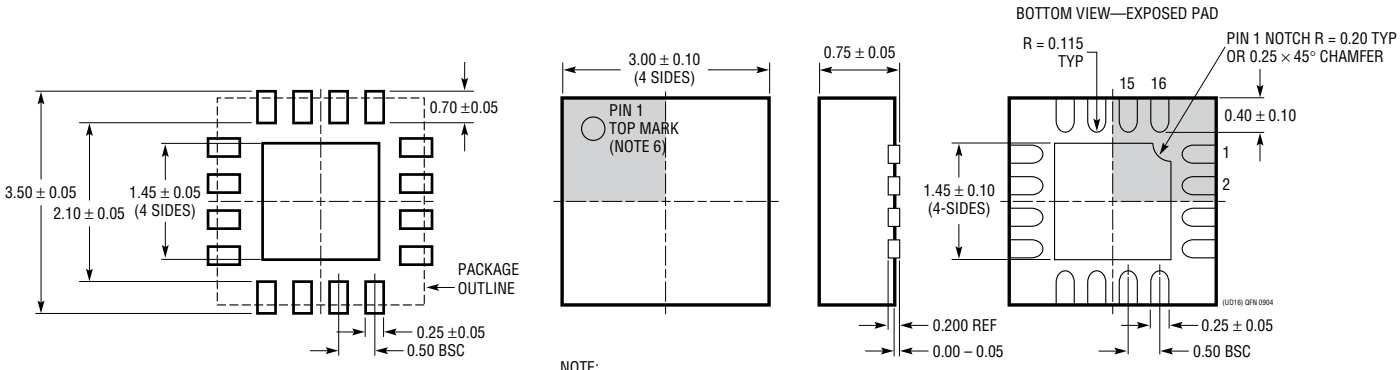

NOTE:
1. DRAWING CONFORMS TO JEDEC PACKAGE OUTLINE MO-220 VARIATION (WEED-2)
2. DRAWING NOT TO SCALE
3. ALL DIMENSIONS ARE IN MILLIMETERS
4. DIMENSIONS OF EXPOSED PAD ON BOTTOM OF PACKAGE DO NOT INCLUDE MOLD FLASH. MOLD FLASH, IF PRESENT, SHALL NOT EXCEED 0.15mm ON ANY SIDE
5. EXPOSED PAD SHALL BE SOLDER PLATED
6. SHADED AREA IS ONLY A REFERENCE FOR PIN 1 LOCATION ON THE TOP AND BOTTOM OF PACKAGE

Information furnished by Linear Technology Corporation is believed to be accurate and reliable. However, no responsibility is assumed for its use. Linear Technology Corporation makes no representation that the interconnection of its circuits as described herein will not infringe on existing patent rights.

RELATED PARTS

PART NUMBER	DESCRIPTION	COMMENTS
High-Speed Differential Amplifiers/Differential Op Amps		
LT®1993-2	800MHz Differential Amplifier/ADC Driver	A_V = 2V/V, OIP3 = 38dBm at 70MHz
LT1993-4	900MHz Differential Amplifier/ADC Driver	A_V = 4V/V, OIP3 = 40dBm at 70MHz
LT1993-10	700MHz Differential Amplifier/ADC Driver	A_V = 10V/V, OIP3 = 40dBm at 70MHz
LT1994	Low Noise, Low Distortion Differential Op Amp	16-Bit SNR and SFDR at 1MHz, Rail-to-Rail Outputs
LT5514	Ultralow Distortion IF Amplifier/ADC Driver with Digitally Controlled Gain	OIP3 = 47dBm at 100MHz, Gain Control Range 10.5dB to 33dB
LT5524	Low Distortion IF Amplifier/ADC Driver with Digitally Controlled Gain	OIP3 = 40dBm at 100MHz, Gain Control Range 4.5dB to 37dB
LTC6400-8	2.2GHz Low Noise, Low Distortion, Differential ADC Driver	A_V = 8dB, 85mA Supply Current, IMD3 = –61dBc at 300MHz
LTC6400-20	1.8GHz Low Noise, Low Distortion, Differential ADC Driver	A_V = 20dB, 90mA Supply Current, IMD3 = –65dBc at 300MHz
LTC6400-26	1.9GHz Low Noise, Low Distortion, Differential ADC Driver	A_V = 26dB, 85mA Supply Current, IMD3 = –71dBc at 300MHz
LTC6401-8	2.2GHz Low Noise, Low Distortion, Differential ADC Driver	A_V = 8dB, 45mA Supply Current, IMD3 = –80dBc at 140MHz
LTC6401-14	2GHz Low Noise, Low Distortion, Differential ADC Driver	A_V = 14dB, 45mA Supply Current, IMD3 = –81dBc at 140MHz
LTC6401-20	1.3GHz Low Noise, Low Distortion, Differential ADC Driver	A_V = 20dB, 50mA Supply Current, IMD3 = –74dBc at 140MHz
LTC6401-26	1.6GHz Low Noise, Low Distortion, Differential ADC Driver	A_V = 26dB, 45mA Supply Current, IMD3 = –72dBc at 140MHz
LT6402-6	300MHz Differential Amplifier/ADC Driver	A_V = 6dB, Distortion < –80dBc at 25MHz
LT6402-12	300MHz Differential Amplifier/ADC Driver	A_V = 12dB, Distortion < –80dBc at 25MHz
LT6402-20	300MHz Differential Amplifier/ADC Driver	A_V = 20dB, Distortion < –80dBc at 25MHz
LTC6404-1	600MHz Low Noise Differential ADC Driver	e_n = 1.5nV/$\sqrt{Hz}$, Rail-to-Rail Outputs
LTC6406	3GHz Rail-to-Rail Input Differential Op Amp	1.6nV/$\sqrt{Hz}$ Noise, –72dBc Distortion at 50MHz, 18mA
LT6411	Low Power Differential ADC Driver/Dual Selectable Gain Amplifier	16mA Supply Current, IMD3 = –83dBc at 70MHz, A_V = 1, –1 or 2
High-Speed Single-Ended Output Op Amps		
LT1812/LT1813/ LT1814	High Slew Rate Low Cost Single/Dual/Quad Op Amps	8nV/$\sqrt{Hz}$ Noise, 750V/µs, 3mA Supply Current
LT1815/LT1816/ LT1817	Very High Slew Rate Low Cost Single/Dual/Quad Op Amps	6nV/$\sqrt{Hz}$ Noise, 1500V/µs, 6.5mA Supply Current
LT1818/LT1819	Ultra High Slew Rate Low Cost Single/Dual Op Amps	6nV/$\sqrt{Hz}$ Noise, 2500V/µs, 9mA Supply Current
LT6200/LT6201	Rail-to-Rail Input and Output Low Noise Single/Dual Op Amps	0.95nV/$\sqrt{Hz}$ Noise, 165MHz GBW, Distortion = –80dBc at 1MHz
LT6202/LT6203/ LT6204	Rail-to-Rail Input and Output Low Noise Single/Dual/Quad Op Amps	1.9nV/$\sqrt{Hz}$ Noise, 3mA Supply Current, 100MHz GBW
LT6230/LT6231/ LT6232	Rail-to-Rail Output Low Noise Single/Dual/Quad Op Amps	1.1nV/$\sqrt{Hz}$ Noise, 3.5mA Supply Current, 215MHz GBW
LT6233/LT6234/ LT6235	Rail-to-Rail Output Low Noise Single/Dual/Quad Op Amps	1.9nV/$\sqrt{Hz}$ Noise, 1.2mA Supply Current, 60MHz GBW
Integrated Filters		
LTC1562-2	Very Low Noise, 8th Order Filter Building Block	Lowpass and Bandpass Filters up to 300kHz
LT1568	Very Low Noise, 4th Order Filter Building Block	Lowpass and Bandpass Filters up to 10MHz
LTC1569-7	Linear Phase, Tunable 10th Order Lowpass Filter	Single-Resistor Programmable Cut-Off to 300kHz
LT6600-2.5	Very Low Noise Differential 2.5MHz Lowpass Filter	SNR = 86dB at 3V Supply, 4th Order Filter
LT6600-5	Very Low Noise Differential 5MHz Lowpass Filter	SNR = 82dB at 3V Supply, 4th Order Filter
LT6600-10	Very Low Noise Differential 10MHz Lowpass Filter	SNR = 82dB at 3V Supply, 4th Order Filter
LT6600-15	Very Low Noise Differential 15MHz Lowpass Filter	SNR = 76dB at 3V Supply, 4th Order Filter
LT6600-20	Very Low Noise Differential 20MHz Lowpass Filter	SNR = 76dB at 3V Supply, 4th Order Filter

Linear Technology Corporation
1630 McCarthy Blvd., Milpitas, CA 95035-7417
(408) 432-1900 • FAX: (408) 434-0507 • www.linear.com
LT 0908 REV B • PRINTED IN USA
© LINEAR TECHNOLOGY CORPORATION 2008