Single/Dual/Quad 18MHz, Low Noise, Rail-to-Rail Output, CMOS Op Amps

FEATURES

- **0.1Hz to 10Hz Noise: 550nV$_{P-P}$**
- **Input Bias Current:**
  0.2pA (Typ at 25°C)
  1pA Max (LT6240)
- **Low Offset Voltage: 125µV Max**
- Low Offset Drift: 2.5µV/°C Max
- Gain Bandwidth Product: 18MHz
- Output Swings Rail-to-Rail
- Supply Operation:
  2.8V to 6V LTC6240/LTC6241/LTC6242
  2.8V to ±5.5V LTC6240HV/LTC6241HV/LTC6242HV
- Low Input Capacitance
- H Grade Temperature Range: –40°C to 125°C
- Single LTC6240 in 5-Pin SOT-23 Package and 8-Pin SO for PCB Guard Ring
- Dual LTC6241 in 8-Pin SO and Tiny DFN Packages
- Quad LTC6242 in 16-Pin SSOP and 5mm × 3mm DFN Packages

APPLICATIONS

- Photo Diode Amplifiers
- Charge Coupled Amplifiers
- Low Noise Signal Processing
- Medical Instrumentation
- High Impedance Transducer Amplifier

DESCRIPTION

The LTC®6240/6241/LTC6242 are single, dual and quad low noise, low offset, rail-to-rail output, unity gain stable CMOS op amps that feature 1pA of input bias current. Input bias current is guaranteed to be 1pA max on the single LTC6240. The 0.1Hz to 10Hz noise of only 550nV$_{P-P}$, along with an offset of just 125µV are significant improvements over traditional CMOS op amps. Additionally, noise is guaranteed to be less than 10nV/$\sqrt{Hz}$ at 1kHz. An 18MHz gain bandwidth, and 10V/µs slew rate, along with the wide supply range and low input capacitance, make them perfect for use as fast signal processing amplifiers.

These op amps have an output stage that swings within 30mV of either supply rail to maximize the signal dynamic range in low supply applications. The input common mode range extends to the negative supply. They are fully specified on 3V and 5V, and an HV version guarantees operation on supplies up to ±5V.

The LTC6240 is available in the 8-pin SO and the 5-pin SOT-23 packages. The LTC6241 is available in the 8-pin SO, and for compact designs it is packaged in a tiny dual fine pitch leadless (DFN) package. The LTC6242 is available in the 16-Pin SSOP as well as the 5mm × 3mm DFN package.

LT, LTC and LT are registered trademarks of Linear Technology Corporation.
All other trademarks are the property of their respective owners.

TYPICAL APPLICATION

Low Noise Single-Ended Input to Differential Output Amplifier

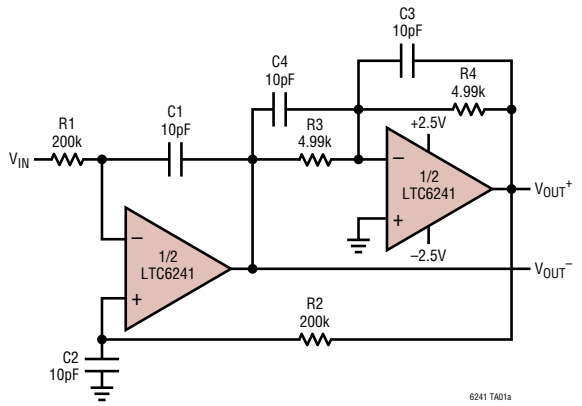

Noise Voltage vs Frequency

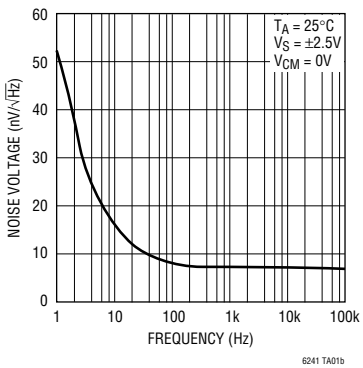

ABSOLUTE MAXIMUM RATINGS (Note 1)

Total Supply Voltage (V^+ to V^-)
- LTC6240/LTC6241/LTC6242 ..... 7V
- LTC6240HV/LTC6241HV/LTC6242HV 12V

Input Voltage..... (V^+ + 0.3V) to (V^- – 0.3V)
Input Current..... ±10mA
Output Short Circuit Duration (Note 2) ..... Indefinite
Operating Temperature Range
- LTC6240C/LTC6241C/LTC6242C..... –40°C to 85°C
- LTC6240I/LTC6241I/LTC6242I..... –40°C to 85°C
- LTC6240H/LTC6241H/LTC6242H..... –40°C to 125°C

Specified Temperature Range (Note 3)
- LTC6240C/LTC6241C/LTC6242C..... 0°C to 70°C
- LTC6240I/LTC6241I/LTC6242I..... –40°C to 85°C
- LTC6240H/LTC6241H/LTC6242H..... –40°C to 125°C

Junction Temperature ..... 150°C
- DHC, DD Package ..... 125°C

Storage Temperature Range.....–65°C to 150°C
- DHC, DD Package .....–65°C to 125°C

Lead Temperature (Soldering, 10 sec) ..... 300°C

PACKAGE/ORDER INFORMATION

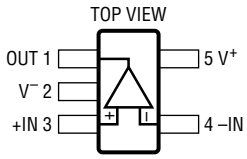

S5 PACKAGE
5-LEAD PLASTIC TSOT-23
T_{JMAX} = 150°C, θ_{JA} = 250°C/W

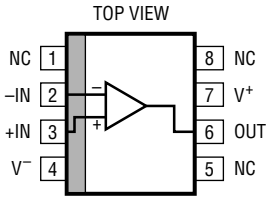

S8 PACKAGE
8-LEAD PLASTIC SO
T_{JMAX} = 150°C, θ_{JA} = 190°C/W

ORDER PART NUMBER	S5 PART MARKING*
LTC6240CS5	LTCRR
LTC6240HVCS5	LTCRS
LTC6240IS5	LTCRR
LTC6240HVIS5	LTCRS
LTC6240HS5	LTCRR
LTC6240HVHS5	LTCRS

ORDER PART NUMBER	S8 PART MARKING
LTC6240CS8	6240
LTC6240HVCS8	6240HV
LTC6240IS8	6240I
LTC6240HVIS8	240HVI
LTC6240HS8	6240H
LTC6240HVHS8	240HVH

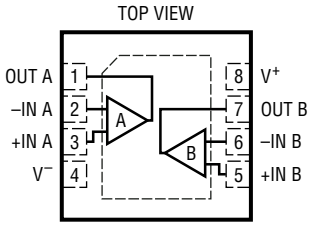

DD PACKAGE
8-LEAD (3mm × 3mm) PLASTIC DFN
T_{JMAX} = 125°C, θ_{JA} = 43°C/W
UNDERSIDE METAL CONNECTED TO V^-
(PCB CONNECTION OPTIONAL)

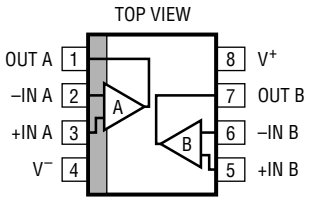

S8 PACKAGE
8-LEAD PLASTIC SO
T_{JMAX} = 150°C, θ_{JA} = 190°C/W

ORDER PART NUMBER	DD PART MARKING*
LTC6241CDD	LBPD
LTC6241HVCDD	LBRR
LTC6241IDD	LBPD
LTC6241HVIDD	LBRR

ORDER PART NUMBER	S8 PART MARKING
LTC6241CS8	6241
LTC6241HVCS8	6241HV
LTC6241IS8	6241I
LTC6241HVIS8	241HVI
LTC6241HS8	6241H
LTC6241HVHS8	241HVH

PACKAGE/ORDER INFORMATION

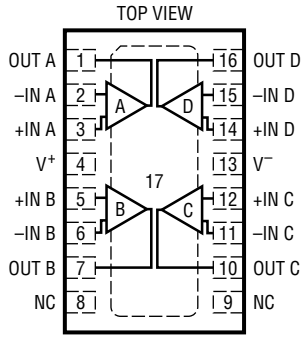

DHC16 PACKAGE
16-LEAD (5mm × 3mm) PLASTIC DFN
T_{JMAX} = 125°C, θ_{JA} = 43°C/W
UNDERSIDE METAL CONNECTED TO V^-
(PCB CONNECTION OPTIONAL)

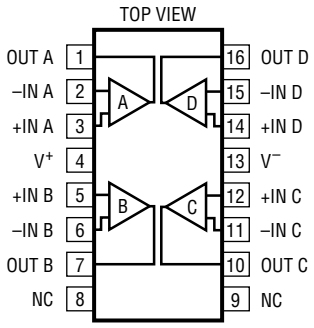

GN PACKAGE
16-LEAD PLASTIC SSOP
T_{JMAX} = 150°C, θ_{JA} = 135°C/W

ORDER PART NUMBER	DHC PART MARKING*
LTC6242CDHC	6242
LTC6242HVCDHC	6242HV
LTC6242IDHC	6242
LTC6242HVIDHC	6242HV
ORDER PART NUMBER	**GN PART MARKING**
LTC6242CGN	6242
LTC6242HVCGN	6242HV
LTC6242IGN	6242I
LTC6242HVIGN	242HVI
LTC6242HGN	6242H
LTC6242HVHGN	242HVH

Order Options Tape and Reel: Add #TR Lead Free: Add #PBF Lead Free Tape and Reel: Add #TRPBF
Lead Free Part Marking: http://www.linear.com/leadfree/

*The temperature grade is identified by a label on the shipping container. Consult LTC Marketing for parts specified with wider operating temperature ranges.

AVAILABLE OPTIONS

PART NUMBER	AMPS/PACKAGE	SPECIFIED TEMP RANGE	SPECIFIED SUPPLY VOLTAGE	PACKAGE	PART MARKING
LTC6240CS5	1	0°C to 70°C	3V, 5V	SOT-23	LTCRR
LTC6240CS8	1	0°C to 70°C	3V, 5V	SO-8	6240
LTC6240HVCS5	1	0°C to 70°C	3V, 5V, ±5V	SOT-23	LTCRS
LTC6240HVCS8	1	0°C to 70°C	3V, 5V, ±5V	SO-8	6240HV
LTC6240IS5	1	–40°C to 85°C	3V, 5V	SOT-23	LTCRR
LTC6240IS8	1	–40°C to 85°C	3V, 5V	SO-8	6240I
LTC6240HVIS5	1	–40°C to 85°C	3V, 5V, ±5V	SOT-23	LTCRS
LTC6240HVIS8	1	–40°C to 85°C	3V, 5V, ±5V	SO-8	240HVI
LTC6240HS5	1	–40°C to 125°C	3V, 5V	SOT-23	LTCRR
LTC6240HS8	1	–40°C to 125°C	3V, 5V	SO-8	6240H
LTC6240HVHS5	1	–40°C to 125°C	3V, 5V, ±5V	SOT-23	LTCRS
LTC6240HVHS8	1	–40°C to 125°C	3V, 5V, ±5V	SO-8	240HVH
LTC6241CS8	2	0°C to 70°C	3V, 5V	SO-8	6241
LTC6241CDD	2	0°C to 70°C	3V, 5V	DD	LBPD
LTC6241HVCS8	2	0°C to 70°C	3V, 5V, ±5V	SO-8	6241HV
LTC6241HVCDD	2	0°C to 70°C	3V, 5V, ±5V	DD	LBRR
LTC6241IS8	2	–40°C to 85°C	3V, 5V	SO-8	6241I
LTC6241IDD	2	–40°C to 85°C	3V, 5V	DD	LBPD
LTC6241HVIS8	2	–40°C to 85°C	3V, 5V, ±5V	SO-8	241HVI
LTC6241HVIDD	2	–40°C to 85°C	3V, 5V, ±5V	DD	LBRR
LTC6241HS8	2	–40°C to 125°C	3V, 5V	SO-8	6241H
LTC6241HVHS8	2	–40°C to 125°C	3V, 5V, ±5V	SO-8	241HVH

AVAILABLE OPTIONS

PART NUMBER	AMPS/PACKAGE	SPECIFIED TEMP RANGE	SPECIFIED SUPPLY VOLTAGE	PACKAGE	PART MARKING
LTC6242CGN	4	0°C to 70°C	3V, 5V	GN	6242
LTC6242CDHC	4	0°C to 70°C	3V, 5V	DHC	6242
LTC6242HVCGN	4	0°C to 70°C	3V, 5V, ±5V	GN	6242HV
LTC6242HVCDHC	4	0°C to 70°C	3V, 5V, ±5V	DHC	6242HV
LTC6242IGN	4	–40°C to 85°C	3V, 5V	GN	6242I
LTC6242IDHC	4	–40°C to 85°C	3V, 5V	DHC	6242
LTC6242HVIGN	4	–40°C to 85°C	3V, 5V, ±5V	GN	242HVI
LTC6242HVIDHC	4	–40°C to 85°C	3V, 5V, ±5V	DHC	6242HV
LTC6242HGN	4	–40°C to 125°C	3V, 5V	GN	6242H
LTC6242HVHGN	4	–40°C to 125°C	3V, 5V, ±5V	GN	242HVH

ELECTRICAL CHARACTERISTICS

(LTC6240C/I, LTC6240HVC/I, LTC6241C/I, LTC6241HVC/I, LTC6242C/I, LTC6242HVC/I) The ● denotes the specifications which apply over the specified temperature range, otherwise specifications are at T_A = 25°C. V_S = 5V, 0V, V_{CM} = 2.5V unless otherwise noted.

SYMBOL	PARAMETER	CONDITIONS		MIN	TYP	MAX	UNITS
V_{OS}	Input Offset Voltage (Note 4)	LTC6241 S8			40	125	µV
		0°C to 70°C	●			250	µV
		–40°C to 85°C	●			300	µV
		LTC6242 GN			50	150	µV
		0°C to 70°C	●			275	µV
		–40°C to 85°C	●			300	µV
		LTC6240			50	175	µV
		0°C to 70°C	●			300	µV
		–40°C to 85°C	●			350	µV
		LTC6241 DD, LTC6242 DHC			100	550	µV
		0°C to 70°C	●			650	µV
		–40°C to 85°C	●			725	µV
	V_{OS} Match Channel-to-Channel (Note 5)	LTC6241 S8			40	160	µV
		0°C to 70°C	●			300	µV
		–40°C to 85°C	●			375	µV
		LTC6242 GN			50	185	µV
		0°C to 70°C	●			325	µV
		–40°C to 85°C	●			400	µV
		LTC6241 DD, LTC6242 DHC			150	650	µV
		0°C to 70°C	●			700	µV
		–40°C to 85°C	●			750	µV
TC V_{OS}	Input Offset Voltage Drift (Note 6)		●		0.7	2.5	µV/°C
I_B	Input Bias Current (Notes 4, 7)	LTC6241, LTC6242			0.2		pA
			●			75	pA
		LTC6240			0.2	1	pA
			●			75	pA
I_{OS}	Input Offset Current (Notes 4, 7)	LTC6241, LTC6242			0.2		pA
			●			75	pA
		LTC6240			0.2	1	pA
			●			75	pA
	Input Noise Voltage	0.1Hz to 10Hz			550		nV_{P-P}

ELECTRICAL CHARACTERISTICS

(LTC6240C/I, LTC6240HVC/I, LTC6241C/I, LTC6241HVC/I, LTC6242C/I, LTC6242HVC/I) The ● denotes the specifications which apply over the specified temperature range, otherwise specifications are at T_A = 25°C. V_S = 5V, 0V, V_{CM} = 2.5V unless otherwise noted.

SYMBOL	PARAMETER	CONDITIONS		MIN	TYP	MAX	UNITS
e_n	Input Noise Voltage Density	f = 1kHz			7	10	nV/√Hz
i_n	Input Noise Current Density (Note 8)				0.56		fA/√Hz
R_{IN}	Input Resistance	Common Mode			10^{12}		Ω
C_{IN}	Input Capacitance Differential Mode Common Mode	f = 100kHz			 3.5 3		 pF pF
V_{CM}	Input Voltage Range	Guaranteed by CMRR	●	0		3.5	V
CMRR	Common Mode Rejection	0V ≤ V_{CM} ≤ 3.5V	●	80	105		dB
	CMRR Match Channel-to-Channel (Note 5)		●	76	95		dB
A_{VOL}	Large Signal Voltage Gain	V_O = 1V to 4V R_L = 10k to V_S/2 0°C to 70°C –40°C to 85°C	 ● ●	 425 300 200	 1600 	 	 V/mV V/mV V/mV
		V_O = 1.5V to 3.5V R_L = 1k to V_S/2 0°C to 70°C –40°C to 85°C	 ● ●	 90 60 50	 215 	 	 V/mV V/mV V/mV
V_{OL}	Output Voltage Swing Low (Note 9)	No Load I_{SINK} = 1mA I_{SINK} = 5mA	● ● ●		7 40 190	30 75 325	mV mV mV
V_{OH}	Output Voltage Swing High (Note 9)	No Load I_{SOURCE} = 1mA I_{SOURCE} = 5mA	● ● ●		11 45 190	30 75 325	mV mV mV
PSRR	Power Supply Rejection	V_S = 2.8V to 6V, V_{CM} = 0.2V	●	80	104		dB
	PSRR Match Channel-to-Channel (Note 5)		●	74	100		dB
	Minimum Supply Voltage (Note 10)		●	2.8			V
I_{SC}	Short-Circuit Current		●	15	30		mA
I_S	Supply Current per Amplifier	LTC6241, LTC6242 0°C to 70°C –40°C to 85°C	 ● ●		1.8	2.2 2.3 2.4	mA mA mA
		LTC6240 0°C to 70°C –40°C to 85°C	 ● ●		2	2.4 2.5 2.6	mA mA mA
GBW	Gain Bandwidth Product	Frequency = 20kHz, R_L = 1kΩ	●	13	18		MHz
SR	Slew Rate (Note 11)	A_V = –2, R_L = 1kΩ	●	5	10		V/µs
FPBW	Full Power Bandwidth (Note 12)	V_{OUT} = $3V_{P-P}$, R_L = 1kΩ	●	0.53	1.06		MHz
t_s	Settling Time	V_{STEP} = 2V, A_V = –1, R_L = 1kΩ, 0.1%			1100		ns

ELECTRICAL CHARACTERISTICS

(LTC6240C/I, LTC6240HVC/I, LTC6241C/I, LTC6241HVC/I, LTC6242C/I, LTC6242HVC/I) The ● denotes the specifications which apply over the specified temperature range, otherwise specifications are at T_A = 25°C. V_S = 3V, 0V, V_{CM} = 1.5V unless otherwise noted.

SYMBOL	PARAMETER	CONDITIONS		MIN	TYP	MAX	UNITS
V_{OS}	Input Offset Voltage (Note 4)	LTC6241 S8			40	175	µV
		0°C to 70°C	●			275	µV
		–40°C to 85°C	●			325	µV
		LTC6242 GN			60	200	µV
		0°C to 70°C	●			275	µV
		–40°C to 85°C	●			325	µV
		LTC6240			50	200	µV
		0°C to 70°C	●			325	µV
		–40°C to 85°C	●			375	µV
		LTC6241 DD, LTC6242 DHC			100	550	µV
		0°C to 70°C	●			650	µV
		–40°C to 85°C	●			725	µV
	V_{OS} Match Channel-to-Channel (Note 5)	LTC6241 S8			40	200	µV
		0°C to 70°C	●			325	µV
		–40°C to 85°C	●			400	µV
		LTC6242 GN			60	225	µV
		0°C to 70°C	●			325	µV
		–40°C to 85°C	●			400	µV
		LTC6241 DD, LTC6242 DHC			150	650	µV
		0°C to 70°C	●			700	µV
		–40°C to 85°C	●			750	µV
TC V_{OS}	Input Offset Voltage Drift (Note 6)		●		0.7	2.5	µV/°C
I_B	Input Bias Current (Notes 4, 7)	LTC6241, LTC6242			0.2		pA
			●			75	pA
		LTC6240			0.2	1	pA
			●			75	pA
I_{OS}	Input Offset Current (Notes 4, 7)	LTC6241, LTC6242			0.2		pA
			●			75	pA
		LTC6240			0.2	1	pA
			●			75	pA
V_{CM}	Input Voltage Range	Guaranteed by CMRR	●	0		1.5	V
CMRR	Common Mode Rejection	0V ≤ V_{CM} ≤ 1.5V	●	78	100		dB
	CMRR Match Channel-to-Channel (Note 5)		●	76	95		dB
A_{VOL}	Large Signal Voltage Gain	V_O = 1V to 2V					
		R_L = 10k to V_S/2		140	600		V/mV
		0°C to 70°C	●	100			V/mV
		–40°C to 85°C	●	75			V/mV
V_{OL}	Output Voltage Swing Low (Note 9)	No Load	●		3	30	mV
		I_{SINK} = 1mA	●		65	110	mV
V_{OH}	Output Voltage Swing High (Note 9)	No Load	●		4	30	mV
		I_{SOURCE} = 1mA	●		70	120	mV
PSRR	Power Supply Rejection	V_S = 2.8V to 6V, V_{CM} = 0.2V	●	80	104		dB
	PSRR Match Channel-to-Channel (Note 5)		●	74	100		dB
	Minimum Supply Voltage (Note 10)		●	2.8			V
I_{SC}	Short-Circuit Current		●	3	6		mA
I_S	Supply Current per Amplifier	LTC6241, LTC6242			1.4	1.7	mA
		0°C to 70°C	●			1.8	mA
		–40°C to 85°C	●			1.9	mA
		LTC6240			1.5	1.9	mA
		0°C to 70°C	●			2	mA
		–40°C to 85°C	●			2.1	mA
GBW	Gain Bandwidth Product	Frequency = 20kHz, R_L = 1kΩ	●	12	17		MHz

ELECTRICAL CHARACTERISTICS

(LTC6240HVC/I, LTC6241HVC/I, LTC6242HVC/I) The ● denotes the specifications which apply over the specified temperature range, otherwise specifications are at T_A = 25°C. V_S = ±5V, 0V, V_{CM} = 0V unless otherwise noted.

SYMBOL	PARAMETER	CONDITIONS		MIN	TYP	MAX	UNITS
V_{OS}	Input Offset Voltage (Note 4)	LTC6241 S8			50	175	µV
		0°C to 70°C	●			275	µV
		–40°C to 85°C	●			325	µV
		LTC6242 GN			60	200	µV
		0°C to 70°C	●			275	µV
		–40°C to 85°C	●			325	µV
		LTC6240			60	250	µV
		0°C to 70°C	●			350	µV
		–40°C to 85°C	●			400	µV
		LTC6241 DD, LTC6242 DHC			100	550	µV
		0°C to 70°C	●			650	µV
		–40°C to 85°C	●			725	µV
	V_{OS} Match Channel-to-Channel (Note 5)	LTC6241 S8			50	200	µV
		0°C to 70°C	●			325	µV
		–40°C to 85°C	●			400	µV
		LTC6242 GN			60	225	µV
		0°C to 70°C	●			325	µV
		–40°C to 85°C	●			400	µV
		LTC6241 DD, LTC6242 DHC			150	650	µV
		0°C to 70°C	●			700	µV
		–40°C to 85°C	●			750	µV
TC V_{OS}	Input Offset Voltage Drift (Note 6)		●		0.7	2.5	µV/°C
I_B	Input Bias Current (Notes 4, 7)	LTC6241, LTC6242			0.5		pA
			●			75	pA
		LTC6240			0.5	1	pA
			●			75	pA
I_{OS}	Input Offset Current (Notes 4, 7)	LTC6241, LTC6242			0.2		pA
			●			75	pA
		LTC6240			0.2	1	pA
			●			75	pA
	Input Noise Voltage	0.1Hz to 10Hz			550		nV_{P-P}
e_n	Input Noise Voltage Density	f = 1kHz			7	10	$nV/\sqrt{Hz}$
i_n	Input Noise Current Density (Note 8)				0.56		$fA/\sqrt{Hz}$
R_{IN}	Input Resistance	Common Mode			10^{12}		Ω
C_{IN}	Input Capacitance	f = 100kHz					
	Differential Mode				3.5		pF
	Common Mode				3		pF
V_{CM}	Input Voltage Range	Guaranteed by CMRR	●	–5		3.5	V
CMRR	Common Mode Rejection	–5V ≤ V_{CM} ≤ 3.5V	●	83	105		dB
	CMRR Match Channel-to-Channel (Note 5)		●	76	95		dB
A_{VOL}	Large Signal Voltage Gain	V_O = –3.5V to 3.5V					
		R_L = 10k		775	2700		V/mV
		0°C to 70°C	●	600			V/mV
		–40°C to 85°C	●	500			V/mV
		R_L = 1k		150	360		V/mV
		0°C to 70°C	●	90			V/mV
		–40°C to 85°C	●	75			V/mV
V_{OL}	Output Voltage Swing Low (Note 9)	No Load	●		15	30	mV
		I_{SINK} = 1mA	●		45	75	mV
		I_{SINK} = 10mA	●		360	550	mV

ELECTRICAL CHARACTERISTICS

(LTC6240HVC/I, LTC6241HVC/I, LTC6242HVC/I) The ● denotes the specifications which apply over the specified temperature range, otherwise specifications are at T_A = 25°C. V_S = ±5V, 0V, V_{CM} = 0V unless otherwise noted.

SYMBOL	PARAMETER	CONDITIONS		MIN	TYP	MAX	UNITS
V_{OH}	Output Voltage Swing High (Note 9)	No Load	●		15	30	mV
		I_{SOURCE} = 1mA	●		45	75	mV
		I_{SOURCE} = 10mA	●		360	550	mV
PSRR	Power Supply Rejection	V_S = 2.8V to 11V, V_{CM} = 0.2V	●	85	110		dB
	PSRR Match Channel-to-Channel (Note 5)		●	82	106		dB
	Minimum Supply Voltage (Note 10)		●	2.8			V
I_{SC}	Short-Circuit Current		●	15	35		mA
I_S	Supply Current per Amplifier	LTC6241, LTC6242			2.5	3.2	mA
		0°C to 70°C	●			3.3	mA
		–40°C to 85°C	●			3.7	mA
		LTC6240			2.7	3.3	mA
		0°C to 70°C	●			3.4	mA
		–40°C to 85°C	●			3.8	mA
GBW	Gain Bandwidth Product	Frequency = 20kHz, R_L = 1kΩ	●	13	18		MHz
SR	Slew Rate (Note 11)	A_V = –2, R_L = 1kΩ	●	5.5	10		V/µs
FPBW	Full Power Bandwidth (Note 12)	V_{OUT} = $3V_{P-P}$, R_L = 1kΩ	●	0.58	1.06		MHz
t_s	Settling Time	V_{STEP} = 2V, A_V = –1, R_L = 1kΩ, 0.1%			900		ns

(LTC6240H/LTC6240HVH, LTC6241H/LTC6241HVH, LTC6242H/LTC6242HVH) The ● denotes the specifications which apply from –40°C to 125°C, otherwise specifications are at T_A = 25°C. V_S = 5V, 0V, V_{CM} = 2.5V unless otherwise noted.

SYMBOL	PARAMETER	CONDITIONS		MIN	TYP	MAX	UNITS
V_{OS}	Input Offset Voltage (Note 4)	LTC6241 S8			40	125	µV
			●			400	µV
		LTC6242 GN			50	150	µV
			●			400	µV
		LTC6240			50	175	µV
			●			450	µV
	V_{OS} Match Channel-to-Channel (Note 5)	LTC6241 S8			40	160	µV
			●			400	µV
		LTC6242 GN			50	185	µV
			●			400	µV
TC V_{OS}	Input Offset Voltage Drift (Note 6)		●		0.7	2.5	µV/°C
I_B	Input Bias Current (Notes 4, 7)	LTC6241, LTC6242			0.2		pA
			●			1.5	nA
		LTC6240			0.2	1	pA
			●			2.5	nA
I_{OS}	Input Offset Current (Notes 4, 7)	LTC6241, LTC6242			0.2		pA
			●			150	pA
		LTC6240			0.2	1	pA
			●			750	pA
V_{CM}	Input Voltage Range	Guaranteed by CMRR	●	0		3.5	V
CMRR	Common Mode Rejection	0V ≤ V_{CM} ≤ 3.5V	●	78			dB
	CMRR Match Channel-to-Channel (Note 5)		●	74			dB
A_{VOL}	Large Signal Voltage Gain	V_O = 1V to 4V					
		R_L = 10k to V_S/2		425	1600		V/mV
			●	200			V/mV
		V_O = 1.5V to 3.5V					
		R_L = 1k to V_S/2		90	215		V/mV
			●	40			V/mV

ELECTRICAL CHARACTERISTICS

(LTC6240H/LTC6240HVH, LTC6241H/LTC6241HVH, LTC6242H/LTC6242HVH)

The ● denotes the specifications which apply from –40°C to 125°C, otherwise specifications are at T_A = 25°C. V_S = 5V, 0V, V_{CM} = 2.5V unless otherwise noted.

SYMBOL	PARAMETER	CONDITIONS		MIN	TYP	MAX	UNITS
V_{OL}	Output Voltage Swing Low (Note 9)	No Load I_{SINK} = 1mA I_{SINK} = 5mA	● ● ●			30 85 325	mV mV mV
V_{OH}	Output Voltage Swing High (Note 9)	No Load I_{SOURCE} = 1mA I_{SOURCE} = 5mA	● ● ●			30 85 325	mV mV mV
PSRR	Power Supply Rejection	V_S = 2.8V to 6V, V_{CM} = 0.2V	●	78			dB
	PSRR Match Channel-to-Channel (Note 5)		●	74			dB
	Minimum Supply Voltage (Note 10)		●	2.8			V
I_{SC}	Short-Circuit Current		●	15			mA
I_S	Supply Current per Amplifier	LTC6241, LTC6242	 ●		1.8	2.2 2.4	mA mA
		LTC6240	 ●		2	2.4 2.8	mA mA
GBW	Gain Bandwidth Product	Frequency = 20kHz, R_L = 1kΩ	●	12			MHz
SR	Slew Rate (Note 11)	A_V = –2, R_L = 1kΩ	●	4.5			V/µs
FPBW	Full Power Bandwidth (Note 12)	V_{OUT} = $3V_{P-P}$, R_L = 1kΩ	●	0.48			MHz

(LTC6240H/LTC6240HVH, LTC6241H/LTC6241HVH, LTC6242H/LTC6242HVH) The ● denotes the specifications which apply from –40°C to 125°C, otherwise specifications are at T_A = 25°C. V_S = 3V, 0V, V_{CM} = 1.5V unless otherwise noted.

SYMBOL	PARAMETER	CONDITIONS		MIN	TYP	MAX	UNITS
V_{OS}	Input Offset Voltage (Note 4)	LTC6241 S8	 ●		40	175 400	µV µV
		LTC6242 GN	 ●		60	200 400	µV µV
		LTC6240	 ●		50	200 450	µV µV
	V_{OS} Match Channel-to-Channel (Note 5)	LTC6241 S8	 ●		40	200 400	µV µV
		LTC6242 GN	 ●		60	225 400	µV µV
TC V_{OS}	Input Offset Voltage Drift (Note 6)		●		0.7	2.5	µV/°C
I_B	Input Bias Current (Notes 4, 7)	LTC6241, LTC6242	 ●		0.2	 1.5	pA nA
		LTC6240	 ●		0.2	1 2.5	pA nA
I_{OS}	Input Offset Current (Notes 4, 7)	LTC6241, LTC6242	 ●		0.2	 150	pA pA
		LTC6240	 ●		0.2	1 750	pA pA
V_{CM}	Input Voltage Range	Guaranteed by CMRR	●	0		1.5	V
CMRR	Common Mode Rejection	0V ≤ V_{CM} ≤ 1.5V	●	75			dB
	CMRR Match Channel-to-Channel (Note 5)		●	74			dB
A_{VOL}	Large Signal Voltage Gain	V_O = 1V to 2V R_L = 10k to V_S/2	 ●	140 65	600		V/mV V/mV

ELECTRICAL CHARACTERISTICS

(LTC6240H/LTC6240HVH, LTC6241H/LTC6241HVH, LTC6242H/LTC6242HVH)

The ● denotes the specifications which apply from –40°C to 125°C, otherwise specifications are at T_A = 25°C. V_S = 3V, 0V, V_{CM} = 1.5V unless otherwise noted.

SYMBOL	PARAMETER	CONDITIONS		MIN	TYP	MAX	UNITS
V_{OL}	Output Voltage Swing Low (Note 9)	No Load I_{SINK} = 1mA	● ●			30 130	mV mV
V_{OH}	Output Voltage Swing High (Note 9)	No Load I_{SOURCE} = 1mA	● ●			30 130	mV mV
PSRR	Power Supply Rejection	V_S = 2.8V to 6V, V_{CM} = 0.2V	●	78			dB
	PSRR Match Channel-to-Channel (Note 5)		●	74			dB
	Minimum Supply Voltage (Note 10)		●	2.8			V
I_{SC}	Short-Circuit Current		●	2.5			mA
I_S	Supply Current per Amplifier	LTC6241, LTC6242	 ●		1.4	1.7 1.9	mA mA
		LTC6240	 ●		1.5	1.9 2.1	mA mA
GBW	Gain Bandwidth Product	Frequency = 20kHz, R_L = 1kΩ	●	10			MHz

(LTC6240HVH/LTC6241HVH/LTC6242HVH) The ● denotes the specifications which apply from –40°C to 125°C, otherwise specifications are at T_A = 25°C. V_S = ±5V, V_{CM} = 0V unless otherwise noted.

SYMBOL	PARAMETER	CONDITIONS		MIN	TYP	MAX	UNITS
V_{OS}	Input Offset Voltage (Note 4)	LTC6241 S8	 ●		50	175 400	µV µV
		LTC6242 GN	 ●		60	200 400	µV µV
		LTC6240	 ●		60	250 450	µV µV
	V_{OS} Match Channel-to-Channel (Note 5)	LTC6241 S8	 ●		50	200 400	µV µV
		LTC6242 GN	 ●		60	225 400	µV µV
TC V_{OS}	Input Offset Voltage Drift (Note 6)		●		0.7	2.5	µV/°C
I_B	Input Bias Current (Notes 4, 7)	LTC6241, LTC6242	 ●		0.5	 1.5	pA nA
		LTC6240	 ●		0.5	1 2.5	pA nA
I_{OS}	Input Offset Current (Notes 4, 7)	LTC6241, LTC6242	 ●		0.2	 150	pA pA
		LTC6240	 ●		0.2	1 750	pA pA
V_{CM}	Input Voltage Range	Guaranteed by CMRR	●	–5		3.5	V
CMRR	Common Mode Rejection	–5V ≤ V_{CM} ≤ 3.5V	●	80			dB
	CMRR Match Channel-to-Channel (Note 5)		●	76			dB
A_{VOL}	Large Signal Voltage Gain	V_O = –3.5V to 3.5V R_L = 10k	 ●	775 350	2700		V/mV V/mV
		R_L = 1k	 ●	150 60	360		V/mV V/mV

ELECTRICAL CHARACTERISTICS

(LTC6240HVH/LTC6241HVH/LTC6242HVH) The ● denotes the specifications which apply from –40°C to 125°C, otherwise specifications are at T_A = 25°C. V_S = ±5V, V_{CM} = 0V unless otherwise noted.

SYMBOL	PARAMETER	CONDITIONS		MIN	TYP	MAX	UNITS
V_{OL}	Output Voltage Swing Low (Note 9)	No Load I_{SINK} = 1mA I_{SINK} = 10mA	● ● ●			30 85 600	mV mV mV
V_{OH}	Output Voltage Swing High (Note 9)	No Load I_{SOURCE} = 1mA I_{SOURCE} = 10mA	● ● ●			30 85 600	mV mV mV
PSRR	Power Supply Rejection	V_S = 2.8V to 11V, V_{CM} = 0.2V	●	83			dB
	PSRR Match Channel-to-Channel (Note 5)		●	82			dB
	Minimum Supply Voltage (Note 10)		●	2.8			V
I_{SC}	Short-Circuit Current		●	15			mA
I_S	Supply Current per Amplifier	LTC6241, LTC6242	 ●		2.5	3.2 3.7	mA mA
		LTC6240	 ●		2.7	3.3 3.8	mA mA
GBW	Gain Bandwidth Product	Frequency = 20kHz, R_L = 1kΩ	●	12			MHz
SR	Slew Rate (Note 11)	A_V = –2, R_L = 1kΩ	●	5			V/µs
FPBW	Full Power Bandwidth (Note 12)	V_{OUT} = $3V_{P-P}$, R_L = 1kΩ	●	0.53			MHz

Note 1: Stresses beyond those listed under Absolute Maximum Ratings may cause permanent damage to the device. Exposure to any Absolute Maximum Rating condition for extended periods may affect device reliability and lifetime.

Note 2: A heat sink may be required to keep the junction temperature below the absolute maximum rating when the output is shorted indefinitely.

Note 3: The LTC6240C/LTC6240HVC/LTC6241C/LTC6241HVC, LTC6242C/LTC6242HVC are guaranteed to meet specified performance from 0°C to 70°C. They are designed, characterized and expected to meet specified performance from –40°C to 85°C, but are not tested or QA sampled at these temperatures. The LTC6240I/LTC6240HVI, LTC6241I/LTC6241HVI, LTC6242I/LTC6242HVI are guaranteed to meet specified performance from –40°C to 85°C. All versions of the LTC6240H/LTC6241H/LTC6242H are guaranteed to meet specified performance from –40°C to 125°C.

Note 4: ESD (Electrostatic Discharge) sensitive device. ESD protection devices are used extensively internal to the LTC6240/LTC6241/LTC6242; however, high electrostatic discharge can damage or degrade the device. Use proper ESD handling precautions.

Note 5: Matching parameters are the difference between the two amplifiers A and D and between B and C of the LTC6242; between the two amplifiers of the LTC6241. CMRR and PSRR match are defined as follows: CMRR and PSRR are measured in µV/V on the matched amplifiers. The difference is calculated between the matching sides in µV/V. The result is converted to dB.

Note 6: This parameter is not 100% tested.

Note 7: Bias current at T_A = 25°C is 100% tested and guaranteed for the LTC6240 in the S8 package. The LTC6240S5, LTC6241 and LTC6242 are expected to achieve the same performance as the LTC6240S8. All parts are guaranteed to meet specifications over temperature.

Note 8: Current noise is calculated from the formula: $i_n = (2qI_B)^{1/2}$ where $q = 1.6 \times 10^{-19}$ coulomb. The noise of source resistors up to 50GΩ dominates the contribution of current noise. See also Typical Characteristics curve Noise Current vs Frequency.

Note 9: Output voltage swings are measured between the output and power supply rails.

Note 10: Minimum supply voltage is guaranteed by the power supply rejection ratio test.

Note 11: Slew rate is measured in a gain of –2 with R_F = 1k and R_G = 500Ω. On the LTC6240/LTC6241/LTC6242, V_S = ±2.5V, V_{IN} is ±1V and V_{OUT} slew rate is measured between –1V and +1V. On the LTC6240HV/LTC6241HV/LTC6242HV, V_{IN} is ±2V and V_{OUT} slew rate is measured between –2V and +2V.

Note 12: Full-power bandwidth is calculated from the slew rate: FPBW = $SR/\pi V_{P-P}$.

TYPICAL PERFORMANCE CHARACTERISTICS

V_{OS} Distribution LTC6241

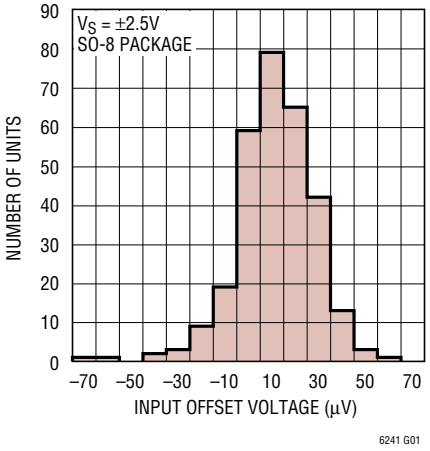

V_{OS} Distribution LTC6241

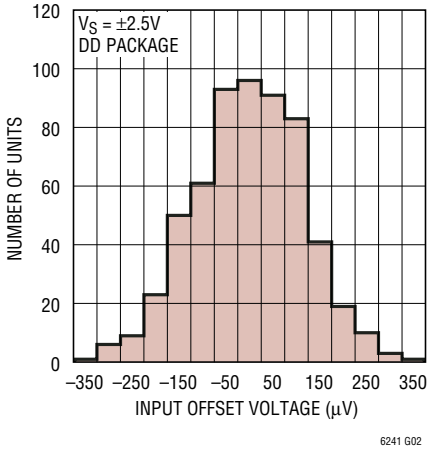

V_{OS} Temperature Coefficient Distribution LTC6241

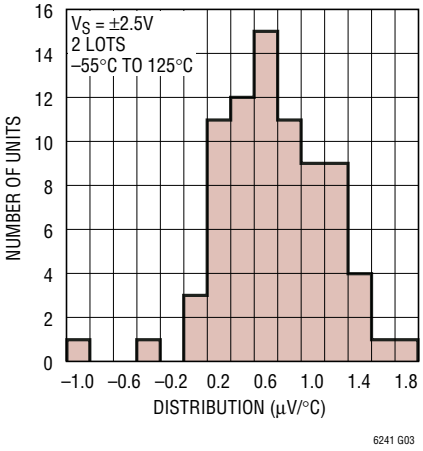

V_{OS} Distribution LTC6240

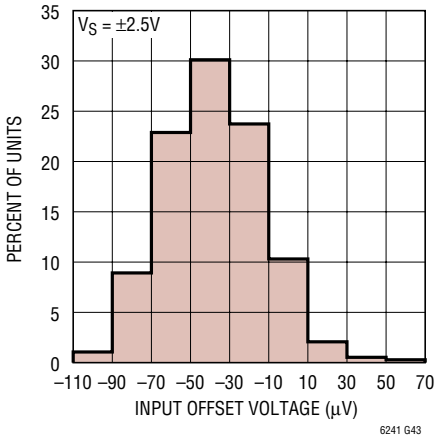

V_{OS} Temperature Coefficient Distribution LTC6240

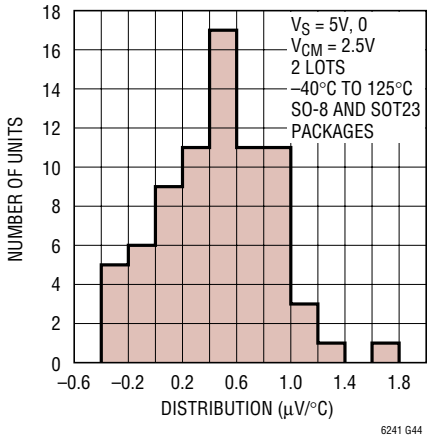

Supply Current vs Supply Voltage

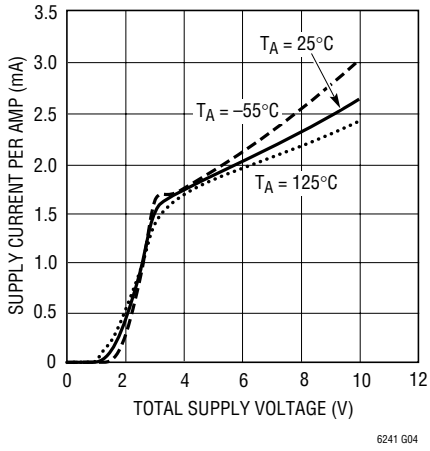

Offset Voltage vs Input Common Mode Voltage

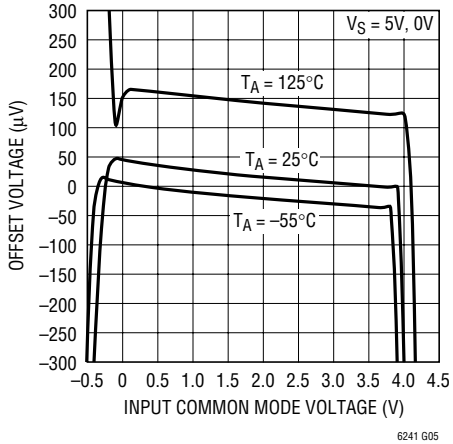

Input Bias Current vs Common Mode Voltage

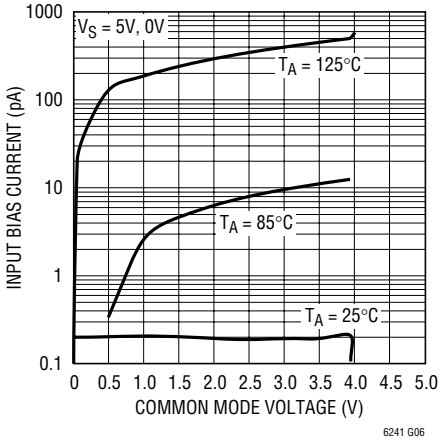

Input Bias Current vs Common Mode Voltage

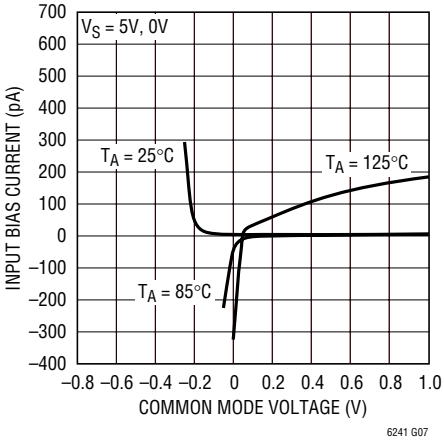

TYPICAL PERFORMANCE CHARACTERISTICS

Input Bias Current vs Temperature

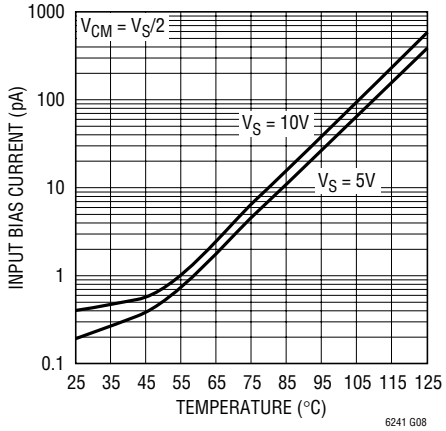

Output Saturation Voltage vs Load Current (Output Low)

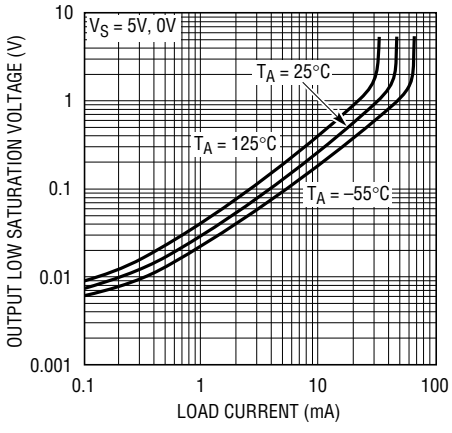

Output Saturation Voltage vs Load Current (Output High)

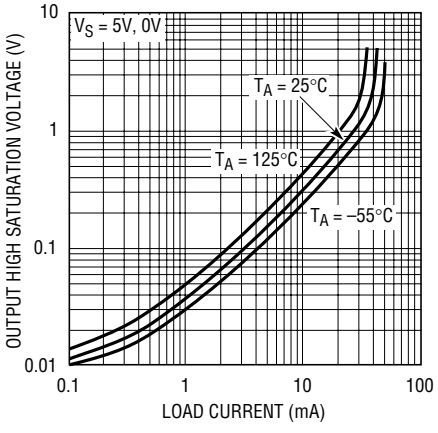

Gain Bandwidth and Phase Margin vs Temperature

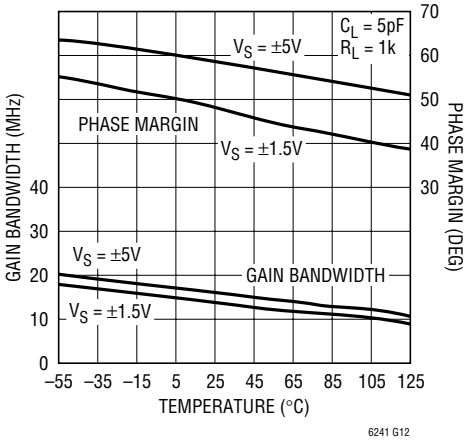

Open Loop Gain vs Frequency

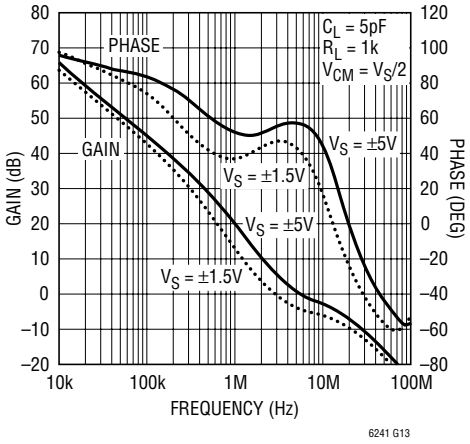

Gain Bandwidth and Phase Margin vs Supply Voltage

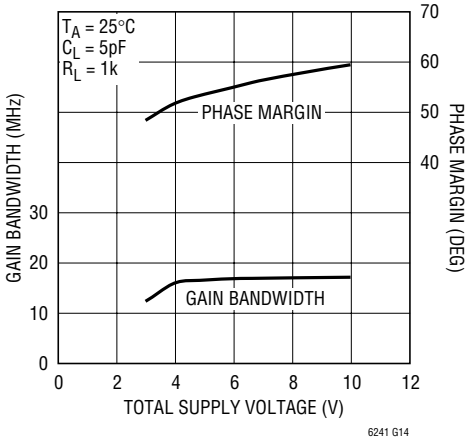

Slew Rate vs Temperature

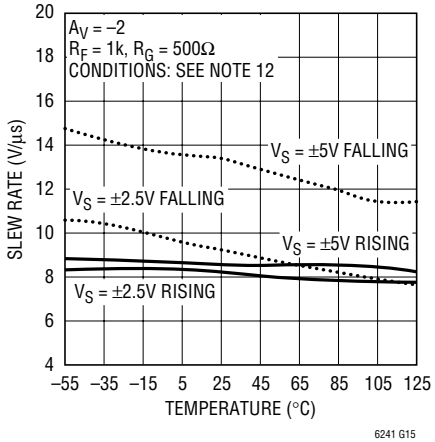

Output Impedance vs Frequency

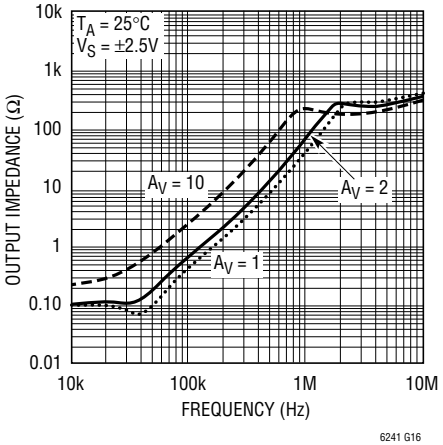

Common Mode Rejection Ratio vs Frequency

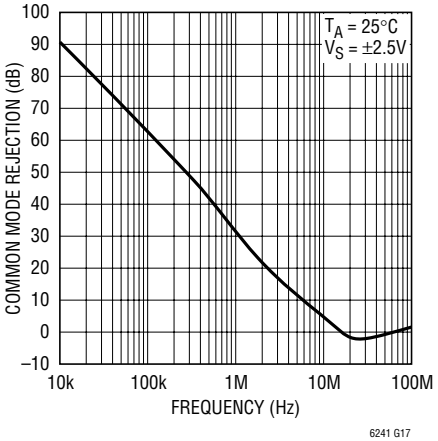

TYPICAL PERFORMANCE CHARACTERISTICS

Channel Separation vs Frequency

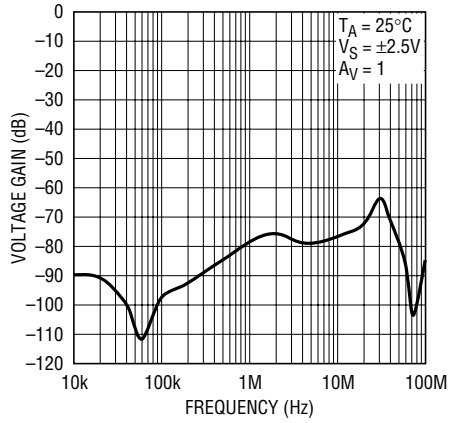

6241 G18

Power Supply Rejection Ratio vs Frequency

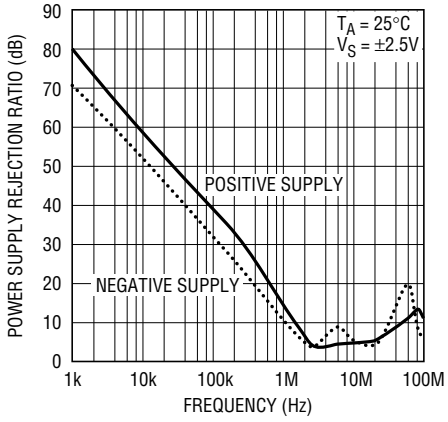

6241 G19

Input Capacitance vs Frequency

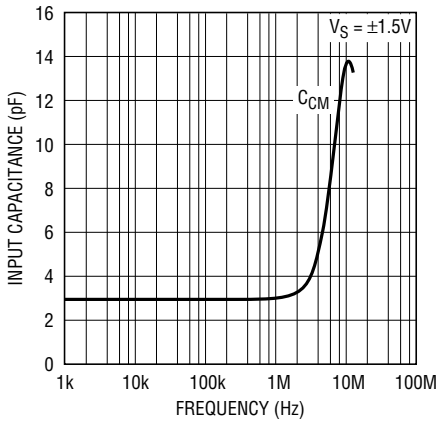

6241 G20

Minimum Supply Voltage

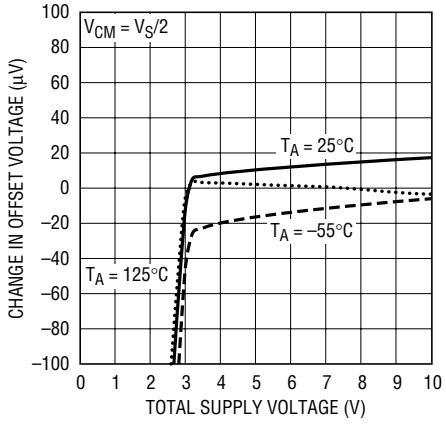

6241 G21

Output Short Circuit Current vs Power Supply Voltage

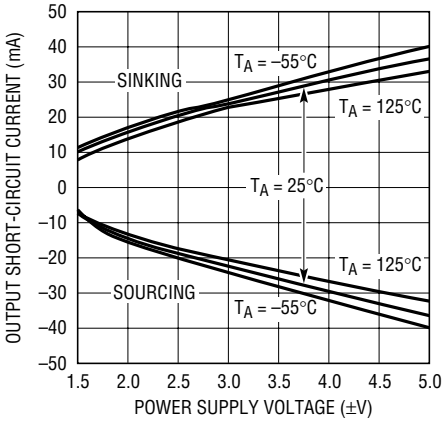

6241 G22

Open Loop Gain

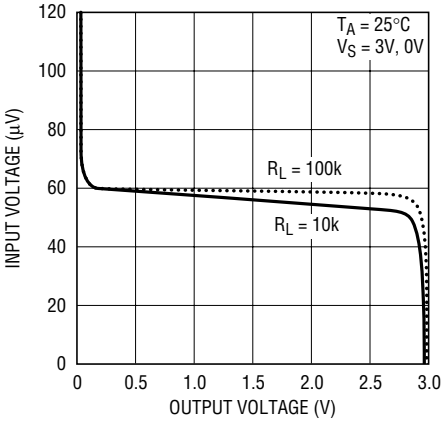

6241 G23

Open Loop Gain

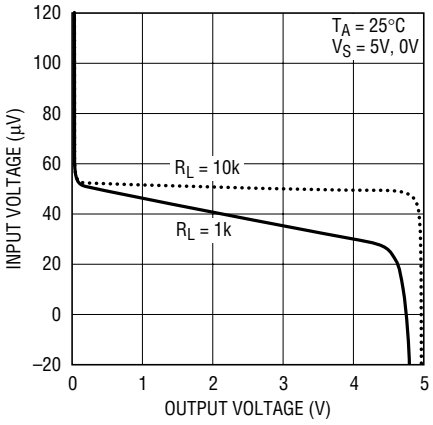

6241 G24

Open Loop Gain

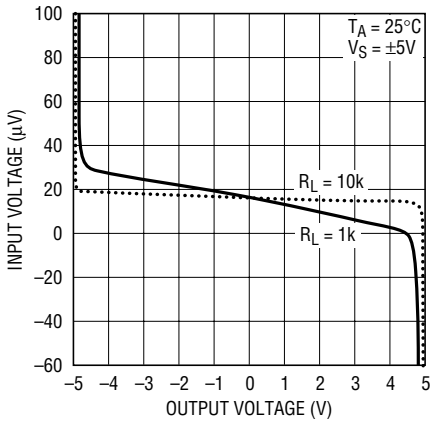

6241 G25

Offset Voltage vs Output Current

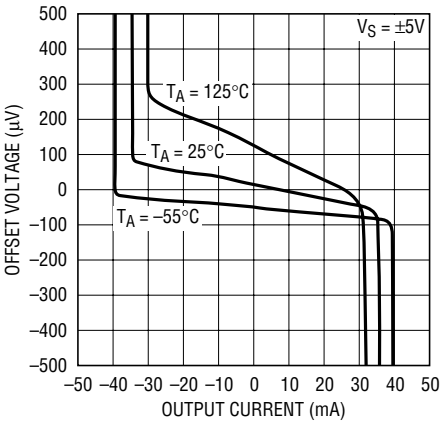

6241 G26

TYPICAL PERFORMANCE CHARACTERISTICS

Warm-Up Drift vs Time

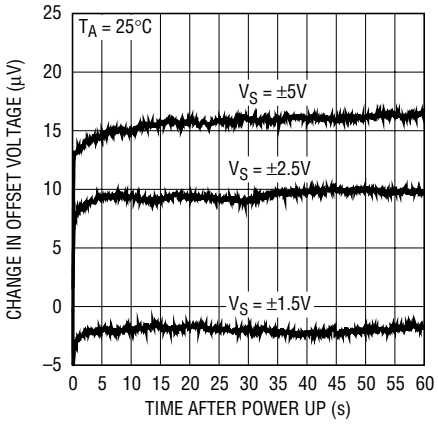

Noise Voltage vs Frequency

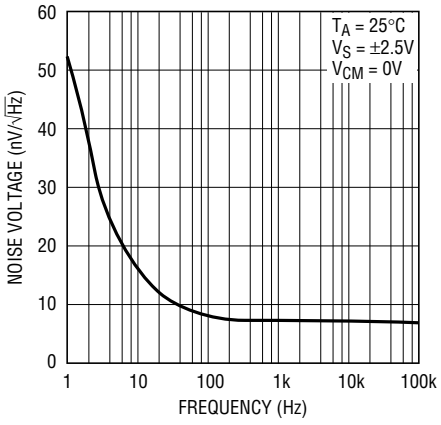

0.1Hz to 10Hz Voltage Noise

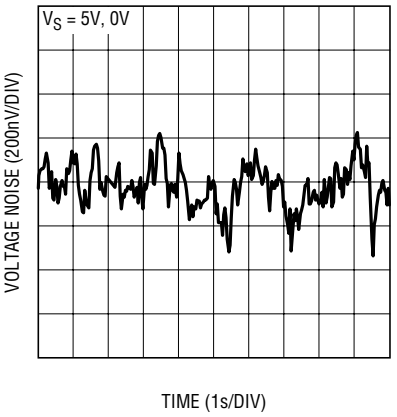

Noise Current vs Frequency

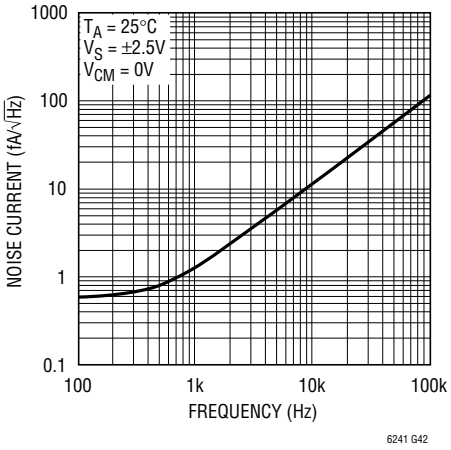

Series Output Resistance and Overshoot vs Capacitive Load

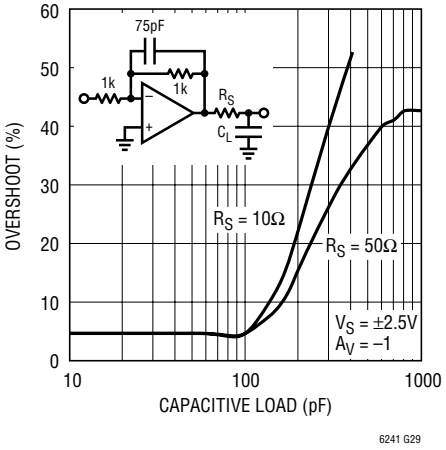

Minimum Output Series Resistance vs Capacitive Load

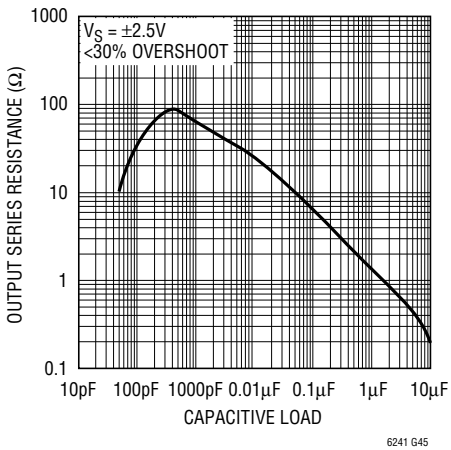

Series Output Resistance and Overshoot vs Capacitive Load

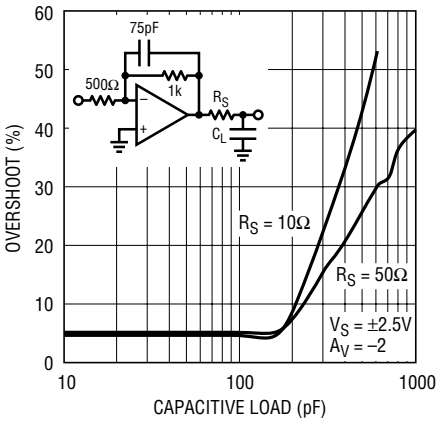

Settling Time vs Output Step (Non-Inverting)

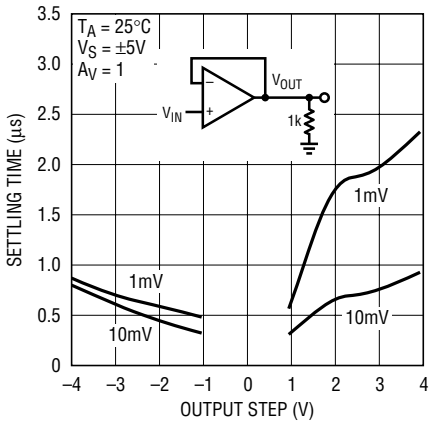

Settling Time vs Output Step (Inverting)

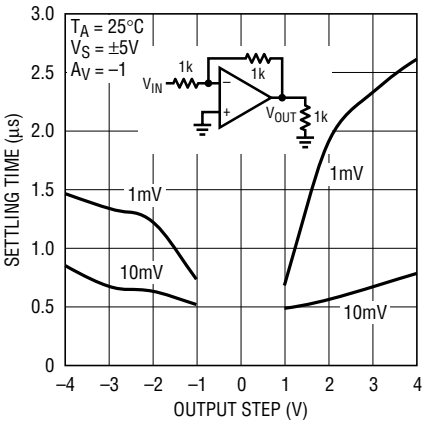

TYPICAL PERFORMANCE CHARACTERISTICS

Maximum Undistorted Output Signal vs Frequency

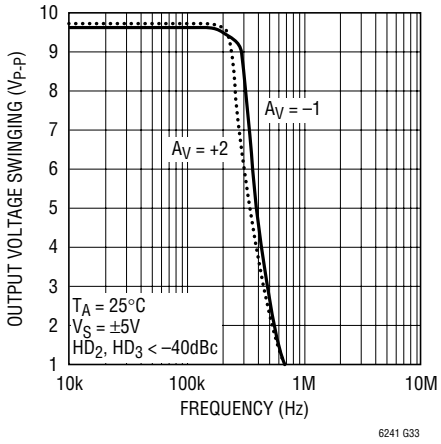

Distortion vs Frequency

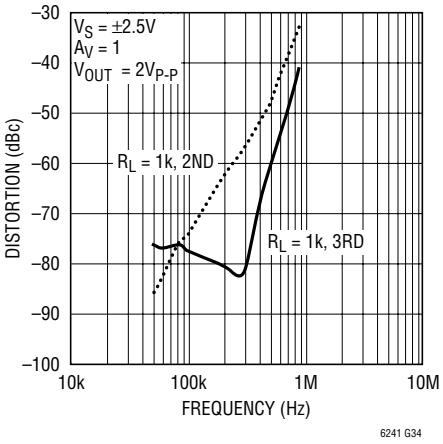

Distortion vs Frequency

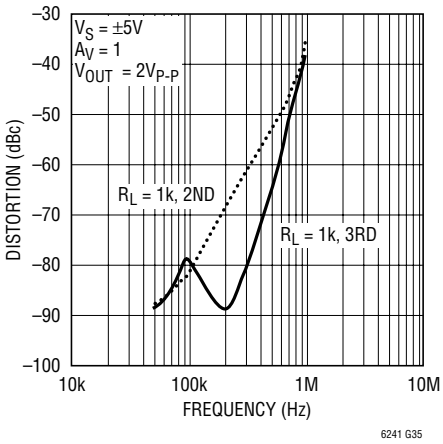

Distortion vs Frequency

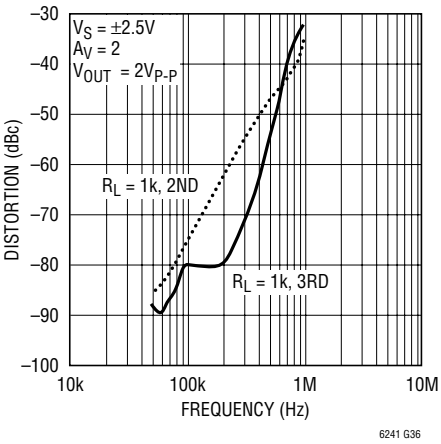

Distortion vs Frequency

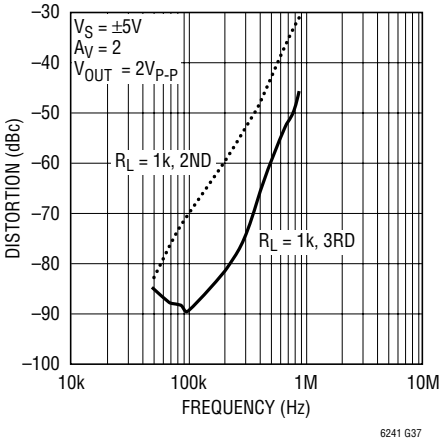

Small Signal Response

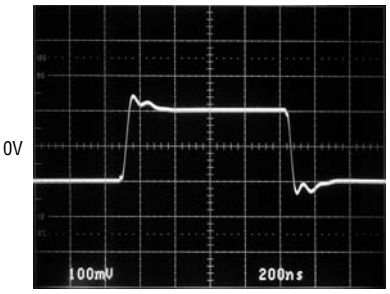

VS = ±2.5V
AV = 1
RL = ∞

Large Signal Response

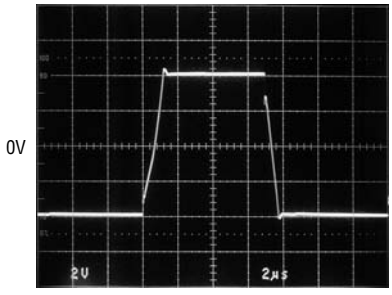

VS = ±5V
AV = 1
RL = ∞

Large Signal Response

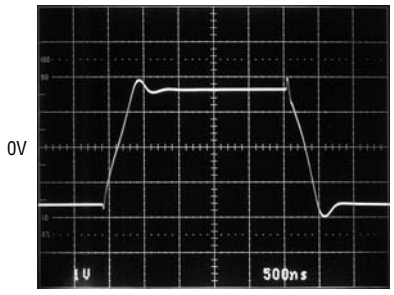

VS = ±2.5V
AV = –1
RL = 1k

Output Overdrive Recovery

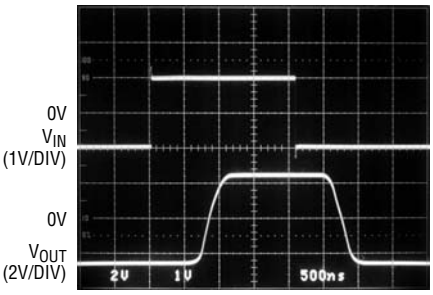

VS = ±2.5V
AV = 3
RL = ∞
500ns/DIV

APPLICATIONS INFORMATION

Amplifier Characteristics

Figure 1 is a simplified schematic of the amplifier, which has a pair of low noise input transistors M1 and M2. A simple folded cascode Q1, Q2 and R1, R2 allow the input stage to swing to the negative rail, while performing level shift to the Differential Drive Generator. Low offset voltage is accomplished by laser trimming the input stage.

Capacitor C1 reduces the unity cross frequency and improves the frequency stability without degrading the gain bandwidth of the amplifier. Capacitor Cm sets the overall amplifier gain bandwidth. The differential drive generator supplies signals to transistors M3 and M4 that swing the output from rail-to-rail.

The photo of Figure 2 shows the output response to an input overdrive with the amplifier connected as a voltage follower. If the negative going input signal is less than a diode drop below V^-, no phase inversion occurs. For input signals greater than a diode drop below V^-, limit the current to 3mA with a series resistor R_S to avoid phase inversion.

ESD

The LTC6240/LTC6241/LTC6242 have reverse-biased ESD protection diodes on all input and outputs as shown in Figure 1. If these pins are forced beyond either supply, unlimited current will flow through these diodes. If the current is transient and limited to one hundred milliamps or less, no damage to the device will occur.

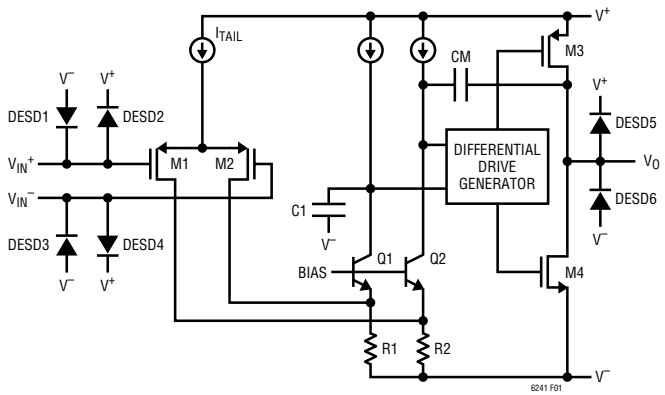

Figure 1. Simplified Schematic

The amplifier input bias current is the leakage current of these ESD diodes. This leakage is a function of the temperature and common mode voltage of the amplifier, as shown in the Typical Performance Curves.

Noise

The LTC6240/LTC6241/LTC6242 exhibit exceptionally low 1/f noise in the 0.1Hz to 10Hz region. This 550nV$_{P-P}$ noise allows these op amps to be used in a wide variety of high impedance low frequency applications, where Zero-Drift amplifiers might be inappropriate due to their charge injection.

In the frequency region above 1kHz the LTC6240/LTC6241/LTC6242 also show good noise voltage performance. In this frequency region, noise can easily be dominated by the total source resistance of the particular application. Specifically, these amplifiers exhibit the noise of a 3.1kΩ resistor, meaning it is desirable to keep the source and feedback resistance at or below this value, i.e. $R_S + R_G||R_{FB} \leq 3.1k\Omega$. Above this total source impedance, the noise voltage is not dominated by the amplifier.

Noise current can be estimated from the expression $i_n = \sqrt{2qI_B}$, where $q = 1.6 \bullet 10^{-19}$ coulombs. Equating $\sqrt{4kTR\Delta f}$ and $R\sqrt{2qI_B\Delta f}$ shows that for source resistors below 50GΩ the amplifier noise is dominated by the source resistance. See the Typical Characteristics curve Noise Current vs Frequency.

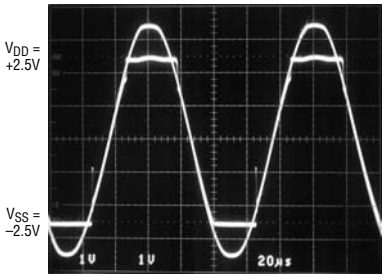

VOUT AND VIN OF FOLLOWER WITH LARGE INPUT OVERDRIVE

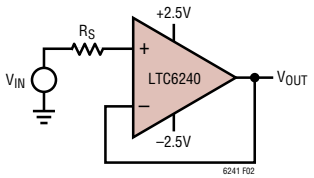

Figure 2. Unity Gain Follower Test Circuit

APPLICATIONS INFORMATION

Proprietary design techniques are used to obtain simultaneous low 1/f noise and low input capacitance. Low input capacitance is important when the amplifier is used with high value source and feedback resistors. High frequency noise from the amplifier tail current source, I_{TAIL} in Figure 1, couples through the input capacitance and appears across these large source and feedback resistors. As an example, the photodiode amplifier of Figure 15 on the last page of this data sheet shows the noise results from the LTC6241 and the results of a competitive CMOS amplifier. The LTC6241 output is the ideal noise of a 1MΩ resistor at room temperature, 130nV$\sqrt{Hz}$.

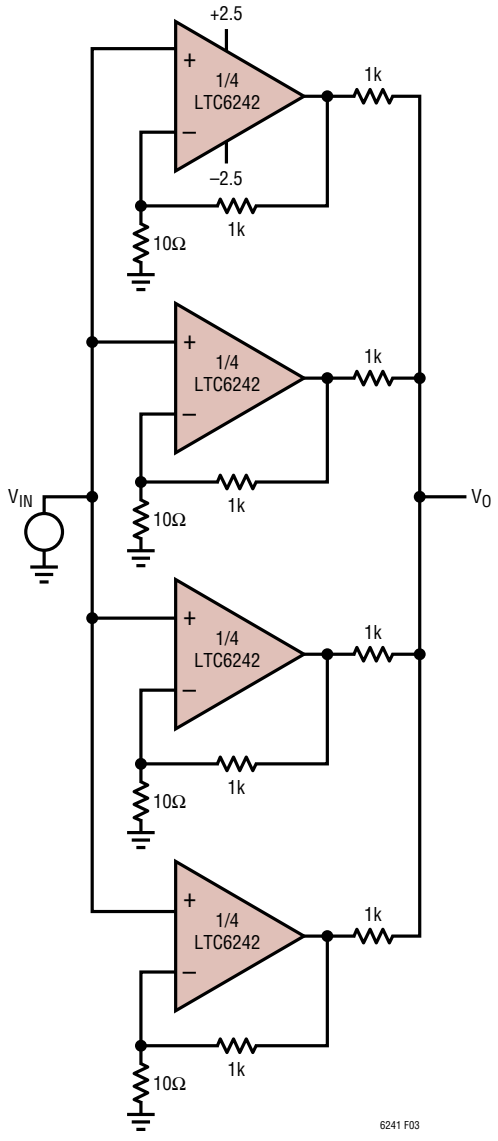

Figure 3. Parallel Amplifier Lowers Noise by 2x

Half the Noise

The circuit shown in Figure 3 can be used to achieve even lower noise voltage. By paralleling 4 amplifiers the noise voltage can be lowered by $\sqrt{4}$, or half as much noise. The $\sqrt{}$ comes about from an RMS summing of uncorrelated noise sources. This circuit maintains extremely high input resistance, and has a 250Ω output resistance. For lower output resistance, a buffer amplifier can be added without influencing the noise.

Stability

The good noise performance of these op amps can be attributed to large input devices in the differential pair. Above several hundred kilohertz, the input capacitance rises and can cause amplifier stability problems if left unchecked. When the feedback around the op amp is resistive (R_F), a pole will be created with R_F, the source resistance, source capacitance (R_S, C_S), and the amplifier input capacitance. In low gain configurations and with R_F and R_S in even the kilohm range (Figure 4), this pole can create excess phase shift and possibly oscillation. A small capacitor C_F in parallel with R_F eliminates this problem.

Low Noise Single-Ended Input to Differential Output Amplifier

The circuit on the first page of the data sheet is a low noise single-ended input to differential output amplifier, with a 200k input impedance. The very low input bias current of the LTC6241 allows for these large input and feedback resistors. The 200k resistors, R1 and R2, along with C1 and C2 set the –3dB bandwidth to 80kHz. Capacitor C3 is used to cancel effects of input capacitance, while C4 adds

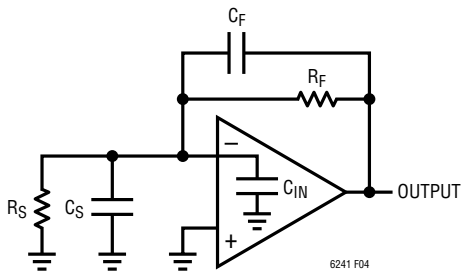

Figure 4. Compensating Input Capacitance

APPLICATIONS INFORMATION

phase lead to compensate the phase lag of the second amplifier. The op amp's good input offset voltage match and low input bias current means that the typical differential output offset voltage is less than 40µV. A noise spectrum plot of the differential output is shown in Figure 5.

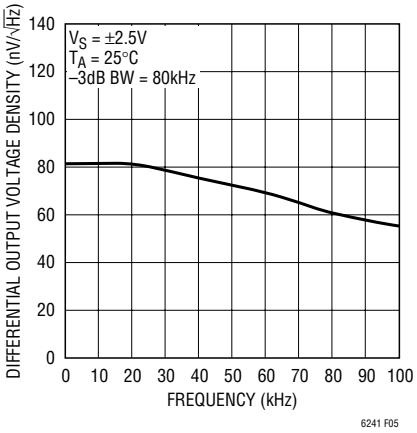

Figure 5. Differential Output Noise

Achieving Low Input Bias Current

The DD package is leadless and makes contact to the PCB beneath the package. Solder flux used during the attachment of the part to the PCB can create leakage current paths and can degrade the input bias current performance of the part. All inputs are susceptible because the backside paddle is connected to V^- internally. As the input voltage changes or if V^- changes, a leakage path can be formed and alter the observed input bias current. For lowest bias current, use the LTC6240/LTC6241 in the SO-8 and provide a guard ring around the inputs that are tied to a potential near the input voltage.

Layout Considerations and a PCB Guard Ring

In high source impedance applications such as pH probes, photodiodes, strain gauges, et cetera, the low input bias current of these parts requires a clean board layout to minimize additional leakage current into a high impedance signal node. A mere 100GΩ of PC board resistance between a 5V supply trace and an input trace adds 50pA of leakage current, far greater then the input bias current of the operational amplifier. A guard ring around the high-impedance input traces driven by a low-impedance source equal to the input voltage prevents such leakage problems. The guard ring should extend as far as necessary to shield the high impedance signal from any and all leakage paths. Figure 6 shows the use of a guard ring on the LTC6241 in a unity gain configuration. In this case the guard ring is connected to the output and is shielding the high impedance non-inverting input from V^-. Figure 7 shows the inverting gain configuration.

A Digitally Programmable AC Difference Amplifier

The LTC6241 configured as a difference amplifier, can be combined with a programmable gain amplifier (PGA) to obtain a low noise high speed programmable difference amplifier. Figure 8 shows the LTC6241 based as a single-supply AC amplifier. One LTC6241 op amp is used at the circuit's input as a standard four resistor difference

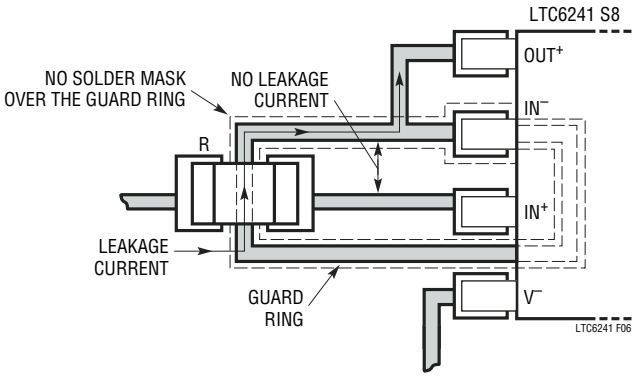

Figure 6. Sample Layout. Unity Gain Configuration, Using Guard Ring to Shield High Impedance Input from Board Leakage

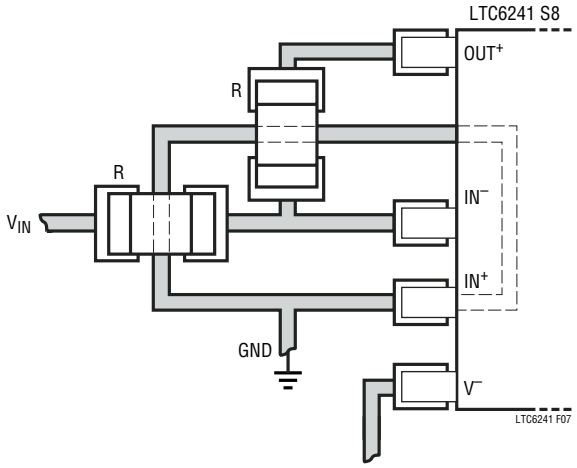

Figure 7. Sample Layout. Inverting Gain Configuration, Using Guard Ring to Shield High Impedance Input from Board Leakage

APPLICATIONS INFORMATION

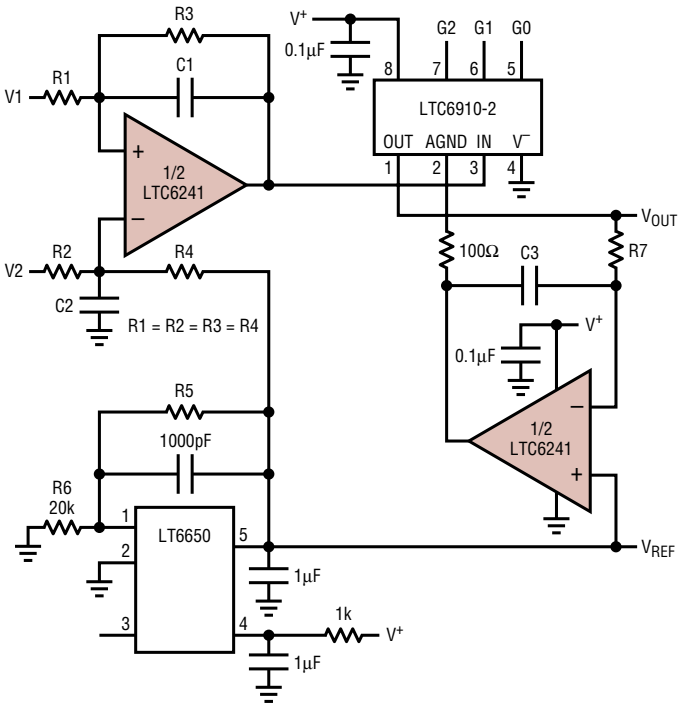

DIGITAL INPUTS G2	G1	G0	GAIN
0	0	0	0
0	0	1	–1
0	1	0	–2
0	1	1	–4
1	0	0	–8
1	0	1	–16
1	1	0	–32
1	1	1	–64

$V_{OUT} = (V1 - V2)\ GAIN + V_{REF}$

$V_{REF} = 0.4 \bullet \left(\frac{R5}{R6} + 1\right)$

$R5 = 10k \bullet (5 \bullet V_{REF} - 2)\quad R6 = 20k$

$-3d\ BANDWIDTH = (f_{HIGH} - f_{LOW})$

$f_{HIGH} = \frac{1}{2 \bullet \pi \bullet R3 \bullet C1}\quad f_{LOW} = \frac{GAIN}{2 \bullet \pi \bullet R7 \bullet C3}$

6241 F08

Figure 8. Wideband Difference Amplifier with High Input Impedance and Digitally Programmable Gain

amplifier. The low bias current and current noise of the LTC6241 allow the use of high valued input resistors, 100k or greater. Resistors R1, R2, R3 and R4 are equal and the gain of the difference amplifier is one. An LTC6910-2 PGA amplifies the difference amplifier output with inverting gains of –1, –2, –4, –8, –16, –32 and –64. The second LTC6241 op amp is used as an integrator to set the DC output voltage equal to the LT6650 reference voltage V_{REF}. The integrator drives the PGA analog ground to provide a feedback loop, in addition to blocking any DC voltage through the PGA. The reference voltage of the LT6650 can be set to a voltage from 400mV to V^+ – 350mV with resistors R5 and R6. If R6 is 20k or less, the error due to the LT6650 op amp bias current is negligible. The low voltage offset and drift of the LTC6241 integrator will not contribute any significant error to the LT6650 reference voltage. The LT6650 V_{REF} voltage has a maximum error of ±2% with 1% resistors. The upper –3dB frequency of the amplifier is set by resistor R3 and capacitor C1 and is limited by the bandwidth of the PGA when operated at a gain of 64. Capacitor C2 is equal to C1 and is added to maintain good common mode rejection at high frequency. The lower –3dB frequency is set by the integrator resistor R7, capacitor C3, and the gain setting of the LTC6910-2 PGA. This lower –3dB zero frequency is multiplied by the PGA gain. The rail-to-rail output of the LTC6910-2 PGA allows for a maximum output peak-to-peak voltage equal to twice the V_{REF} voltage. At the maximum gain setting of 64, the maximum peak-to-peak difference between inputs V1 and V2 is equal to twice V_{REF} divided by 64.

Example Design: Design a programmable gain AC difference amplifier, with a bandwidth of at least 10Hz to 100kHz, an input impedance equal to or greater than 100kΩ, and an output DC reference equal to 1V.

a. Select input resistors R1, R2, R3 and R4 equal to 100k.

b. If the upper –3dB frequency is 100kHz then C1 = 1/(2π • R2 • f3dB) = 1/(6.28 • 100kΩ • 100kHz) = 15pF (to the nearest 5% value) and C2 = C1 = 15pF.

c. Select R7 equal to one 1M and set the lower –3dB frequency to 10Hz at the highest PGA gain of 64, then C3 = Gain/(2π • R7 • f3dB) = 64/(6.28 • 100kΩ • 10Hz) = 1uF. Lower gains settings will give a lower f3dB.

d. Calculate the value of R5 to set the LT6650 reference equal to 1V;

V_{REF} = 0.4(R5/R6 + 1), so R5 = R6(2.5V_{REF} – 1). For R6 = 20kΩ, R5 = 30kΩ

With V_{REF} = 1V the maximum input difference voltage is equal to 2V/64 = 31.2mV.

40nVpp Noise, 0.05µV/°C Drift, Chopped FET Amplifier

Figure 9's circuit combines the ±5V rail-to-rail performance of the LTC6241HV with a pair of extremely low noise JFETs configured in a chopper based carrier modulation scheme

APPLICATIONS INFORMATION

to achieve an extraordinarily low noise and low DC drift. The performance of this circuit is suited for the demanding transducer signal conditioning situations such as high resolution scales and magnetic search coils.

The LTC1799's output is divided down to form a 2-phase 925Hz square wave clock. This frequency, harmonically unrelated to 60Hz, provides excellent immunity to harmonic beating or mixing effects which could cause instabilities. S1 and S2 receive complementary drive, causing A1 to see a chopped version of the input voltage. A1's square wave output is synchronously demodulated by S3 and S4. Because these switches are synchronously driven with the input chopper, proper amplitude and polarity information is presented to A2, the DC output amplifier. This stage integrates the square wave into a DC voltage, providing the output. The output is divided down (R2 and R1) and fed back to the input chopper where it serves as a zero signal reference. Gain, in this case 1000, is set by the R1-R2 ratio. Because A1 is AC coupled, its DC offset and drift do not affect the overall circuit offset, resulting in the extremely low offset and drift noted. The JFETs have an input RC damper that minimizes offset voltage contribution due to parasitic switch behavior, resulting in the 1µV offset specification.

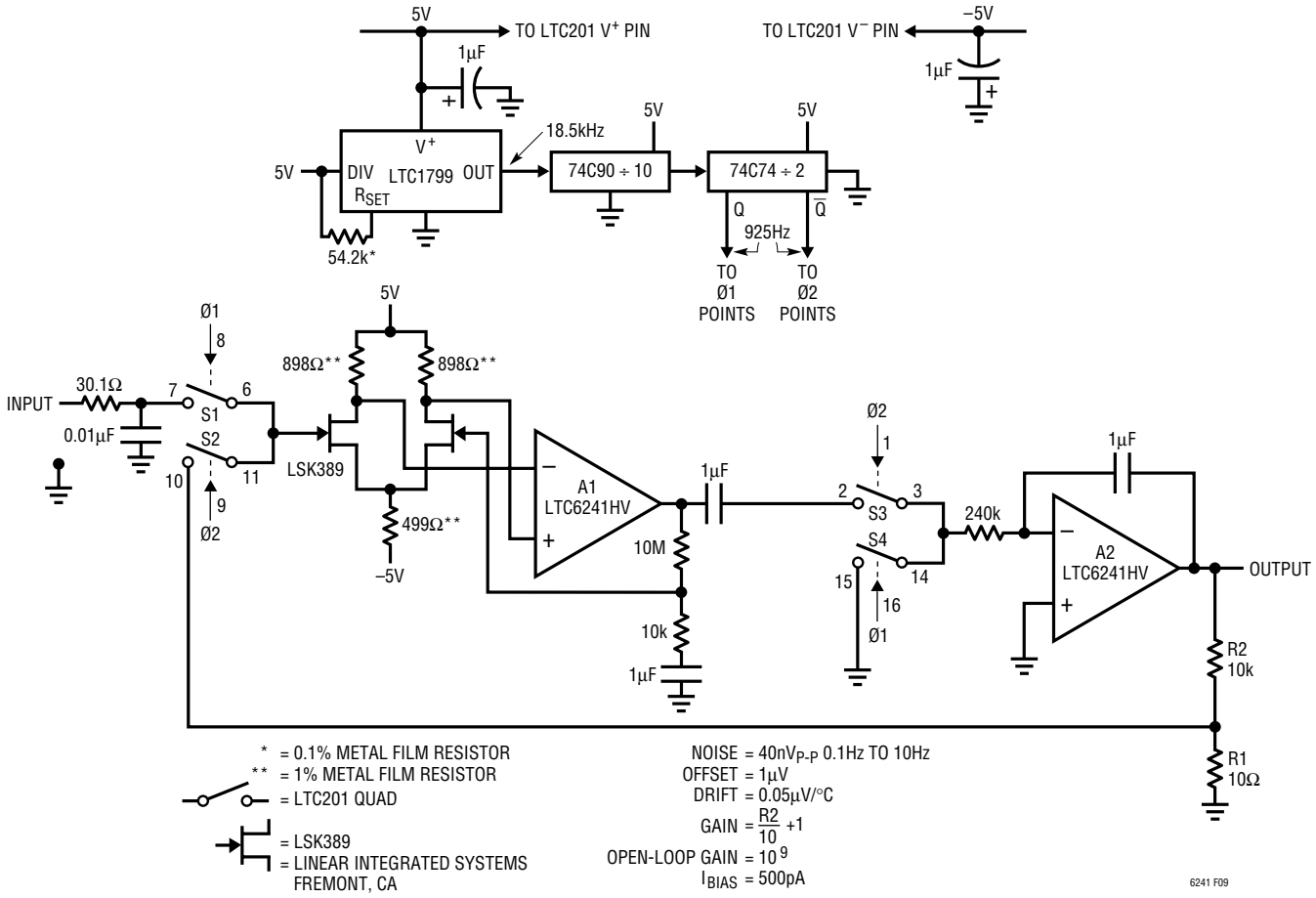

Figure 9. Ultra Low Noise Chopper Amplifier

APPLICATIONS INFORMATION

The noise measured over a 50 second interval, in Figure 10, is 40nV in a 0.1Hz to 10Hz bandwidth. This low noise is attributed to the input JFET's die size and current density.

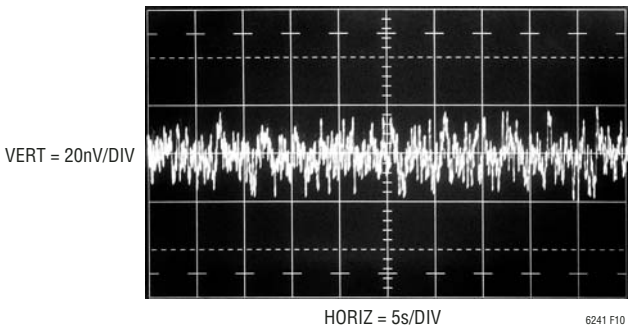

Figure 10. Noise in a 0.1Hz to 10Hz Bandwidth

Low Noise Shock Sensor Amplifiers

Figures 11 and 12 show the amplifiers realizing two different approaches to amplifying signals from a capacitive sensor. The sensor in both cases is a 770pF piezoelectric shock sensor accelerometer, which generates charge under physical acceleration.

Figure 11 shows the classical "charge amplifier" approach. The LTC6240 is in the inverting configuration so the sensor looks into a virtual ground. All of the charge generated by the sensor is forced across the feedback capacitor by the op amp action. Because the feedback capacitor is 100 times smaller than the sensor, it will be forced to 100 times what would have been the sensor's open circuit voltage. So the circuit gain is 100. The benefit of this approach is that the signal gain of the circuit is independent of any cable capacitance introduced between the sensor and the amplifier. Hence this circuit is favored for remote accelerometers where the cable length may vary. Difficulties with the circuit are inaccuracy of the gain setting with the small capacitor, and low frequency cutoff due to the bias resistor working into the small feedback capacitor.

Figure 12 shows a non-inverting amplifier approach. This approach has many advantages. First of all, the gain is set accurately with resistors rather than with a small capacitor. Second, the low frequency cutoff is dictated by the bias resistor working into the large 770pF sensor, rather than into a small feedback capacitor, for lower frequency response. Third, the non-inverting topology can be paralleled and summed (as shown) for scalable reductions in voltage noise. The only drawback to this circuit is that the parasitic capacitance at the input reduces the gain slightly. This circuit is favored in cases where parasitic input capacitances such as traces and cables will be relatively small and invariant.

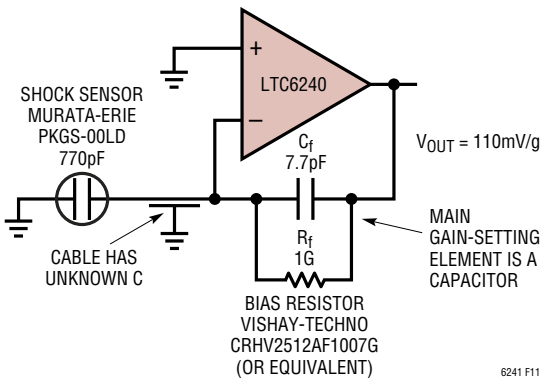

Figure 11. Classical Inverting Charge Amplifier

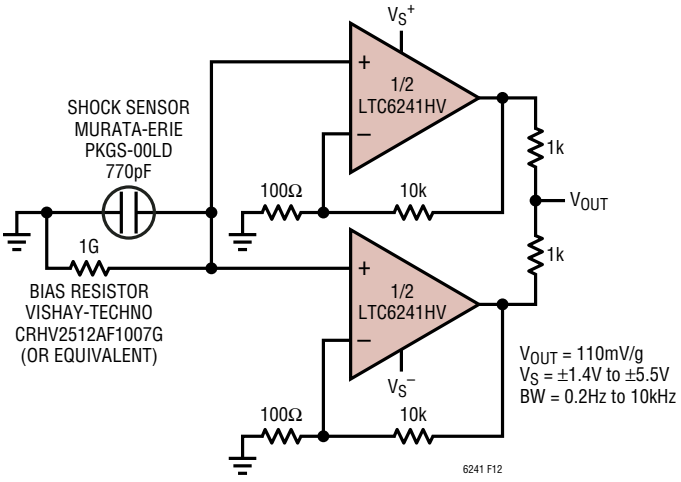

Figure 12. Low Noise Non-Inverting Shock Sensor Amplifier

APPLICATIONS INFORMATION

1M Transimpedance Amplifier with 43nV/√Hz Output Noise

In a normal 1M transimpedance amplifier, like that shown on the back page of this data sheet, the output noise density must be at least 130nV/√Hz at room temperature. This is true even should the op amp be perfectly noiseless, because the 1M resistor provides 130nV/√Hz of voltage noise at room temperature independently of the op amp.

The circuit of Figure 13 provides an overall transimpedance gain of 1MΩ, but it has an output noise density of only 43nV/√Hz, about 1/3 of the normal transimpedance amplifier. It does this by taking a higher initial transimpedance gain of 10M and then attenuating by a factor of 10. The transistor section provides voltage gain and works on a 54V supply voltage to guarantee adequate output swing. By achieving an output swing of 50V before attenuation, the circuit provides an output swing to 5V after attenuation. The 10M resistor sets the gain of the TIA stage and has a noise density of 400nV/√Hz. After attenuation, the effective TIA gain drops to 1M while the noise floor drops to 40nV/√Hz, which clearly dominates the observed 43nV/√Hz. Note the additional benefit that the offset voltage of the op amp is divided by 10. Worst case output offset for this circuit is 150µV over temperature.

Reference Buffer

Figure 14 shows the LTC6240 being utilized as a buffer in conjunction with the LT1019 reference. The passive R-C filter attenuates the reference noise and the LTC6240 provides a low noise buffer, resulting in an output noise of 8nV/√Hz.

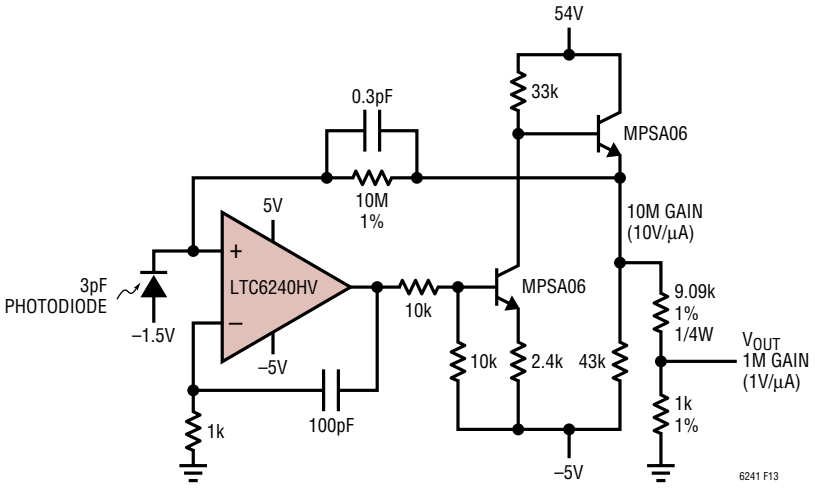

Figure 13. 1M Transimpedance Amplifier with 43nV/√Hz Output Noise

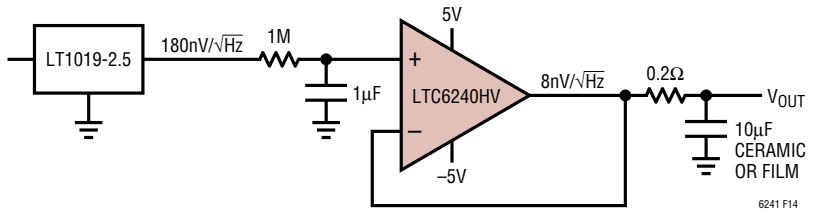

Figure 14. Low Noise Reference Buffer

PACKAGE DESCRIPTION

DHC Package
16-Lead Plastic DFN (5mm × 3mm)
(Reference LTC DWG # 05-08-1706)

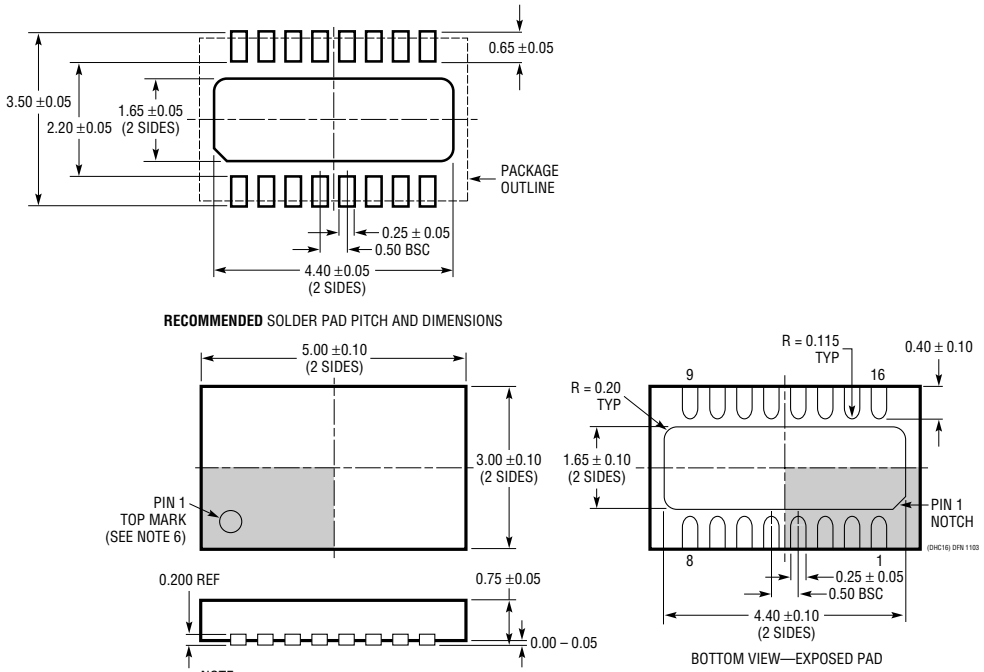

NOTE:
1. DRAWING PROPOSED TO BE MADE VARIATION OF VERSION (WJED-1) IN JEDEC PACKAGE OUTLINE MO-229
2. DRAWING NOT TO SCALE
3. ALL DIMENSIONS ARE IN MILLIMETERS
4. DIMENSIONS OF EXPOSED PAD ON BOTTOM OF PACKAGE DO NOT INCLUDE MOLD FLASH. MOLD FLASH, IF PRESENT, SHALL NOT EXCEED 0.15mm ON ANY SIDE
5. EXPOSED PAD SHALL BE SOLDER PLATED
6. SHADED AREA IS ONLY A REFERENCE FOR PIN 1 LOCATION ON THE TOP AND BOTTOM OF PACKAGE

GN Package
16-Lead Plastic SSOP (Narrow .150 Inch)
(Reference LTC DWG # 05-08-1641)

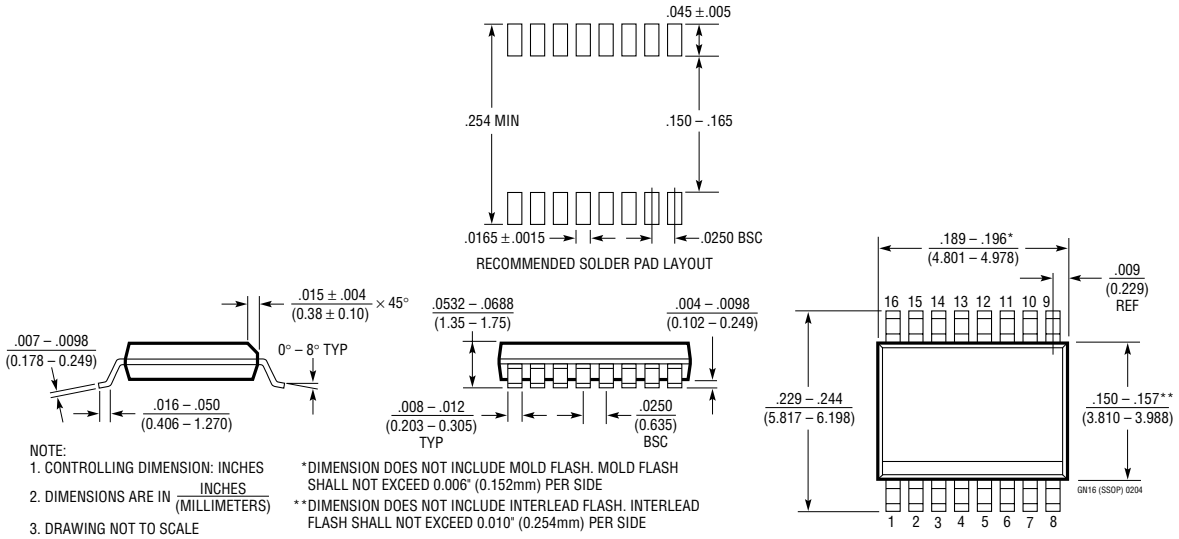

NOTE:
1. CONTROLLING DIMENSION: INCHES
2. DIMENSIONS ARE IN INCHES (MILLIMETERS)
3. DRAWING NOT TO SCALE

*DIMENSION DOES NOT INCLUDE MOLD FLASH. MOLD FLASH SHALL NOT EXCEED 0.006" (0.152mm) PER SIDE
**DIMENSION DOES NOT INCLUDE INTERLEAD FLASH. INTERLEAD FLASH SHALL NOT EXCEED 0.010" (0.254mm) PER SIDE

PACKAGE DESCRIPTION

DD Package
8-Lead Plastic DFN (3mm × 3mm)
(Reference LTC DWG # 05-08-1698)

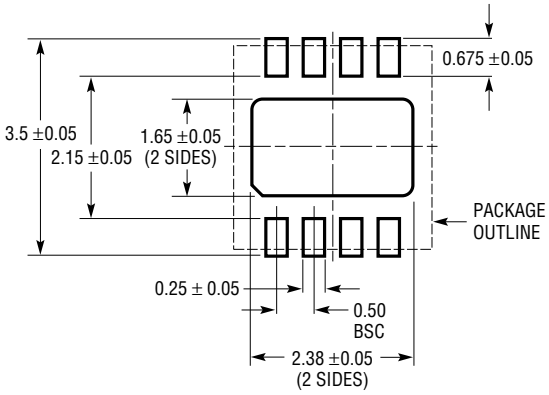

RECOMMENDED SOLDER PAD PITCH AND DIMENSIONS

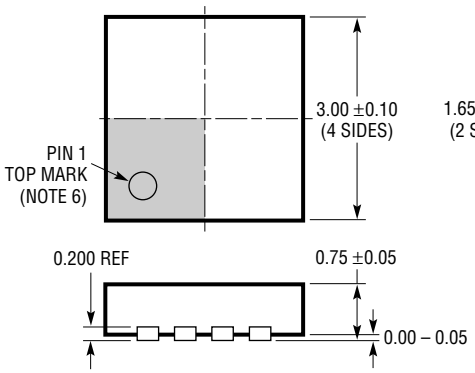

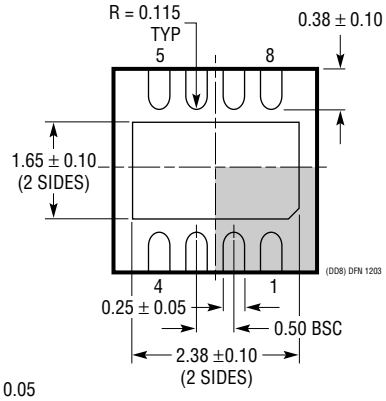

BOTTOM VIEW—EXPOSED PAD

NOTE:
1. DRAWING TO BE MADE A JEDEC PACKAGE OUTLINE M0-229 VARIATION OF (WEED-1)
2. DRAWING NOT TO SCALE
3. ALL DIMENSIONS ARE IN MILLIMETERS
4. DIMENSIONS OF EXPOSED PAD ON BOTTOM OF PACKAGE DO NOT INCLUDE MOLD FLASH. MOLD FLASH, IF PRESENT, SHALL NOT EXCEED 0.15mm ON ANY SIDE
5. EXPOSED PAD SHALL BE SOLDER PLATED
6. SHADED AREA IS ONLY A REFERENCE FOR PIN 1 LOCATION ON TOP AND BOTTOM OF PACKAGE

PACKAGE DESCRIPTION

S5 Package
5-Lead Plastic TSOT-23
(Reference LTC DWG # 05-08-1635)

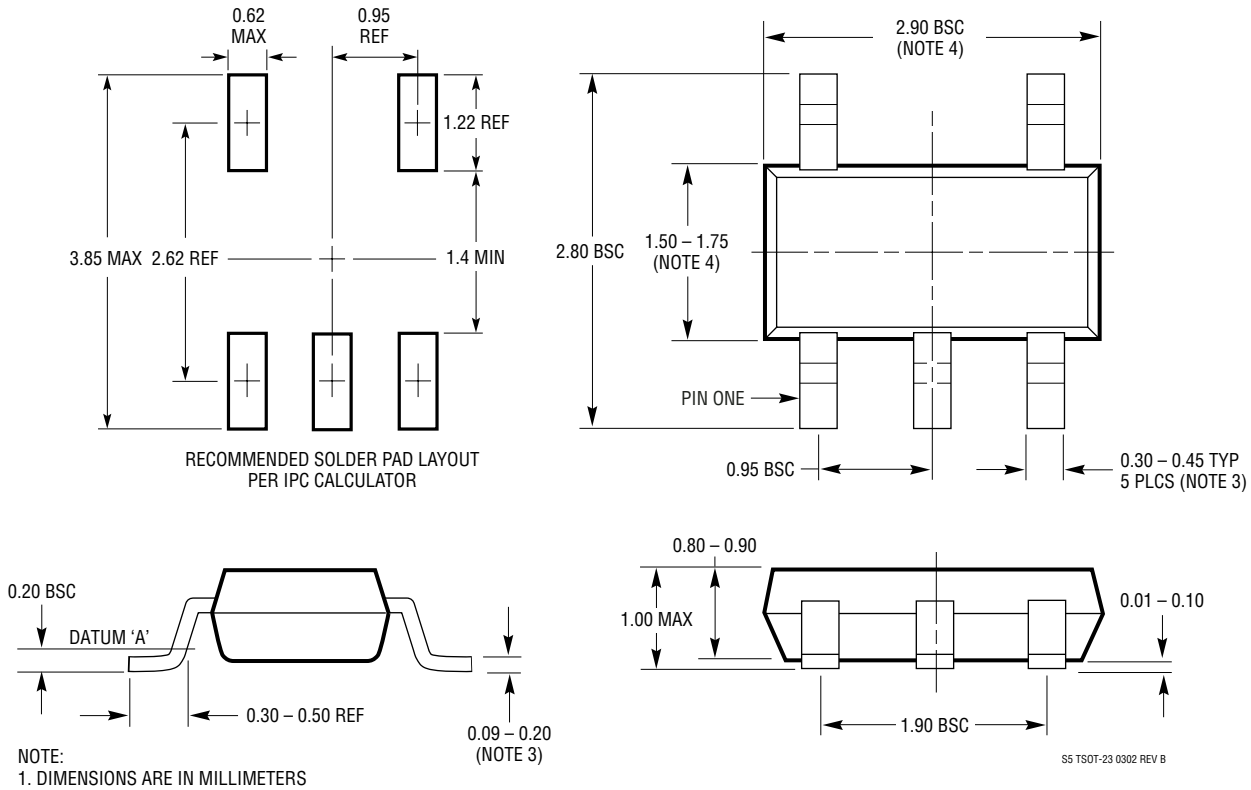

NOTE:
1. DIMENSIONS ARE IN MILLIMETERS
2. DRAWING NOT TO SCALE
3. DIMENSIONS ARE INCLUSIVE OF PLATING
4. DIMENSIONS ARE EXCLUSIVE OF MOLD FLASH AND METAL BURR
5. MOLD FLASH SHALL NOT EXCEED 0.254mm
6. JEDEC PACKAGE REFERENCE IS MO-193

PACKAGE DESCRIPTION

S8 Package
8-Lead Plastic Small Outline (Narrow .150 Inch)
(Reference LTC DWG # 05-08-1610)

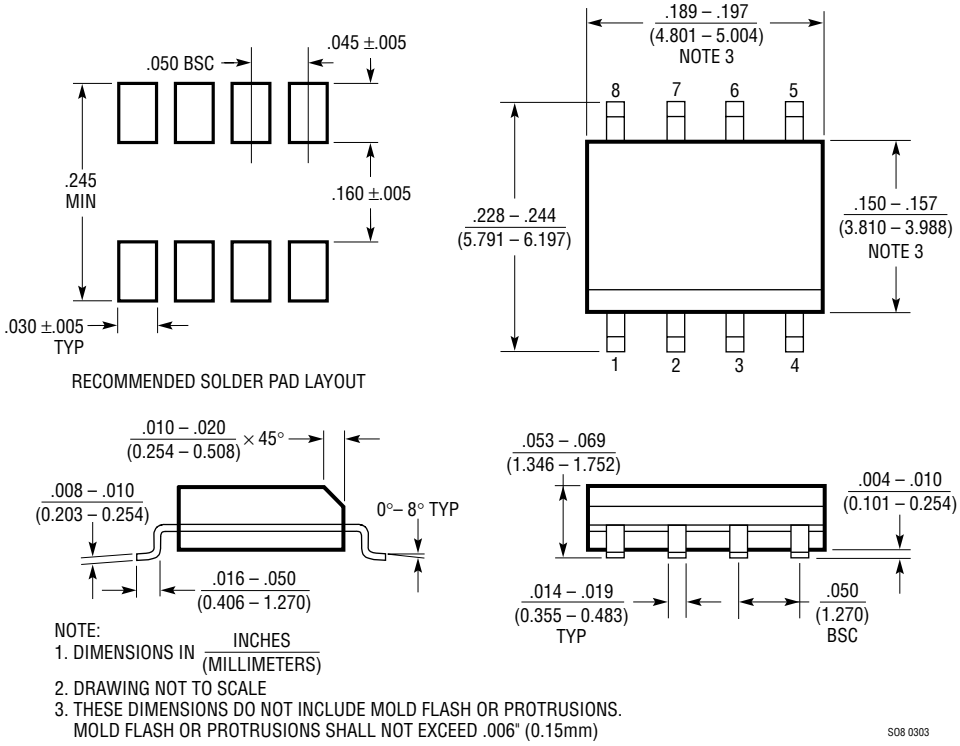

NOTE:
1. DIMENSIONS IN $\frac{\text{INCHES}}{(\text{MILLIMETERS})}$
2. DRAWING NOT TO SCALE
3. THESE DIMENSIONS DO NOT INCLUDE MOLD FLASH OR PROTRUSIONS.
   MOLD FLASH OR PROTRUSIONS SHALL NOT EXCEED .006" (0.15mm)

SO8 0303

Information furnished by Linear Technology Corporation is believed to be accurate and reliable. However, no responsibility is assumed for its use. Linear Technology Corporation makes no representation that the interconnection of its circuits as described herein will not infringe on existing patent rights.

TYPICAL APPLICATION

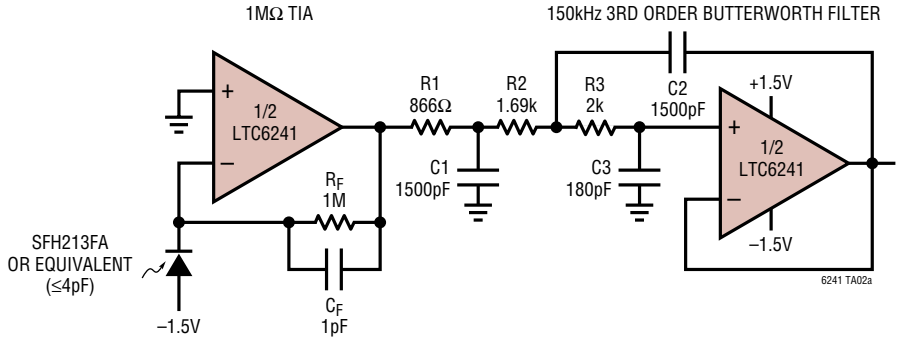

Figure 15. Ultralow Noise 1MΩ 150kHz Photodiode Amplifier

LTC6241 Output Noise Spectrum. 1MΩ Resistor Noise Dominates; Ideal Performance

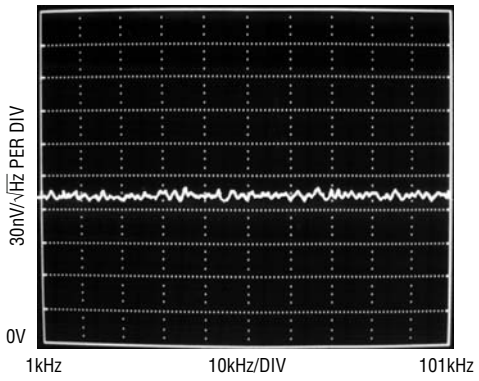

Competition Output Noise Spectrum. Op Amp Noise Dominates; Performance Compromised

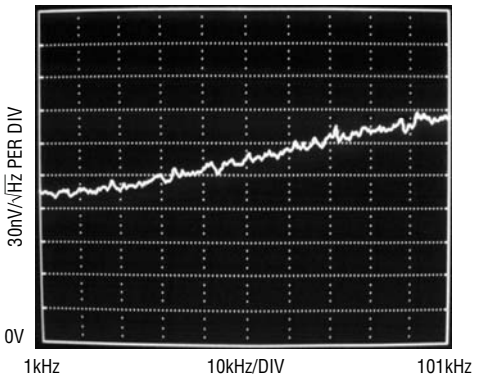

RELATED PARTS

PART NUMBER	DESCRIPTION	COMMENTS
LTC1151	±15V Zero-Drift Op Amp	Dual High Voltage Operation ±18V
LT1792	Low Noise Precision JFET Op Amp	6nV/√Hz Noise, ±15V Operation
LTC2050	Zero-Drift Op Amp	2.7 Volt Operation, SOT-23
LTC2051/LTC2052	Dual/Quad Zero-Drift Op Amp	Dual/Quad Version of LTC2050 in MS8/GN16 Packages
LTC2054/LTC2055	Single/Dual Zero-Drift Op Amp	Micropower Version of the LTC2050/LTC2051 in SOT-23 and DD Packages
LTC6244	Dual 50MHz Rail-to-Rail Op Amp	100µV $V_{OS(MAX)}$, 1pA I_{BIAS}, 40V/µV, Slew Rate

Linear Technology Corporation
1630 McCarthy Blvd., Milpitas, CA 95035-7417
(408) 432-1900 • FAX: (408) 434-0507 • www.linear.com
LT 0107 REV C • PRINTED IN USA
© LINEAR TECHNOLOGY CORPORATION 2005