LTC5542

# 1.6GHz to 2.7GHz High Dynamic Range Downconverting Mixer

## FEATURES

- **Conversion Gain: 8dB at 2.4GHz**
- **IIP3: 26.8dBm at 2.4GHz**
- **Noise Figure: 9.9dB at 2.4GHz**
- **High Input P1dB**
- **3.3V Supply, 660mW Power Consumption**
- **Shutdown Pin**
- **50Ω Single-Ended RF and LO Inputs**
- **LO Inputs 50Ω Matched when Shutdown**
- **High Isolation LO Switch**
- 0dBm LO Drive Level
- High LO-RF and LO-IF Isolation
- Small Solution Size
- 20-Lead (5mm × 5mm) QFN package

## APPLICATIONS

- Wireless Infrastructure Receivers (LTE, W-CDMA. TD-SCDMA, UMTS, GSM1800)
- High Dynamic Range Downmixer Applications

LT, LTC, LTM, Linear Technology and the Linear logo are registered trademarks of Linear Technology Corporation. All other trademarks are the property of their respective owners.

## DESCRIPTION

The LTC®5542 is part of a family of high dynamic range passive downconverting mixers covering the 700MHz to 4GHz frequency range. **The LTC5542 is optimized for 1.6GHz to 2.7GHz RF applications. The LO frequency must fall within the 1.7GHz to 2.5GHz range for optimum performance.** A typical application is a LTE or WiMAX receiver with a 2.3GHz to 2.7GHz RF input and low-side LO.

The LTC5542 is designed for 3.3V operation, however; the IF amplifier can be powered by 5V for the highest P1dB. An integrated SPDT LO switch with fast switching accepts two active LO signals, while providing high isolation.

The LTC5542's high conversion gain and high dynamic range enable the use of lossy IF filters in high-selectivity receiver designs, while minimizing the total solution cost, board space and system-level variation.

**High Dynamic Range Downconverting Mixer Family**

| PART# | RF RANGE | LO RANGE |
|---|---|---|
| LTC5540 | 600MHz –1.3GHz | 700MHz – 1.2GHz |
| LTC5541 | 1.3GHz – 2.3GHz | 1.4GHz – 2.0GHz |
| **LTC5542** | **1.6GHz – 2.7GHz** | **1.7GHz – 2.5GHz** |
| LTC5543 | 2.3GHz – 4GHz | 2.4GHz – 3.6GHz |

## TYPICAL APPLICATION

**Wideband Receiver**

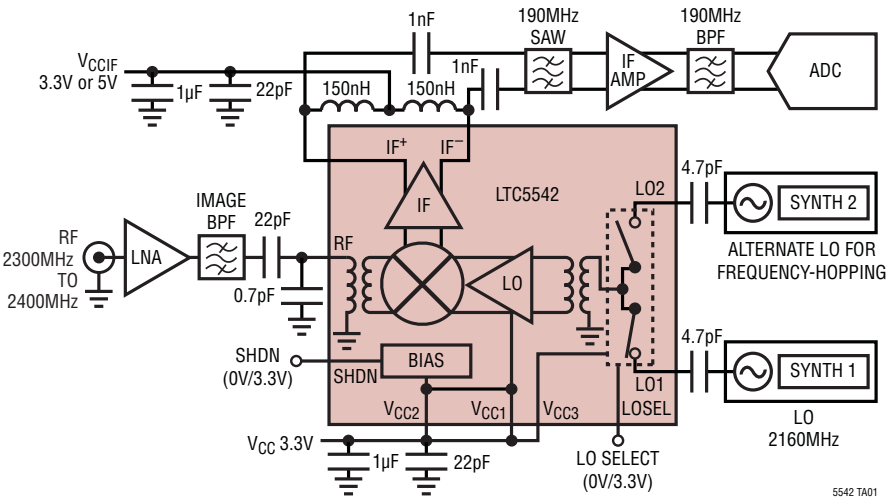


**Wideband Conversion Gain, IIP3 and NF vs IF Output Frequency**

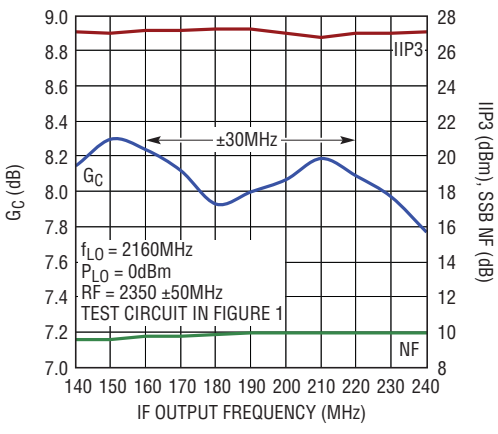

## ABSOLUTE MAXIMUM RATINGS

**(Note 1)**

Mixer Supply Voltage ($V_{CC1}$, $V_{CC2}$).....3.8V
LO Switch Supply Voltage ($V_{CC3}$).....3.8V
IF Supply Voltage ($IF^+$, $IF^-$) .....5.5V
Shutdown Voltage (SHDN).....–0.3V to $V_{CC}$ +0.3V
LO Select Voltage (LOSEL).....–0.3V to $V_{CC}$ +0.3V
LO1, LO2 Input Power (1GHz to 3GHz).....9dBm
LO1, LO2 Input DC Voltage .....±0.5V
RF Input Power (1GHz to 3GHz) .....15dBm
RF Input DC Voltage..... ±0.1V
Operating Temperature Range .....–40°C to 85°C
Storage Temperature Range .....–65°C to 150°C
Junction Temperature ($T_J$) ..... 150°C

## PIN CONFIGURATION

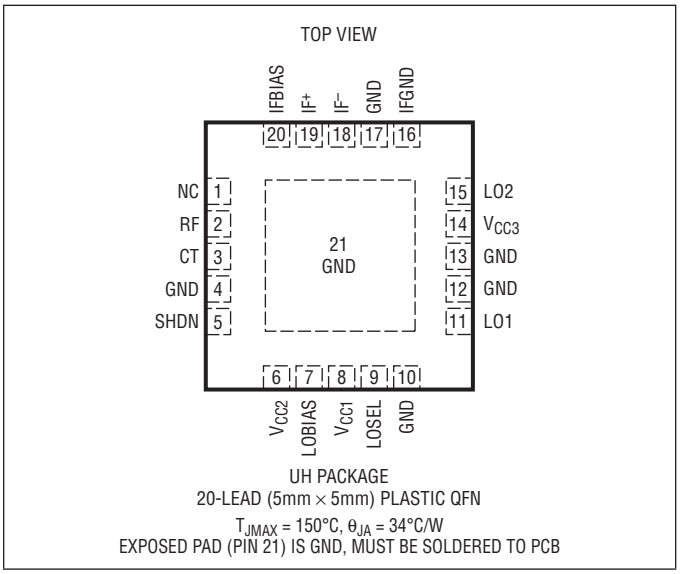


UH PACKAGE
20-LEAD (5mm × 5mm) PLASTIC QFN
$T_{JMAX}$ = 150°C, $\theta_{JA}$ = 34°C/W
EXPOSED PAD (PIN 21) IS GND, MUST BE SOLDERED TO PCB

## ORDER INFORMATION

| LEAD FREE FINISH | TAPE AND REEL | PART MARKING | PACKAGE DESCRIPTION | TEMPERATURE RANGE |
|---|---|---|---|---|
| LTC5542IUH#PBF | LTC5542IUH#TRPBF | 5542 | 20-Lead (5mm x 5mm) Plastic QFN | –40°C to 85°C |

Consult LTC Marketing for parts specified with wider operating temperature ranges.
Consult LTC Marketing for information on non-standard lead based finish parts.

For more information on lead free part marking, go to: http://www.linear.com/leadfree/
For more information on tape and reel specifications, go to: http://www.linear.com/tapeandreel/

## AC ELECTRICAL CHARACTERISTICS

**$V_{CC}$ = 3.3V, $V_{CCIF}$ = 3.3V, SHDN = Low, $T_A$ = 25°C, $P_{LO}$ = 0dBm, unless otherwise noted. Test circuit shown in Figure 1. (Notes 2, 3, 4)**

| PARAMETER | CONDITIONS | MIN | TYP | MAX | UNITS |
|---|---|---|---|---|---|
| LO Input Frequency Range | | | 1700 to 2500 | | MHz |
| RF Input Frequency Range | Low-Side LO<br>High-Side LO | | 1900 to 2700<br>1600 to 2300 | | MHz<br>MHz |
| IF Output Frequency Range | Requires External Matching | | 5 to 500 | | MHz |
| RF Input Return Loss | $Z_O$ = 50Ω, 1600MHz to 2700MHz | | >12 | | dB |
| LO Input Return Loss | $Z_O$ = 50Ω, 1700MHz to 2500MHz | | >12 | | dB |
| IF Output Return Loss | Requires External Matching | | >12 | | dB |
| LO Input Power | $f_{LO}$ = 1700MHz to 2500MHz | –4 | 0 | 6 | dBm |
| LO to RF Leakage | $f_{LO}$ = 1700MHz to 2500MHz | | <–32 | | dBm |
| LO to IF Leakage | $f_{LO}$ = 1700MHz to 2500MHz | | <–40 | | dBm |
| LO Switch Isolation | LO1 Selected, 1700MHz < $f_{LO}$ < 2500MHz<br>LO2 Selected, 1700MHz < $f_{LO}$ < 2500MHz | | 49<br>52 | | dB<br>dB |
| RF to LO Isolation | $f_{RF}$ = 1600MHz to 2700MHz | | >50 | | dB |
| RF to IF Isolation | $f_{RF}$ = 1600MHz to 2700MHz | | >35 | | dB |