Smart Card Interface with Serial Control

FEATURES

- **Electrical Specifications Are ISO7816-3 and EMV Compatible**
- **Control/Status Serial Port May be Daisy-Chained for Multicard Applications**
- **Automatic Shutdown on Electrical Faults**
- **Buck Boost Charge Pump Generates 5V, 3V or 1.8V Outputs (Smart Card Classes A, B and C)**
- Automatic Level Translation
- Dynamic Pull-Ups Deliver Fast Signal Rise Times
- Supervisory Functions Prevent Smart Card Faults
- Low Operating Current: 250µA Typical
- V_{IN}: 2.7V to 5.5V
- Ultralow Shutdown Current
- >10kV ESD on Smart Card Pins
- Small 24-Lead 4mm × 4mm QFN Package

APPLICATIONS

- Handheld Payment Terminals
- Pay Telephones
- ATM Machines
- POS Terminals
- Computer Keyboards
- Multiple S.A.M. Sockets

DESCRIPTION

The LTC®4556 provides all necessary power control, level translation and supervisory functions for a smart card or S.A.M. card interface. The part contains a low noise charge pump plus LDO for generating V_{CC} power, as well as all necessary level shifting circuitry.

The card voltage can be set to either 1.8V, 3V or 5V. The LTC4556 includes a card detection channel with automatic debounce circuitry. To reduce wiring costs, the LTC4556 interfaces to a microcontroller via a simple 4-wire serial interface. Multiple devices may be connected in daisy-chain fashion so that the number of wires to the card socket board is independent of the number of sockets. Status data is returned over the same interface.

Extensive security features ensure proper deactivation sequencing in the event of a supply fault or a smart card electrical fault. The smart card pins can withstand greater than 10kV ESD in-situ with no additional components. The LTC4556 is available in a small, low profile (0.75mm), 4mm × 4mm QFN package.

, LT, LTC, LTM, Linear Technology and the Linear logo are registered trademarks and ThinSOT is a trademark of Linear Technology Corporation. All other trademarks are the property of their respective owners. Protected by U.S. Patents, including 6356140, 6411531.

TYPICAL APPLICATION

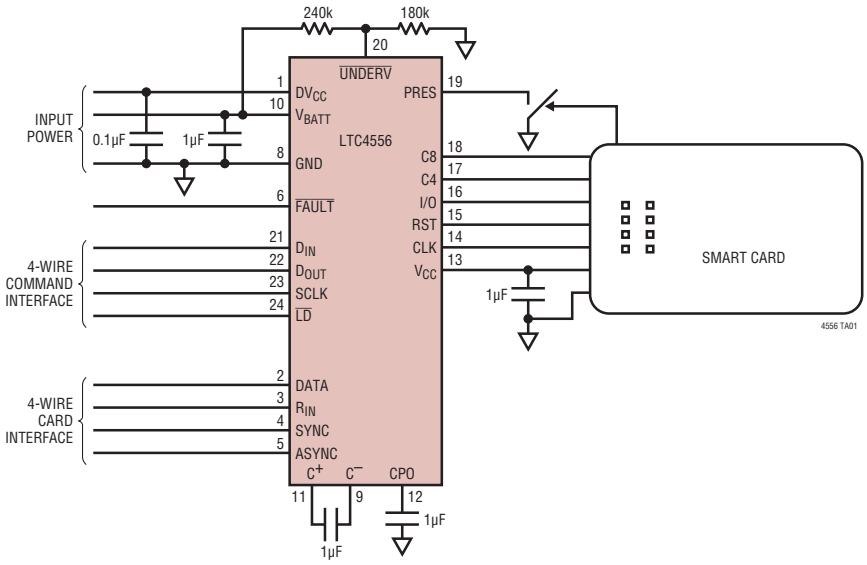

Deactivation Sequence

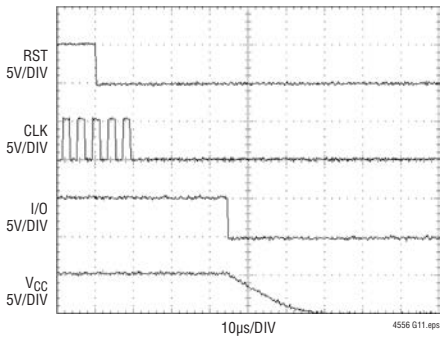

ABSOLUTE MAXIMUM RATINGS

(Note 1)

V_{BATT}, DV_{CC}, CPO, $\overline{FAULT}$, $\overline{UNDERV}$ to GND ..... –0.3V to 6.0V

PRES, DATA, R_{IN}, SYNC, ASYNC, $\overline{LD}$, D_{IN}, SCLK to GND ..... –0.3V to (DV_{CC} + 0.3V)

I/O, CLK .....–0.3V to (V_{CC} + 0.3V)

I_{CC} (Note 5) 65mA

V_{CC} Short-Circuit Duration ..... Indefinite

Operating Temperature Range (Note 4)....–40°C to 85°C

Storage Temperature Range ..... –65°C to 125°C

PIN CONFIGURATION

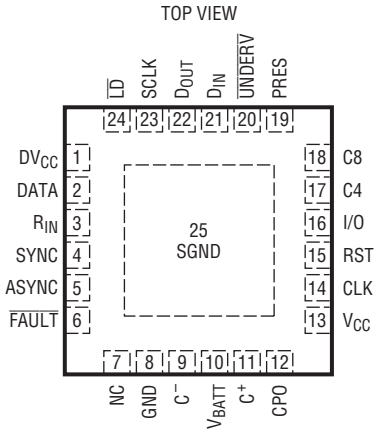

UF PACKAGE
24-LEAD (4mm × 4mm) PLASTIC QFN

T_{JMAX} = 125°C, θ_{JA} = 160°C/W
EXPOSED PAD (PIN #) IS GND, MUST BE SOLDERED TO PCB

ORDER INFORMATION

LEAD FREE FINISH	TAPE AND REEL	PART MARKING	PACKAGE DESCRIPTION	TEMPERATURE RANGE
LTC4556EUF#PBF	LTC4556EUF#TRPBF	4556	24-Lead (4mm x 4mm) Plastic QFN	–40°C to 85°C

Consult LTC Marketing for parts specified with wider operating temperature ranges. *The temperature grade is identified by a label on the shipping container.
Consult LTC Marketing for information on nonstandard lead based finish parts.

For more information on lead free part marking, go to: http://www.linear.com/leadfree/
For more information on tape and reel specifications, go to: http://www.linear.com/tapeandreel/

ELECTRICAL CHARACTERISTICS

The ● denotes the specifications which apply over the full operating temperature range, otherwise specifications are at T_A = 25°C. V_{BATT} = 3.3V, DV_{CC} = 3.3V unless otherwise noted.

PARAMETER	CONDITIONS		MIN	TYP	MAX	UNITS
Input Power Supply						
V_{BATT} Operating Voltage		●	2.7		5.5	V
I_{VBATT} Operating Current	V_{CC} = 5V, I_{CC} = 0µA	●		250	400	µA
I_{VBATT} Shutdown Current	No Card Present, V_{CPO} = 0V	●		0.5	1.75	µA
DV_{CC} Operating Voltage		●	1.7		5.5	V
I_{DVCC} Operating Current		●		5	25	µA
I_{DVCC} Shutdown Current		●		0.2	1.5	µA
Charge Pump						
R_{OLCP} 5V Mode Open-Loop Output Resistance	V_{BATT} = 3.075V, I_{CPO} = I_{CC} = 60mA, (Note 3)	●		8.2	17	Ω
CPO Turn On Time	I_{CC} = 0mA, 10% to 90%	●		0.6	1.5	ms

ELECTRICAL CHARACTERISTICS

The ● denotes the specifications which apply over the full operating temperature range, otherwise specifications are at T_A = 25°C. V_{BATT} = 3.3V, DV_{CC} = 3.3V unless otherwise noted.

PARAMETER	CONDITIONS		MIN	TYP	MAX	UNITS
Smart Card Supply						
V_{CC} Output Voltage	5V Mode, 0 < I_{CC} < 60mA 3V Mode, 0 < I_{CC} < 50mA 1.8V Mode, 0 < I_{CC} < 30mA	● ● ●	4.65 2.75 1.65	5.0 3.0 1.8	5.35 3.25 1.95	V V V
V_{CC} Turn On-Time	I_{CC} = 0mA, 10% to 90%	●		0.8	1.5	ms
Undervoltage Detection	Relative to Nominal Output	●	–9	–5	–2.5	%
Overcurrent Detection		●	60	110	150	mA
Smart Card Detection						
Debounce Time (↓ PRES to ↑ D7)		●	15	32	60	ms
PRES Pull-Up Current	V_{PRES} = 0	●		1	2.5	µA
Deactivation Time (↓ RST to V_{CC} = 0.4V)	I_{CC} = 0mA, CV_{CC} = 1µF	●		100	250	µs
CLK (Non-Bidirectional Modes)						
Low Level Output Voltage (V_{OL}), (Note 2)	Sink Current = –200µA	●			0.2	V
High Level Output Voltage (V_{OH}), (Note 2)	Source Current = 200µA	●	V_{CC} – 0.2			V
Rise/Fall Time, (Note 2)	Loaded with 50pF, 10% to 90%	●			16	ns
CLK Frequency, (Note 2)		●	10			MHz
RST, C4, C8						
Low Level Output Voltage (V_{OL}), (Note 2)	Sink Current = –200µA	●			0.2	V
High Level Output Voltage (V_{OH}), (Note 2)	Source Current = 200µA	●	V_{CC} – 0.2			V
Rise/Fall Time, (Note 2)	Loaded with 50pF, 10% to 90%	●			100	ns
I/O, CLK (CLK Specifications in Bidirectional Mode Only)						
Low Level Output Voltage (V_{OL}), (Note 2)	Sink Current = –1mA (V_{DATA} = 0V or V_{SYNC} = 0V)	●			0.3	V
High Level Output Voltage (V_{OH}), (Note 2)	Source Current = 20µA (V_{DATA} = V_{DVCC} or V_{SYNC} = V_{DVCC})	●	0.85 • V_{CC}			V
Rise/Fall Time, (Note 2)	Loaded with 50pF, 10% to 90%	●			500	ns
Short Circuit Current, (Note 2)	V_{DATA} = 0V or V_{SYNC} = 0V	●		5	10	mA
DATA, SYNC (SYNC Specifications in Bidirectional Mode Only)						
Low Level Output Voltage (V_{OL})	Sink Current = –500µA ($V_{I/O}$ = 0V or V_{CLK} = 0V)	●			0.3	V
High Level Output Voltage (V_{OH})	Source Current = 20µA ($V_{I/O}$ = V_{CC} or V_{CLK} = V_{CC})	●	0.8 • DV_{CC}			V
Rise/Fall Time	Loaded with 50pF	●			500	ns
R_{IN}, D_{IN}, SCLK, $\overline{LD}$, SYNC, ASYNC (SYNC Specifications for Non-Bidirectional Mode)						
Low Input Threshold (V_{IL})		●			0.15 • DV_{CC}	V
High Input Threshold (V_{IH})		●	0.85 • DV_{CC}			V
Input Current (I_{IH}/I_{IL})		●	–1		1	µA
D_{OUT}						
Low Level Output Voltage (V_{OL})	Sink Current = –200µA	●			0.3	V
High Level Output Voltage (V_{OH})	Source Current = 200µA	●	DV_{CC} – 0.3			V
$\overline{UNDERV}$						
Threshold		●	1.17	1.23	1.29	V
Leakage Current	$V_{\overline{UNDERV}}$ = 3.3V	●			50	nA

ELECTRICAL CHARACTERISTICS

The ● denotes the specifications which apply over the full operating temperature range, otherwise specifications are at T_A = 25°C. V_{BATT} = 3.3V, DV_{CC} = 3.3V unless otherwise noted.

PARAMETER		CONDITIONS		MIN	TYP	MAX	UNITS
$\overline{FAULT}$							
Low Level Output Voltage (V_{OL})		Sink Current = –200µA	●		0.005	0.3	V
Leakage Current		$V_{\overline{FAULT}}$ = 5.5V	●			1	µA
Serial Port Timing							
t_{DS}	D_{IN} Valid to SCLK Setup			8			ns
t_{DH}	D_{IN} Valid to SCLK Hold			8			ns
t_{DD}	D_{OUT} Output Delay	C_{LOAD} = 15pF		15		60	ns
t_L	SCLK Low Time			50			ns
t_H	SCLK High Time			50			ns
t_{CL}	SCLK to $\overline{LD}$			50			ns
t_{LC}	$\overline{LD}$ to SCLK			0			ns
t_{LFC}	$\overline{LD}$ Falling to SCLK			50			ns

Note 1: Stresses beyond those listed under Absolute Maximum Ratings may cause permanent damage to the device. Exposure to any Absolute Maximum Rating condition for extended periods may affect device reliability and lifetime.

Note 2: This specification applies to all three smart card voltage classes: 1.8V, 3V and 5V.

Note 3: $R_{OLCP} \equiv (2V_{BATT} – V_{CPO})/I_{CPO}$; V_{CPO} will depend upon total load (I_{CC}) and minimum supply voltage V_{BATT}. See Figure 6.

Note 4: The LTC4556E is guaranteed to meet performance specifications from 0°C to 70°C. Specifications over the –40°C to 85°C operating temperature range are assured by design, characterization and correlation with statistical process controls.

Note 5: Based on long term current density limitation.

TYPICAL PERFORMANCE CHARACTERISTICS

No Load Supply Current vs V_{BATT}

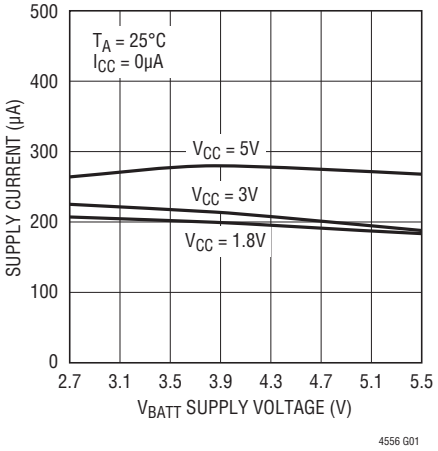

I/O and CLK Short-Circuit Current vs Temperature (CLK in Bidirectional Mode)

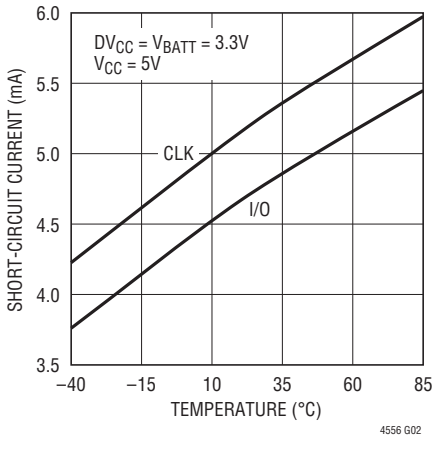

Charge Pump Open-Loop Output Resistance vs Temperature ($2V_{BATT} – V_{CPO}$) / I_{CPO}

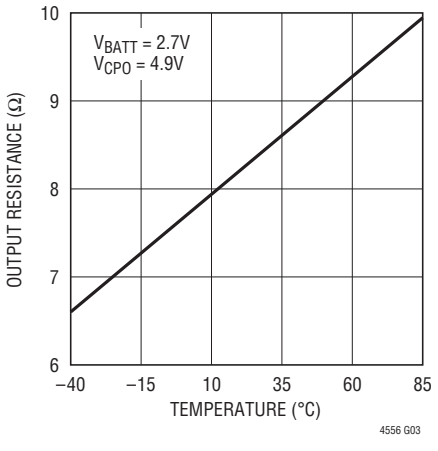

TYPICAL PERFORMANCE CHARACTERISTICS

V_{CC} Overcurrent Shutdown Threshold vs Temperature

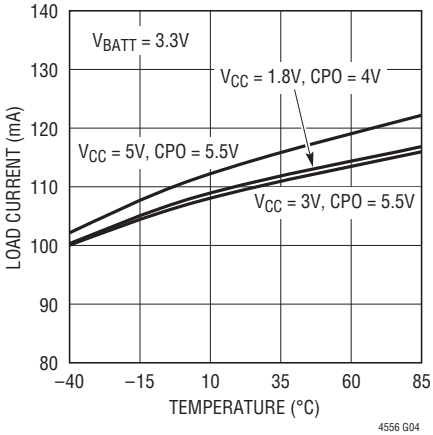

Card Detection Debounce Time vs V_{BATT} Supply Voltage

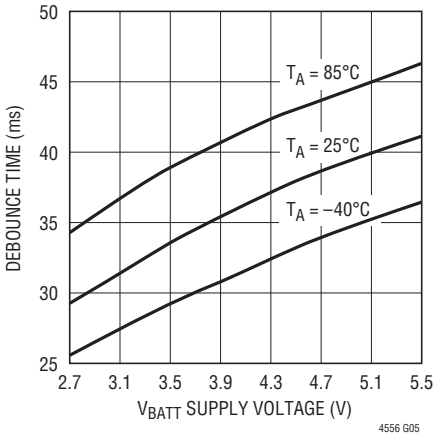

Bidirectional Channel (I/O) Low Output Level vs Temperature

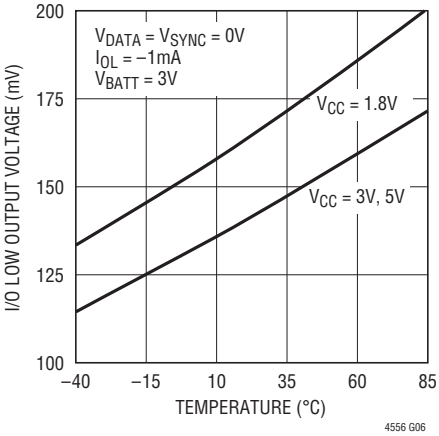

Extra Input Current vs Load Current ($I_{BATT} – 2I_{CC}$)

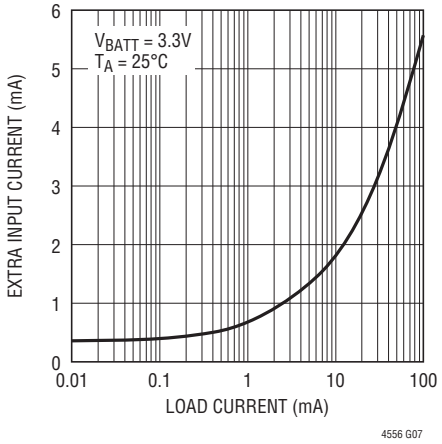

V_{BATT} Shutdown Current vs Supply Voltage

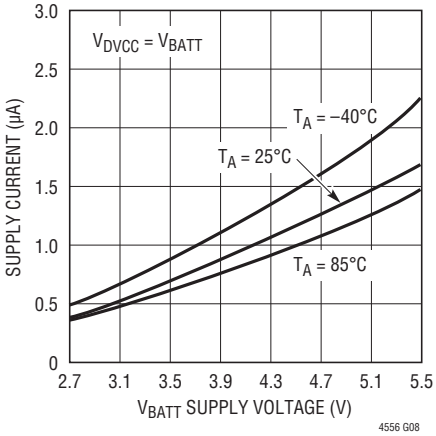

DV_{CC} Shutdown Current vs Supply Voltage

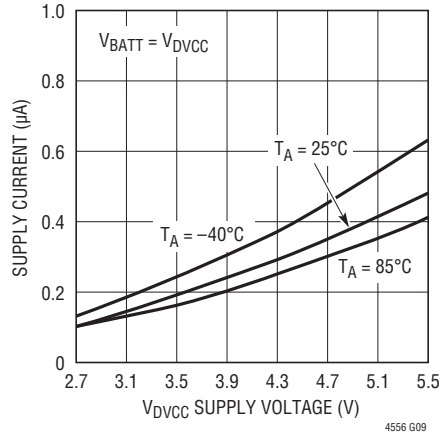

Charge Pump and LDO Activation

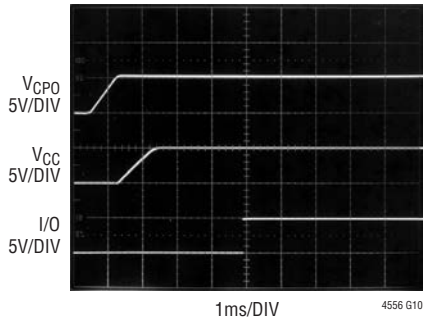

Deactivation Sequence

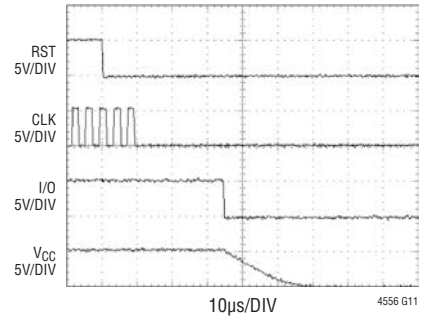

Data – I/O Channel

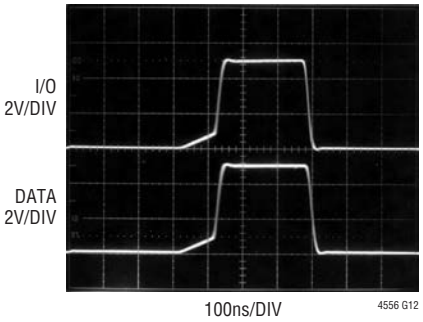

PIN FUNCTIONS

DV_{CC} (Pin 1): Power. Reference voltage for the control logic.

DATA (Pin 2): Input/Output. Microcontroller side data I/O pin. The DATA pin provides the bidirectional communication path to the smart card. The card may be selected to communicate via the DATA pin. If several LTC4556s are connected in parallel, the DATA pin can be made high impedance by selecting neither card socket. The C4 and C8 synchronous card pins can be selected to connect to the DATA pin via the serial port (see Table 4).

R_{IN} (Pin 3): Input. The R_{IN} pin supplies the RST signal to the smart card. It is level shifted and transmitted directly to the RST pin of a selected card. When the card is deselected, the RST pin is latched at its current state.

SYNC (Pin 4): Input-Input/Output. The SYNC pin provides the clock input for synchronous smart cards. When a synchronous card is selected, its CLK pin follows SYNC directly. When a synchronous card is deselected, the CLK pin is latched at its current state. In bidirectional mode, the SYNC pin becomes an input/output with the smart card CLK pin.

ASYNC (Pin 5): Input. The ASYNC pin provides the clock input for asynchronous cards and should be connected to a free running clock. The clock signal to the smart card can be a ÷1, ÷2, ÷4 or ÷8 version of the signal on ASYNC. Asynchronous cards can also be placed in clock stop mode with the clock stopped either high or low.

$\overline{\text{FAULT}}$ (Pin 6): Output. The $\overline{\text{FAULT}}$ pin can be used as an interrupt to a microcontroller to indicate when a fault has occurred. It is an open drain output, which is logically equivalent to $\overline{\text{D4}}$. (See Table 1)

NC (Pin 7): No Connection to chip. May be grounded.

GND (Pin 8): Ground. Power ground for the chip. This pin should be connected directly to a low impedance ground plane.

C^-, C^+ (Pins 9, 11): Charge Pump. Charge pump flying capacitor pins. A 1µF X5R or X7R ceramic capacitor should be connected from C^+ to C^-.

V_{BATT} (Pin 10): Power. Supply voltage for analog and power sections of the LTC4556.

CPO (Pin 12): Charge Pump. CPO is the output of the charge pump. When the smart card requires power, the charge pump will charge CPO to either 3.7V or 5.35V depending on what smart card voltage is required. A low impedance 1µF X5R or X7R ceramic capacitor is required on CPO.

V_{CC} (Pin 13): Card Socket. The V_{CC} pin should be connected to the V_{CC} pin of the smart card socket. The activation of the V_{CC} pin is controlled by the serial port (see Tables 1 and 2) and can be set to 0V, 1.8V, 3V or 5V.

CLK (Pin 14): Card Socket. The CLK pin should be connected to the CLK pin of the smart card socket. The CLK signal can be derived from either the SYNC input or the ASYNC input depending on which type of card is being accessed. The card type is selected via the serial port (see Tables 1 and 3). In bidirectional mode, the CLK pin becomes an input/output with the microcontroller side SYNC pin.

RST (Pin 15): Card Socket. This pin should be connected to the RST pin of the smart card socket. The RST signal is derived from the R_{IN} pin. When the card is selected, its RST pin follows R_{IN}. When the card is deselected, the RST pin holds the current value on R_{IN}.

I/O (Pin 16): Card Socket. The I/O pin connects to the I/O pin of the smart card socket. When the smart card is selected, its I/O pin connects to the DATA pin. When the smart card is deselected, its I/O pin returns to the idle state (H).

C4, C8 (Pins 17, 18): Card Socket. These pins connect to the C4 and C8 pins of synchronous memory cards on the smart card socket. The signal for these pins is unidirectional and can only be sent to the card. Data for C4 and C8 is transmitted via the DATA pin and may be selected in place of I/O via the serial port (see Table 4). When either C4 or C8 is selected, it will follow the DATA pin. When it is deselected, it will remain latched at its current state.

PRES (Pin 19): Card Socket. The PRES pin is used to detect the presence of a smart card. It should be connected to a normally open detection switch on the smart card acceptor's socket. This pin has a pull-up current source on-chip so no external components are required.

PIN FUNCTIONS

$\overline{\text{UNDERV}}$ (Pin 20): Input. The $\overline{\text{UNDERV}}$ pin provides security by supplying a precision undervoltage threshold for external supply monitoring. An external resistive voltage divider programs the desired undervoltage threshold. Once $\overline{\text{UNDERV}}$ falls below 1.23V, the LTC4556 automatically begins the deactivation sequence.

If external supply monitoring is not required, the $\overline{\text{UNDERV}}$ pin should be connected to either V_{BATT} or DV_{CC}.

D_{IN} (Pin 21): Input. Input for the serial port. Command data is shifted into D_{IN} synchronously with SCLK. D_{IN} can be connected directly to a microcontroller or the D_{OUT} pin of another LTC4556 or LTC1955 for daisy chained operation.

D_{OUT} (Pin 22): Output. Output for the serial port. Smart card status data is shifted out of D_{OUT} synchronously with SCLK. D_{OUT} can be connected directly to a microcontroller or the D_{IN} pin of another LTC4556 or LTC1955 for daisy chained operation.

SCLK (Pin 23): Input. The SCLK pin clocks the serial port. Each new data bit is received on the rising edge of SCLK. SCLK should be left high during idle times and should not be clocked when $\overline{\text{LD}}$ is low.

$\overline{\text{LD}}$ (Pin 24): Input. The falling edge of this pin loads the current state of the shift register into the command register. Command changes to the smart card will be updated on the falling edge of $\overline{\text{LD}}$. The rising edge of $\overline{\text{LD}}$ latches status information into the shift register for the next read/write cycle.

SGND (Pin 25): Exposed Pad. Must be soldered to PCB Ground.

BLOCK DIAGRAM

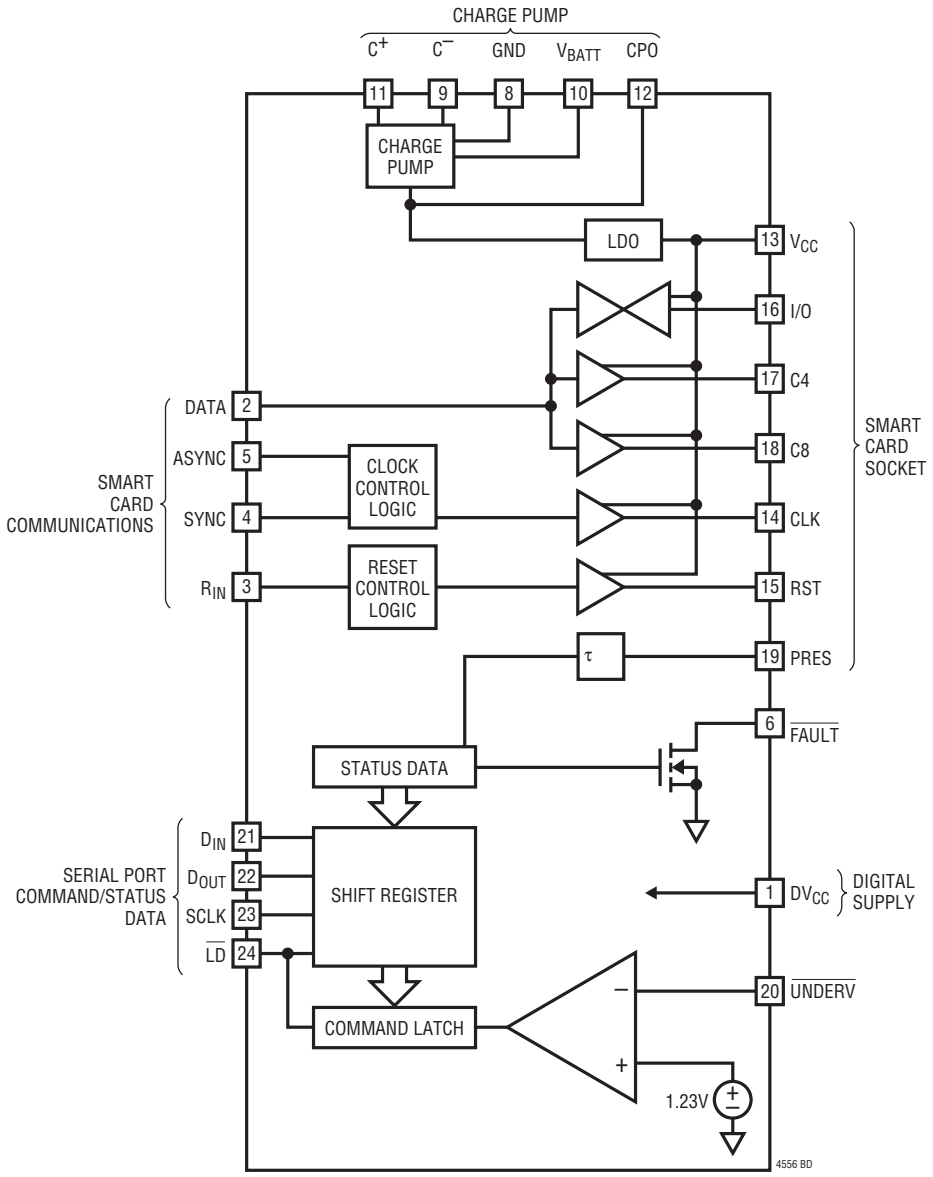

OPERATION

Serial Port

The microcontroller compatible serial port provides all of the command and control inputs for the LTC4556 as well as the status of the smart card. Data on the D_{IN} input is loaded on the rising edge of SCLK. D7 is loaded first and D0 last. At the same time the command bits are being shifted into the D_{IN} input, the status bits are being shifted out of the D_{OUT} output. The status bits are presented to D_{OUT} on the rising edge of SCLK. Once all bits have been clocked into the shift register, the command data is loaded into the command latch by bringing $\overline{LD}$ low. At this time the command latch is updated and the LTC4556 will begin to act on the new command set. The status data is latched into the shift register on the rising edge of $\overline{LD}$. SCLK should be low when $\overline{LD}$ is brought low and should be high when $\overline{LD}$ is brought high. This requires a 9th clock cycle per transaction. Figure 2 shows the recommended operation of the serial port.

Multiple LTC4556s may be daisy chained together by connecting the D_{OUT} pin of one LTC4556 to the D_{IN} pin of another. Figure 7 shows an example of an LTC4556 daisy chained together with LTC1955s.

The maximum clock rate for the serial port is 10MHz.

The serial port controls the following parameters of the smart card socket:

- Selection/deselection of the smart card
- V_{CC} voltage level of the card (5V/3V/1.8V/0V)
- Clock mode of the card (synchronous, asynchronous or bidirectional)
- Operating mode of asynchronous cards (clock stop high, low, ÷1, ÷2, ÷4 or ÷8)
- Selection of the I/O, C4 or C8 pins

The serial port provides the following status data:

- It indicates the presence or absence of the smart card.
- It indicates the readiness of the smart card V_{CC} supply. Communication with the smart card is disabled until its power supply voltage has reached the final value.
- It indicates fault status. In the event of an electrical or ATR fault, the fault is reported. For electrical faults, the LTC4556 will automatically deactivate the smart card.

Table 1 illustrates the command inputs and status outputs associated with each bit of the serial data word.

Three voltage options are available from the LTC4556: 5V, 3V and 1.8V. Bits D0, D1 determine which voltage is selected. Setting both control bits to 0 deactivates the card and sets the smart card supply voltage to 0V. Table 2 shows the operation of the supply control bits.

The CLK pin to the smart card can be programmed for various modes. Both synchronous and asynchronous cards are supported. There are several options available with asynchronous cards. Table 3 shows how all clock options are obtained using bits D5–D7.

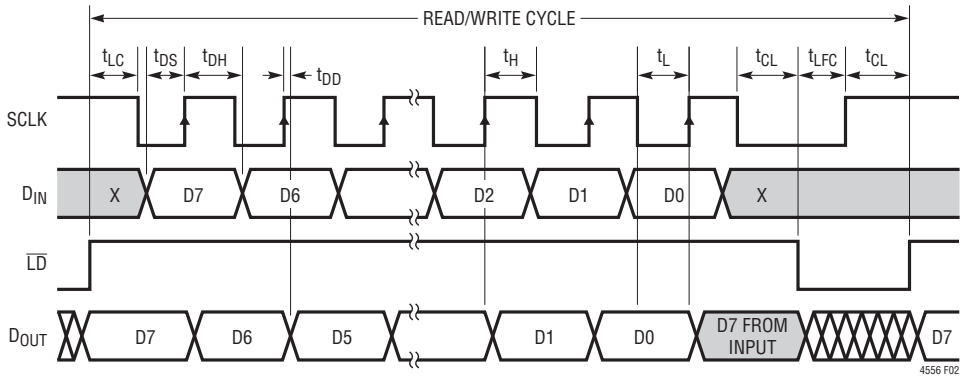

Figure 2. Serial Port Timing Diagram

OPERATION

Table 1. Serial Port Commands

STATUS OUTPUT	BIT	COMMAND INPUT
0	D0	V_{CC} Options
0	D1	(See Table 2)
0	D2	Card Select/Deselect
0	D3	Card Communications
Card Electrical Fault	D4	Options (See Table 4)
Card ATR Fault	D5	Card Clock Options
Card V_{CC} Ready	D6	(See Table 3)
Card Present	D7	

Table 2. V_{CC} and Shutdown Options

D1	D0	STATUS
0	0	V_{CC} = 0V (Shutdown)
0	1	V_{CC} = 1.8V
1	0	V_{CC} = 3V
1	1	V_{CC} = 5V

Table 3. Clock Options

D7	D6	D5	CLOCK MODE
0	0	0	Synchronous Mode
0	0	1	Bidirectional Mode
0	1	0	Asynchronous Stop Low
0	1	1	Asynchronous Stop High
1	0	0	Asynchronous ÷1
1	0	1	Asynchronous ÷2
1	1	0	Asynchronous ÷4
1	1	1	Asynchronous ÷8

To receive status data from the serial port, a read/write operation must be performed. When polling for the presence of a smart card, the input word may be set to $00 since this is the shutdown command for the LTC4556.

Data Channel

The data channel is level shifted to the appropriate V_{CC} voltages at the I/O pin.

An NMOS pass transistor performs the level shifting. The gate of the NMOS transistor is biased such that the transistor is completely off when both sides have relinquished the channel. If one side of the channel asserts an L, then the transistor will convey the L to the other side. Note that current passes from the receiving side of the channel to the transmitting side. The low output voltage of the receiving side will be dependent upon the voltage at the transmitting side plus the IR drop of the pass transistor.

When a card socket is selected, it becomes a candidate to drive data on the DATA pin and likewise receive data from the DATA pin. When a card socket is deselected, the voltage on its I/O pin will return to the idle state (H) and the DATA side of that channel will become high impedance.

The LTC4556 includes provision for unidirectional communication with the C4 and C8 pins of the smart card. The C4, C8 and I/O pins are individually multiplexed to the DATA pin using bits D3 and D4 as shown in Table 4.

Table 4. Communications Options

D4	D3	COMMUNICATION MODE
0	0	Nothing Selected
0	1	C4 Connected to DATA Pin
1	0	C8 Connected to DATA Pin
1	1	I/O Connected to DATA Pin

Dynamic Pull-Up Current Sources

The current sources on the bidirectional pins (DATA, I/O) are dynamically activated to achieve a fast rise time with a relatively small static current. Once a bidirectional pin is relinquished, a small start up current begins to charge the node. An edge rate detector determines if the pin is released by comparing its slew rate with an internal reference value. If a valid transition is detected, a large pull-up current enhances the edge rate on the node. The higher slew rate corroborates the decision to charge the node thereby affecting a dynamic form of hysteresis.

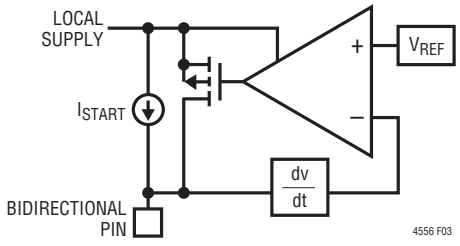

Figure 3. Dynamic Pull-Up Current Sources

OPERATION

As described in the section Serial Port, the LTC4556 supports both synchronous and asynchronous smart cards. When bits D5-D7 are set to 0s, the clock channel is in synchronous mode.

In synchronous mode, the CLK pin follows the SYNC pin for a channel that is selected. If the channel is deselected (via the serial port) the CLK line is latched at its current value.

When control bits D7, D6 and D5 are set to 0, 0 and 1 respectively, the clock channel is in bidirectional mode. This mode permits clock stretching when communicating with bidirectional cards. The bidirectional level translation circuit is identical to the I/O-DATA circuit. A low can be asserted from either the SYNC pin or the CLK pin and the other pin will follow. The low can be "handed off" to affect clock stretching if both sides assert at the same time. It will not run as fast as the unidirectional synchronous or asynchronous modes but does employ accelerating pull-up sources on both sides for maximum clock rate.

In asynchronous mode the CLK pin follows either the ASYNC pin (÷1 mode) or a divided version of this pin. The CLK pin can also be stopped high or low. The available divider ratios include ÷2, ÷4 and ÷8. When switching between divider ratios, the internal selection circuitry ensures that no spikes or glitches appear on the CLK pin. Consequently, it may take up to 8 clock pulses for the clock frequency change command to take affect. Synchronization circuitry ensures that no glitches occur when entering or exiting one of the stop modes. For example, when entering Stop Low mode, the selection circuitry waits for the next falling edge of the CLK signal to make the change. Likewise if Stop High is selected it will occur on the next rising edge.

Deselection of an asynchronous card does not affect its CLK pin. Its clock can be started, stopped or its divider ratio changed at any time.

To clean up the duty cycle of the incoming clock in asynchronous applications, any of the clock divider modes ÷2, ÷4 or ÷8 will yield a very nearly 50% duty cycle.

Additional synchronization circuitry prevents glitches from occurring when switching between synchronous mode and asynchronous mode. Because of this circuitry, two edges (a falling edge followed by a rising edge) are necessary at the CLK pin to switch modes from asynchronous to synchronous. For example, if clock stop mode is engaged, the clock channel will not change modes until clock stop mode is disengaged.

Both SYNC and ASYNC inputs are independently level shifted to the appropriate voltage for the CLK pin (5V, 3V, 1.8V).

Reset Channel

When the card is selected, the reset channel provides a level shifted path from the R_{IN} pin to the RST pin. When the card is deselected its RST pin is latched at the current value of R_{IN}.

Smart Card Detection Circuit

The PRES pin is used to detect the presence of a smart card. An automatic debounce circuit waits until a smart card has been present for a continuous period of typically 32ms. Once a valid card indication exists, the status bit is updated and may be polled by cycling data through the serial port. The D_{OUT} pin (equivalent to D7) of the serial port can be used to indicate the presence of a card in real time if $\overline{LD}$ is held low.

The PRES pin has a built-in pull-up current source so no external components are required for switch detection. The pull-up current source is designed to have a small current when the pin voltage is below approximately 1V but somewhat higher current when the pin voltage reaches 1V. This helps maintain low power dissipation when a card is present and yet fast response time to a card removal.

Activation/Deactivation

For maximum flexibility, the activation sequencing of the smart card is left to the application programmer. However, deactivation can be achieved either manually or automatically. An electrical fault condition will trigger the automatic deactivation.

OPERATION

The built-in deactivation sequence can be executed via the serial port simply by setting the control bits D0 and D1 to 0. The deactivation sequence is outlined below.

1. The RST pin is immediately brought low.
2. The deactivation of the CLK pin depends upon which type of card is used:

   If the smart card was set to asynchronous mode then the CLK pin will be latched low on its next falling edge. If no falling edges occur within 5µs (min) then the CLK line is forced low.

   If the smart card was set to synchronous mode then the CLK pin is immediately latched at its current value (either high or low) and then forced low after a duration of 5µs (min). During the 5µs timeout period, changes on SYNC will be ignored.
3. The I/O, C4 and C8 pins are brought low.
4. The V_{CC} pin is brought low.

Upon activation, to comply with relevant smart card standards, none of the smart card signal pins will be allowed to go high before the smart card supply voltage (V_{CC}) has reached its final value.

Electrical Fault Detection

Several types of faults are detected by the LTC4556. They include V_{CC} undervoltage, V_{CC} overcurrent, CLK, RST, C8, C4 short circuit, card removal during a transaction, failed answer to reset (ATR), supply undervoltage or $\overline{\text{UNDERV}}$ and chip overtemperature. To prevent false errors from plaguing the microcontroller, the electrical faults are acted upon only after a 5µs (min) timeout period. Card removal during transaction faults initiate the deactivation sequence immediately.

V_{CC} undervoltage faults are determined by comparing the actual output voltage with the internal reference voltage. If the output is more than ~5% below its set point for the entire timeout period, the fault is reported and the deactivation sequence is initiated.

V_{CC} overcurrent faults are detected by comparing the output current of the LDOs with an internal reference level. If the current of the LDO is more than 110mA (typ) for the entire timeout period, the fault is reported and the deactivation sequence is initiated.

CLK and RST faults are detected by comparing the outputs of these pins with their expected signals. If the signal on a pin is incorrect for the entire timeout period, the fault is reported and the deactivation sequence is initiated.

The clock channel is a special case. Since it can have a free running clock, the error indication is accumulated over a longer period of time without being cleared. Even though the clock may be running, an error will still be detected.

An overtemperature fault is detected by sensing the junction temperature of the IC. If the junction temperature exceeds approximately 150°C for the entire timeout period, the fault is reported by setting the fault bit (D4) and the deactivation sequence is initiated.

A card removal fault is determined as soon as the PRES pin is high. Once this occurs the fault is reported and the deactivation sequence is initiated.

If no card is present, and the application software attempts to power up a card socket, an automatic fault will result.

Short circuits on the I/O line will not be detected by the fault detection hardware; however, a short circuit from I/O to V_{CC} will be compliant with the maximum current limits set by applicable standards (<15mA). The same is true of the CLK pin when it is set to bidirectional mode.

Answer to Reset (ATR) Fault Detection

Answer to Reset faults are detected by an internal counter that is started once the RST line goes high. If the DATA pin remains high for 40,000 clock cycles, the ATR fault bit is set in the serial port's status register (see Table 1).

An ATR fault can not occur if the clock mode is set to synchronous. ATR faults will only occur for asynchronous smart cards.

OPERATION

ATR faults are cleared by bringing the RST pin low via R_{IN}.

An ATR fault will not automatically deactivate the smart card. It is the application programmer's responsibility to check the status register for ATR faults and deactivate the smart card in accordance with smart card standards. Generally, the application has 50ms (EMV 2.1.3.1, 2.1.3.2) from the 40,000th clock pulse to deactivate the card. Once the LTC4556 receives the deactivation command, it will shut down the smart card in less than 250µs.

Using the $\overline{\text{FAULT}}$ Pin

The $\overline{\text{FAULT}}$ pin can be used as an interrupt to a microcontroller. It is an open-drain output and generally requires a pull-up resistor. The $\overline{\text{FAULT}}$ pin will go low when an electrical fault occurs. The $\overline{\text{FAULT}}$ pin is logically equivalent to $\overline{\text{D4}}$ (see Table 1).

APPLICATIONS INFORMATION

10kV ESD Protection

All smart card pins (CLK, RST, I/O, C4, C8 and V_{CC}) can withstand over 10kV of human body model ESD in-situ. In order to ensure proper ESD protection, careful board layout is required. The GND pin should be tied directly to a ground plane. The multilayer ceramic chip V_{CC} capacitor should be located very close to the V_{CC} pin and tied immediately to the ground plane.

Capacitor Selection

Warning: A polarized capacitor such as tantalum or aluminum should never be used for the flying capacitor since its voltage can reverse upon start up of the LTC4556. Low ESR ceramic capacitors should always be used for the flying capacitor.

A total of four capacitors are required to operate the LTC4556. An input bypass capacitor is required at V_{BATT} and DV_{CC}. An output bypass capacitor is required on the smart card V_{CC} pin. A charge pump flying capacitor is required from C^+ to C^- and a charge storage capacitor is required on the charge pump out pin CPO.

To prevent excessive noise spikes due to charge pump operation, low ESR (equivalent series resistance) multilayer ceramic chip capacitors are strongly recommended.

There are several types of ceramic capacitors available each having considerably different characteristics. For example, X7R/X5R ceramic capacitors have excellent voltage and temperature stability but relatively low packing density. Y5V ceramic capacitors have apparently higher packing density but poor performance over their rated voltage or temperature ranges. Under certain voltage and temperature conditions Y5V and X7R/X5R ceramic capacitors can be compared directly by case size rather than specified value for a desired minimum capacitance.

Placement of the capacitors is critical for correct operation of the LTC4556. Because the charge pump generates large current steps, all of the capacitors should be placed as close to the LTC4556 as possible. The low impedance nature of multilayer ceramic chip capacitors will minimize voltage spikes but only if the power path is kept very short (i.e., minimum inductance). The V_{BATT} node should be especially well bypassed. The capacitor for this node should be directly adjacent to the QFN package. The CPO and flying capacitors should be very close as well. The LTC4556 can tolerate more distance between the LDO capacitor and the V_{CC} pin.

Figure 4 shows an example of a tight printed circuit board layout using single layer copper. For best performance a multilayer board can be used and should employ a solid ground plane on at least one layer.

The following capacitors are recommended for use with the LTC4556:

	TYPE	VALUE	CASE SIZE	MURATA P/N
BATT, CPO, C_{FLY}, V_{CC}	X5R	1µF	0603	GRM39 X5R 105K 6.3
CDV_{CC}	X5R	0.1µF	0402	GRM36 X5R 104K 10

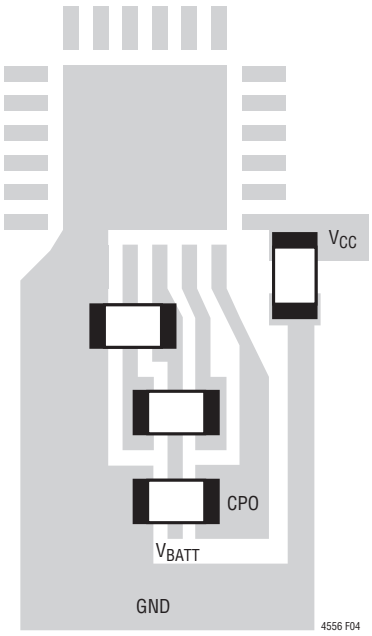

Figure 4. Optimum Single Layer PCB Layout

APPLICATIONS INFORMATION

Interfacing to a Microcontroller

The serial port of the LTC4556 can be connected directly to a 68HC11 style microcontroller's serial port. The microcontroller should be configured as the master device and its clock's idle state should be set to high (MSTR = 1, CPOL = 1 and CPHA = 0 for the MC68HC11 family). Figure 5 shows the recommended configuration and direction of data flow. Note that an additional I/O line is necessary for $\overline{LD}$ to load the data once it has shifted around the loop. Command data is latched into the command register on the falling edge of the $\overline{LD}$ signal. The LTC4556 will begin to act on new command data as soon as $\overline{LD}$ goes low. Any general purpose microcontroller I/O line can be configured to control the $\overline{LD}$ pin.

The status of the LTC4556 is returned over the serial port. Status data is latched into the shift register on the rising edge of the $\overline{LD}$ pin. Whenever the system is waiting for status data from the LTC4556, its $\overline{LD}$ pin should be held low.

Daisy-Chained Operation

For applications requiring more than one card socket, the serial port of the LTC4556 is designed to be easily daisy-chained. The D_{OUT} pin of one LTC4556 can be connected directly to the D_{IN} pin of another LTC4556 or LTC1955. Rather than sending one 8-bit byte before asserting $\overline{LD}$, the microcontroller should send one 8-bit byte per device. $\overline{LD}$ should only be asserted after all devices have been updated. Figure 7 shows an LTC4556 cascaded in daisy chain fashion with two LTC1955s. In this case the microcontroller would write five 8-bit bytes before asserting the $\overline{LD}$ pin.

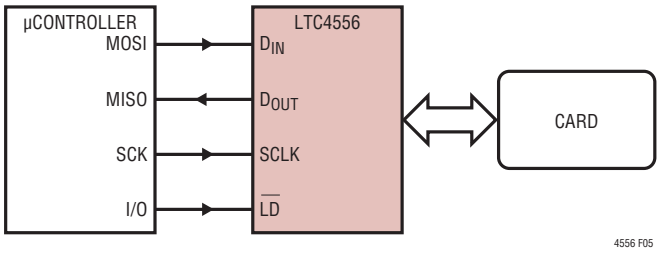

Figure 5. Microcontroller Interface

APPLICATIONS INFORMATION

Asynchronous Card Detection

Since the shift register is transparent when $\overline{LD}$ is held low, D_{OUT} is the same as D7. Recall from Table 1 that D7 indicates the status of the card detection channel. Thus it is not necessary to perform an entire read/write operation to determine the card detection status. With $\overline{LD}$ low, D_{OUT} can be used to generate a real time card detection interrupt.

Using the $\overline{UNDERV}$ Pin

The $\overline{UNDERV}$ pin can be used to add protection against a supply undervoltage fault. By using two external programming resistors, the undervoltage detection can be set to an arbitrary level (Figure 8). To ensure that the smart card is properly shut down, there must be sufficient energy available in the input bypass capacitor to run it until the deactivation cycle begins. It can take approximately 30µs from the detection of a fault until the deactivation sequence begins. It is desirable to maintain the V_{BATT} supply at 2.7V or greater during this period.

Consider the following (worst-case) example:

1) The $\overline{UNDERV}$ pin is programmed to trip below 3.1V.

2) It is possible to have the card activated at 5V and drawing 60mA.

Since the output voltage is programmed to 5V, the charge pump will be acting as a voltage doubler. With the card drawing 60mA, the input current will be 2 • (60mA) or about 120mA. Allowing the V_{BATT} supply to droop from 3.1V to 2.7V during the 30us timeout period the input capacitance would need to be at least 120mA/[(3.1V – 2.7V)/30µs] or 9µF.

Zero Shutdown Current

Although the LTC4556 is designed to have very low shutdown current it can still draw over a microampere on both DV_{CC} and V_{BATT} when in shutdown. For applications that require virtually zero shutdown current, the DV_{CC} pin can be grounded. This will reduce the V_{BATT} current to well under a single microampere. Internal logic ensures that the LTC4556 is in shutdown when DV_{CC} is grounded. Note, however, that all of the logic signals that are referenced to DV_{CC} (D_{IN}, SCLK, $\overline{LD}$, DATA, R_{IN}, SYNC and ASYNC) will have to be at 0V as well to prevent ESD diodes to DV_{CC} from being forward biased.

Operation at Higher Supplies

If a 5.5V to 6V supply voltage is available, it is possible to achieve some power savings by overriding the charge pump. The higher supply can be connected directly to the CPO pin. As long as the voltage on CPO is higher than that at which it ordinarily regulates (5.35V or 3.7V depending on voltage selections) the charge pump's oscillator will not run. This configuration can give considerable power savings since the charge pump is not being used.

APPLICATIONS INFORMATION

A voltage source is still needed on both DV_{CC} and V_{BATT} in this configuration. Recall that DV_{CC} sets the logic reference level for all the control and smart card communication pins. The voltage on V_{BATT} can be any convenient level that meets the parameters in the Electrical Characteristics table.

The 5.5V to 6V supply can be left permanently connected to CPO but there will be approximately 5µA of current flow into CPO when the LTC4556 is in shutdown.

Charge Pump Strength

Under low V_{BATT} conditions, the amount of current available to the smart card is limited by the charge pump.

Figure 6 shows how the LTC4556 can be modeled as a Thevenin equivalent circuit to determine the amount of current available given the effective input voltage, $2V_{BATT}$ and the effective open-loop output resistance, R_{OLCP}.

From Figure 6, the available current is given by:

$$I_{CC} \leq \frac{2V_{BATT} - V_{CPO}}{R_{OLCP}}$$

R_{OLCP} is dependent on a number of factors including the switching term, $1/(f_{OSC} \bullet C_{FLY})$, internal switch resistances and the nonoverlap period of the switching circuit. However, for a given R_{OLCP}, the minimum CPO voltage can be determined from the following expression:

$$V_{CPO} \geq 2V_{BATT} - (I_{CC})R_{OLCP}$$

The LDO has been designed to meet all applicable smart card standards for V_{CC} with V_{CPO} as low as 5.13V. Given this information, trade-offs can be made by the user with regard to total consumption (I_{CC}) and minimum supply voltage.

Changing the Smart Card Supply Voltage

Although the LTC4556 control system will allow the smart card voltage to be changed from one value to the next without an interim power down, this is not recommended. When changing from a higher voltage to a lower voltage there will generally not be a problem; however, changing from a lower voltage to a higher voltage can result in both an undervoltage condition or an overcurrent condition. The likely result is that the LTC4556 will automatically deactivate. Applicable smart card standards specify that the smart card supply be powered to zero before applying a new voltage.

Compliance Testing

Inductance due to long leads on type approval equipment can cause ringing and overshooot that leads to testing problems. Small amounts of capacitance and damping resistors can be included in the application without compromising the normal electrical performance of the LTC4556 or smart card system. Generally a 100Ω resistor and a 20pF capacitor will accomplish this as shown in Figure 9.

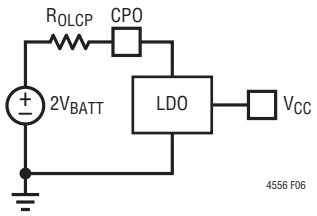

Figure 6. Equivalent Open-Loop Circuit

APPLICATIONS INFORMATION

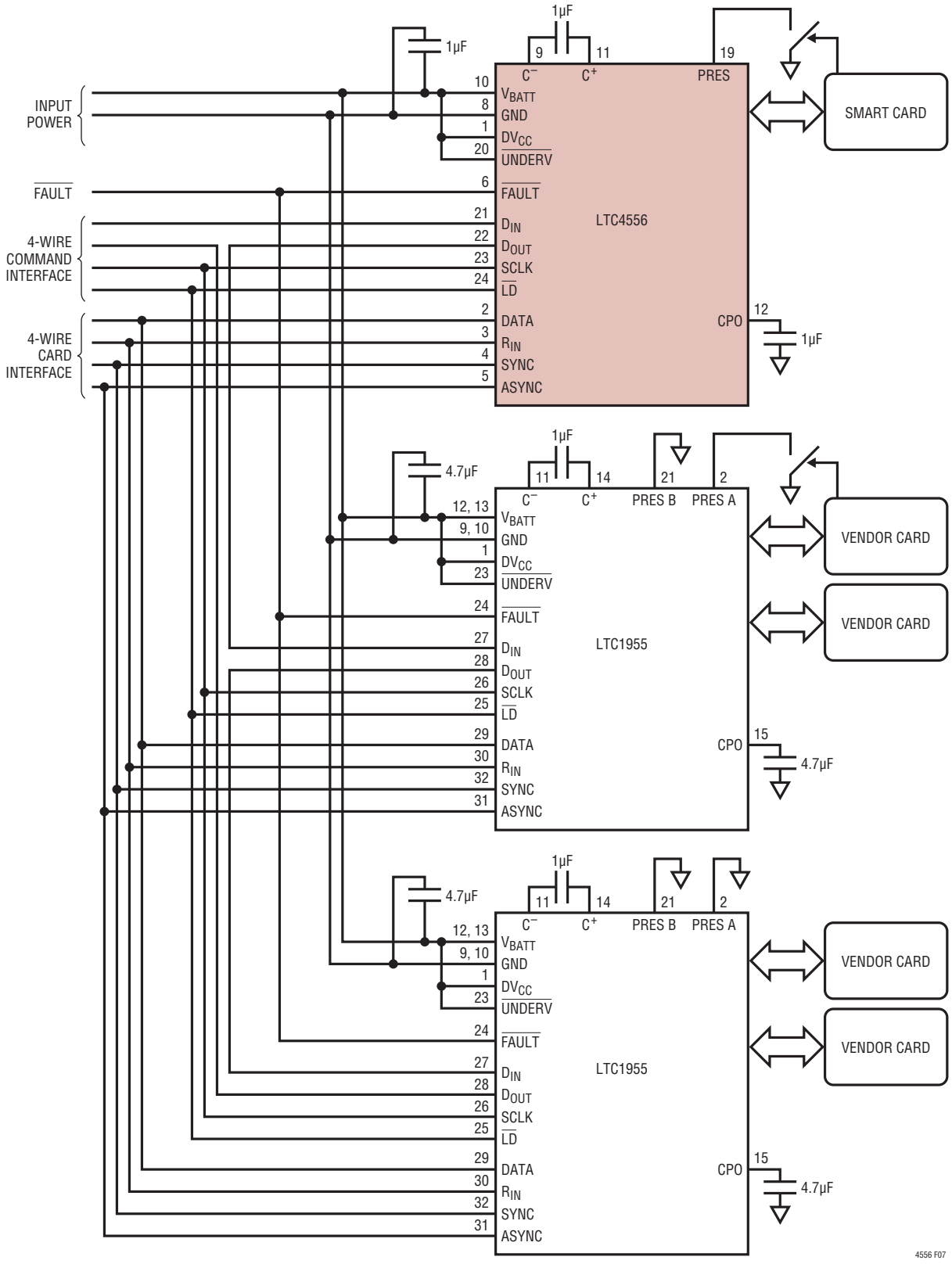

Figure 7. An LTC4556 and Two LTC1955s Daisy Chained Together

APPLICATIONS INFORMATION

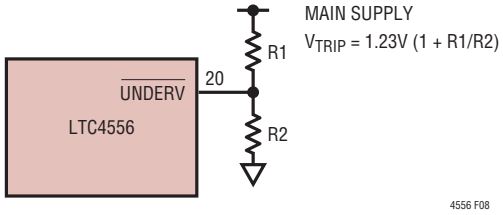

Figure 8. Setting the Undervoltage Trip Point

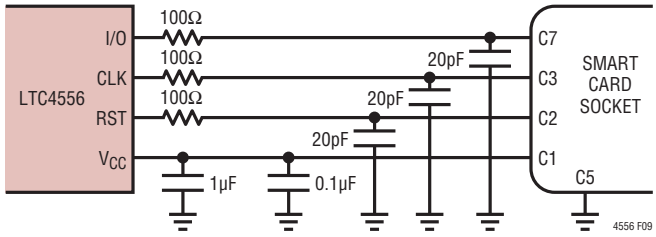

Fiugre 9. Additional Components for Improved Compliance Testing

PACKAGE DESCRIPTION

Please refer to http://www.linear.com/designtools/packaging/ for the most recent package drawings.

UF Package
24-Lead Plastic QFN (4mm × 4mm)
(Reference LTC DWG # 05-08-1697 Rev B)

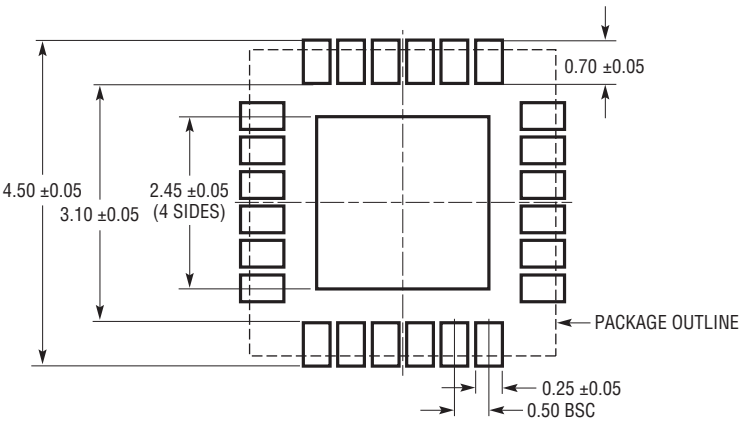

RECOMMENDED SOLDER PAD PITCH AND DIMENSIONS

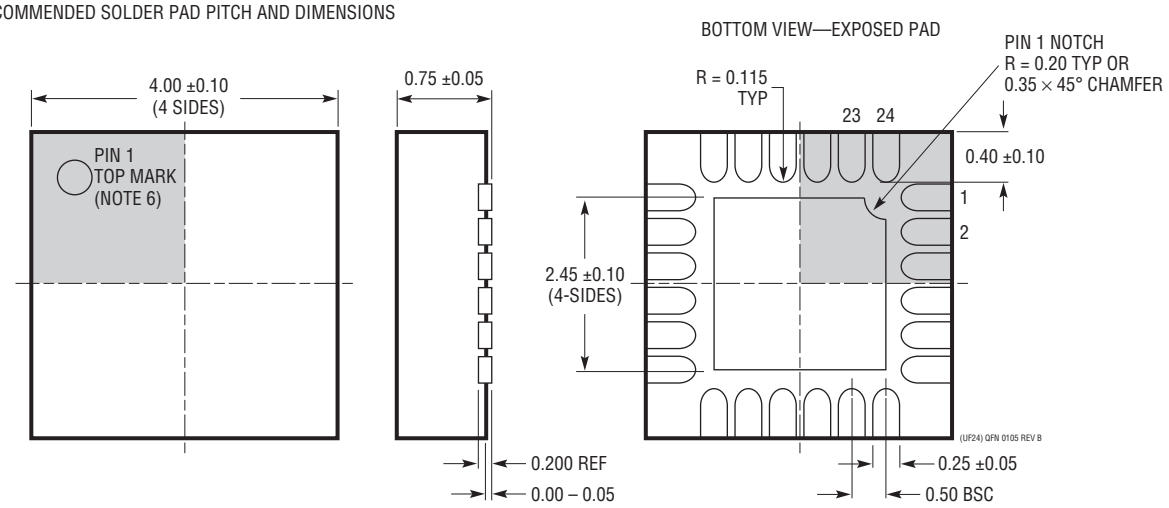

NOTE:
1. DRAWING PROPOSED TO BE MADE A JEDEC PACKAGE OUTLINE MO-220 VARIATION (WGGD-X)—TO BE APPROVED
2. DRAWING NOT TO SCALE
3. ALL DIMENSIONS ARE IN MILLIMETERS
4. DIMENSIONS OF EXPOSED PAD ON BOTTOM OF PACKAGE DO NOT INCLUDE MOLD FLASH. MOLD FLASH, IF PRESENT, SHALL NOT EXCEED 0.15mm ON ANY SIDE, IF PRESENT
5. EXPOSED PAD SHALL BE SOLDER PLATED
6. SHADED AREA IS ONLY A REFERENCE FOR PIN 1 LOCATION ON THE TOP AND BOTTOM OF PACKAGE

REVISION HISTORY

REV	DATE	DESCRIPTION	PAGE NUMBER
A	11/13	Remove t_{LW} spec from Serial Port Timing	4
		Revised Serial Port Timing section and diagram	9
B	2/14	Added t_{LFC} parameter to Serial Port Timing electrical parameters.	4
		Modified Figure 2.	9

LINEAR TECHNOLOGY

Information furnished by Linear Technology Corporation is believed to be accurate and reliable. However, no responsibility is assumed for its use. Linear Technology Corporation makes no representation that the interconnection of its circuits as described herein will not infringe on existing patent rights.

TYPICAL APPLICATION

Battery-Powered RS232 to Smart Card Interface

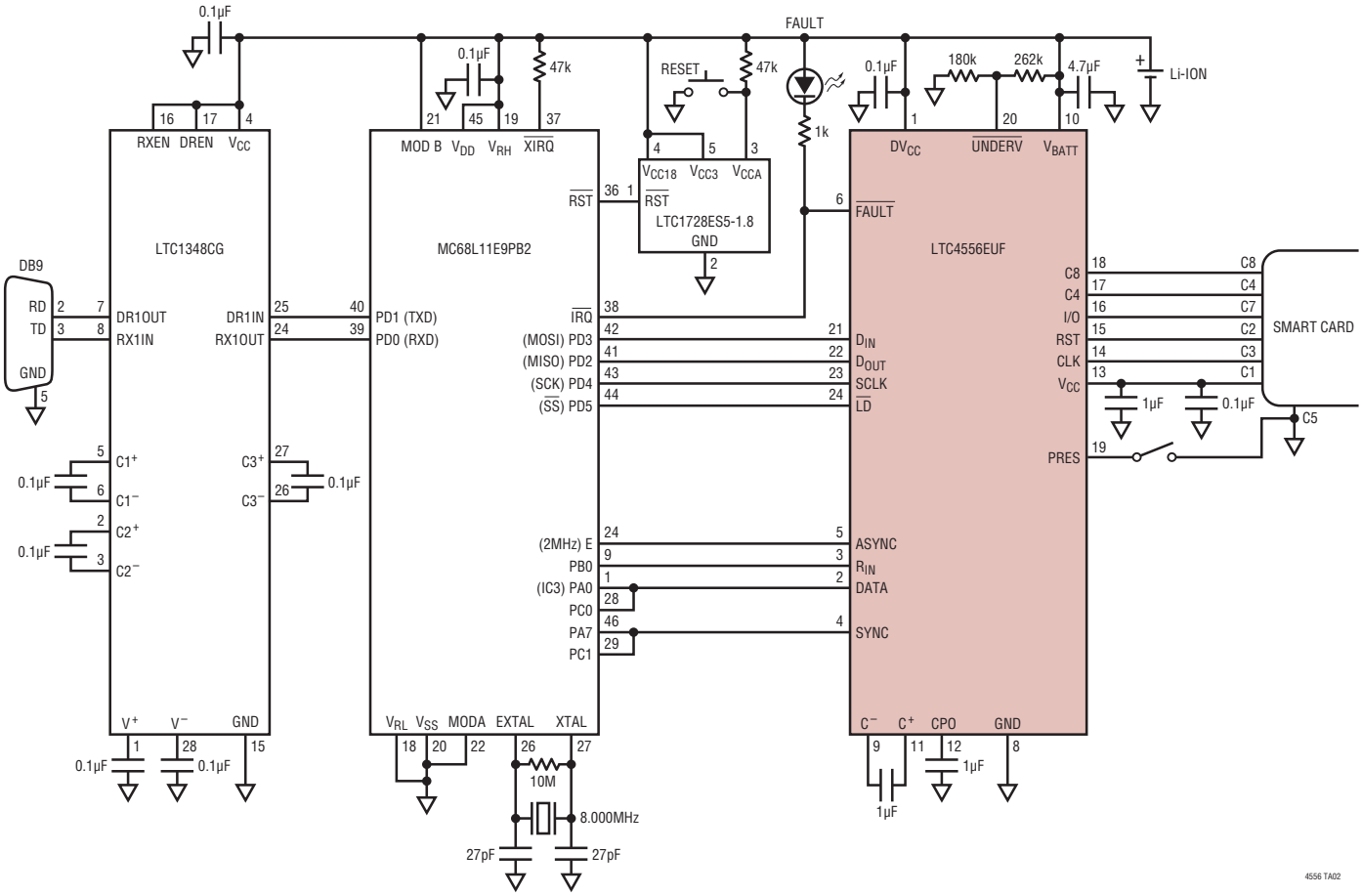

RELATED PARTS

PART NUMBER	DESCRIPTION	COMMENTS
LTC1555L/LTC1555L-1.8	1MHz, SIM Power Supply and Level Translator for 1.8V/3V/5V SIM Cards	V_{IN}: 2.6V to 6.6V, V_{OUT} = 1.8V/3V/5V, I_Q = 32µA, I_{SD} < 1µA, SSOP16
LTC1555/LTC1556	650kHz, SIM Power Supply and Level Translator for 3V/5V SIM Cards	V_{IN}: 2.7V to 10V, V_{OUT} = 3V/5V, I_Q = 60µA, I_{SD} < 1µA, SSOP16, SSOP20
LTC1755/LTC1756	850kHz, Smart Card Interface with Serial Control for 3V/5V Smart Card Applications	V_{IN}: 2.7V to 7V, V_{OUT} = 3V/5V, I_Q = 60µA, I_{SD} < 1µA, SSOP16, SSOP24
LTC1955	Dual Smart Card Interface with Serial Control for 1.8V/3V/5V Smart Card Applications	V_{IN}: 3V to 5.5V, V_{OUT} = 1.8V/3V/5V, I_Q = 200µA, I_{SD} < 1µA, QFN32
LTC1986	900kHz, SIM Power Supply for 3V/5V SIM Cards	V_{IN}: 2.6V to 4.4V, V_{OUT} = 3V/5V, I_Q = 14µA, I_{SD} < 1µA, ThinSOT™
LTC4555	SIM Power Supply and Level Translator for 1.8V/3V SIM Cards	V_{IN}: 3V to 6V, V_{OUT} = 1.8V/3V, I_Q = 40µA, I_{SD} < 1µA, QFN16
LTC4557	Dual SIM/Smart Card Power Supply and Level Translator for 1.8V/3V Cards	V_{IN}: 2.7V to 5.5V, V_{OUT} = 1.8V/3V, I_Q = 250µA, I_{SD} < 1µA, QFN16

Linear Technology Corporation
1630 McCarthy Blvd., Milpitas, CA 95035-7417
(408) 432-1900 • FAX: (408) 434-0507 • www.linear.com/LTC4556
LT/TP 0214 REV B • PRINTED IN USA
© LINEAR TECHNOLOGY CORPORATION 2003