Supply Independent Hot Swappable 2-Wire Bus Buffer

FEATURES

- **Allows Bus Pull-Up Voltages Above or Below V_{CC}**
- **Bidirectional Buffer* for SDA and SCL Lines Increases Fanout**
- **Prevents SDA and SCL Corruption During Live Board Insertion and Removal from Backplane**
- **Isolates Input SDA and SCL Line from Output**
- **10kV Human Body Model ESD Protection**
- 1V Precharge On All SDA and SCL Lines
- Supports Clock Stretching, Arbitration and Synchronization
- High Impedance SDA, SCL Pins for V_{CC} = 0V
- $\overline{CS}$ Gates Connection from Input to Output
- Compatible with I²C™, I²C Fast Mode and SMBus Standards (Up to 400kHz Operation)
- Small 8-Pin MSOP and DFN (3mm × 3mm) Packages

APPLICATIONS

- Hot Board Insertion
- Servers
- Capacitance Buffer/Bus Extender
- Desktop Computers
- CompactPCI™ and ATCA Systems

DESCRIPTION

The LTC®4301 supply independent, hot swappable, 2-wire bus buffer allows I/O card insertion into a live backplane without corruption of the data and clock busses. In addition, the LTC4301 allows the V_{CC}, SDAIN and SCLIN pull-up voltage and the SDAOUT and SCLOUT pull-up voltage to be independent from each other. Control circuitry prevents the backplane from being connected to the card until a stop bit or a bus idle is present. When the connection is made, the LTC4301 provides bidirectional buffering, keeping the backplane and card capacitances isolated.

During insertion, the SDA and SCL lines are precharged to 1V to minimize bus disturbances. When driven low, the $\overline{CS}$ input pin allows the part to connect after a stop bit or bus idle occurs. Driving $\overline{CS}$ high breaks the connection between SCLIN and SCLOUT and between SDAIN and SDAOUT. The READY output pin indicates that the backplane and card sides are connected together.

The LTC4301 is offered in 8-pin DFN (3mm × 3mm) and MSOP packages.

LT, LTC and LTM are registered trademarks of Linear Technology Corporation.
All other trademarks are the property of their respective owners.
Protected by U.S. Patents including 7032051.

TYPICAL APPLICATION

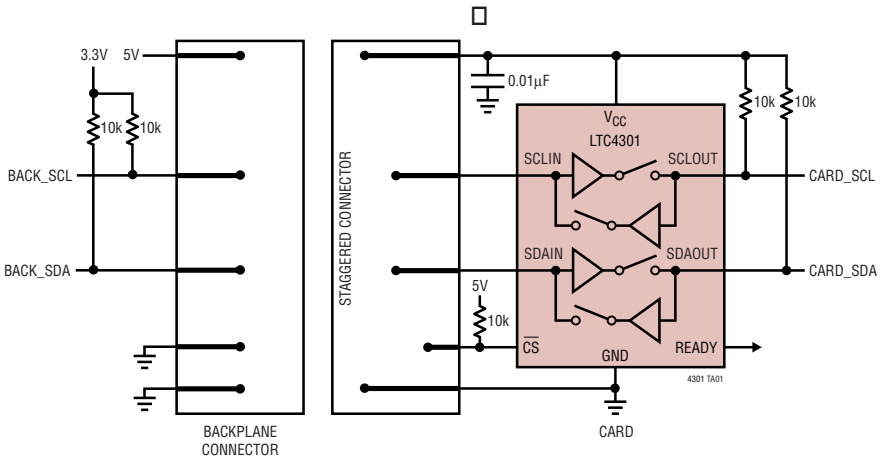

Input-Output Connection

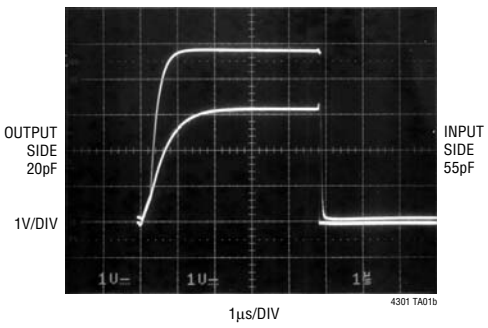

ABSOLUTE MAXIMUM RATINGS (Note 1)

V_{CC} to GND ..... –0.3V to 7V
SDAIN, SCLIN, SDAOUT, SCLOUT, $\overline{CS}$ ..... –0.3V to 7V
READY ..... –0.3V to 6V
Operating Temperature Range
LTC4301C ..... 0°C to 70°C
LTC4301I ..... –40°C to 85°C

Storage Temperature Range
MSOP ..... –65°C to 150°C
DFN ..... –65°C to 125°C
Lead Temperature (Soldering, 10 sec) ..... 300°C

PACKAGE/ORDER INFORMATION

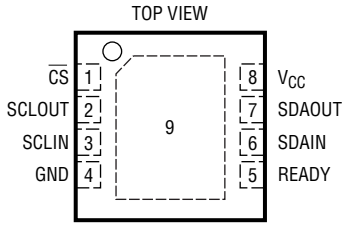

DD PACKAGE
8-LEAD (3mm × 3mm) PLASTIC DFN
T_{JMAX} = 125°C, θ_{JA} = 43°C/W
EXPOSED PAD (PIN 9)
PCB CONNECTION OPTIONAL

ORDER PART NUMBER
LTC4301CDD LTC4301IDD
DD PART MARKING*
LBBY

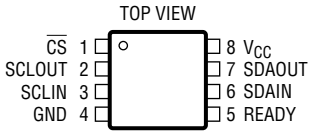

MS8 PACKAGE
8-LEAD PLASTIC MSOP
T_{JMAX} = 125°C, θ_{JA} = 200°C/W

ORDER PART NUMBER
LTC4301CMS8 LTC4301IMS8
MS8 PART MARKING*
LTBBW

Order Options Tape and Reel: Add #TR Lead Free: Add #PBF Lead Free Tape and Reel: Add #TRPBF
Lead Free Part Marking: http://www.linear.com/leadfree/

*The temperature grade is identified by a label on the shipping container. Consult LTC Marketing for parts specified with wider operating temperature ranges.

ELECTRICAL CHARACTERISTICS

The ● indicates specifications which apply over the full operating temperature range, otherwise specifications are at T_A = 25°C. V_{CC} = 2.7V to 5.5V, unless otherwise noted.

SYMBOL	PARAMETER	CONDITIONS		MIN	TYP	MAX	UNITS
Power Supply							
V_{CC}	Positive Supply Voltage		●	2.7		5.5	V
I_{CC}	Supply Current	V_{CC} = 5.5V, V_{SDAIN} = V_{SCLIN} = 0V V_{CC} = 5.5V, $\overline{CS}$ = 5.5V	●		4.5 300	6.2	mA µA
Start-Up Circuitry							
V_{PRE}	Precharge Voltage	SDA, SCL Floating	●	0.85	1.05	1.25	V
t_{IDLE}	Bus Idle Time		●	60	95	175	µs
RDY_{VOL}	READY Output Low Voltage	I_{PULLUP} = 3mA	●			0.4	V
$V_{THR\overline{CS}}$	Connection Sense Threshold			0.8	1.4	2	V
$I_{\overline{CS}}$	$\overline{CS}$ Input Current	$\overline{CS}$ from 0V to V_{CC}			±0.1	±1	µA
V_{THR}	SDA, SCL Logic Input Threshold Voltage	Rising Edge		1.55	1.8	2.0	V
V_{HYS}	SDA, SCL Logic Input Threshold Voltage Hysteresis	(Note 3)			50		mV
t_{PLH}	$\overline{CS}$ Delay On-Off READY Delay Off-On				10 10		ns ns
t_{PHL}	$\overline{CS}$ Delay Off-On READY Delay On-Off				95 10		µs ns
I_{OFF}	Ready Off Leakage Current				±0.1		µA

ELECTRICAL CHARACTERISTICS

The ● indicates specifications which apply over the full operating temperature range, otherwise specifications are at T_A = 25°C. V_{CC} = 2.7V to 5.5V, unless otherwise noted.

SYMBOL	PARAMETER	CONDITIONS		MIN	TYP	MAX	UNITS
Input-Output Connection							
V_{OS}	Input-Output Offset Voltage	10k to V_{CC} on SDA, SCL, V_{CC} = 3.3V, SDA or SCL = 0.2V (Note 2)	●	0	100	175	mV
C_{IN}	Digital Input Capacitance SDAIN, SDAOUT, SCLIN, SCLOUT	(Note 3)				10	pF
I_{LEAK}	Input Leakage Current	SDA, SCL Pins				±5	µA
V_{OL}	Output Low Voltage, Input = 0V	SDA, SCL Pins, I_{SINK} = 3mA, V_{CC} = 2.7V	●	0		0.4	V
Timing Characteristics							
$f_{I2C,MAX}$	I^2C Maximum Operating Frequency	(Note 3)		400	600		kHz
t_{BUF}	Bus Free Time Between Stop and Start Condition	(Note 3)				1.3	µs
$t_{HD,STA}$	Hold Time After (Repeated) Start Condition	(Note 3)				100	ns
$t_{SU,STA}$	Repeated Start Condition Set-Up Time	(Note 3)				0	ns
$t_{SU,STO}$	Stop Condition Set-Up Time	(Note 3)				0	ns
$t_{HD,DATI}$	Data Hold Time Input	(Note 3)				0	ns
$t_{SU,DAT}$	Data Set-Up Time	(Note 3)				100	ns

Note 1: Stresses beyond those listed under Absolute Maximum Ratings may cause permanent damage to the device. Exposure to any Absolute Maximum Rating condition for extended periods may affect device reliability and lifetime.

Note 2: The connection circuitry always regulates its output to a higher voltage than its input. The magnitude of this offset voltage as a function of the pull-up resistor and V_{CC} voltage is shown in the Typical Performance Characteristics section.

Note 3: Determined by design, not tested in production.

TYPICAL PERFORMANCE CHARACTERISTICS

I_{CC} vs Temperature

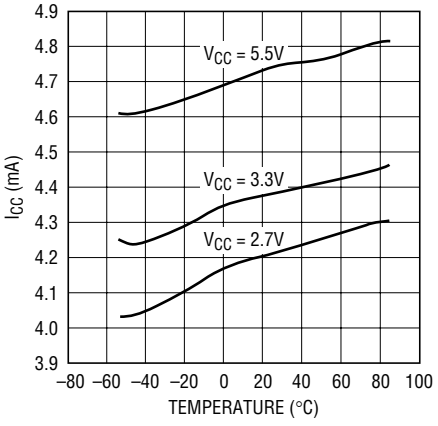

Input – Output High to Low Propagation Delay vs Temperature

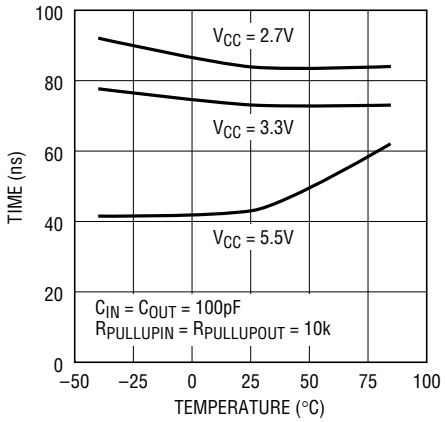

Connection Circuitry $V_{OUT} – V_{IN}$

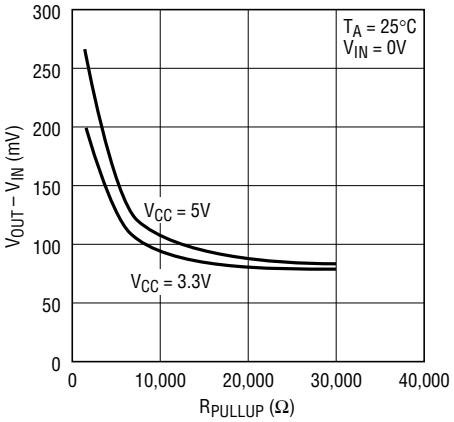

PIN FUNCTIONS

$\overline{CS}$ (Pin 1): The connection sense pin is a 1.4V threshold digital input pin. For normal operation $\overline{CS}$ is grounded. Driving $\overline{CS}$ above the 1.4V threshold isolates SDAIN from SDAOUT and SCLIN from SCLOUT and asserts READY low.

SCLOUT (Pin 2): Serial Clock Output. Connect this pin to the SCL bus on the card.

SCLIN (Pin 3): Serial Clock Input. Connect this pin to SCL on the bus backplane.

GND (Pin 4): Ground. Connect this pin to a ground plane for best results.

READY (Pin 5): The READY pin is an open drain N-channel MOSFET output which pulls down when $\overline{CS}$ is high or when the start-up sequence described in the Operation section has not been completed. READY goes high when $\overline{CS}$ is low and a start-up is complete.

SDAIN (Pin 6): Serial Data Input. Connect this pin to the SDA bus on the backplane.

SDAOUT (Pin 7): Serial Data Output. Connect this pin to the SDA bus on the card.

V_{CC} (Pin 8): Main Input Supply. Place a bypass capacitor of at least 0.01µF close to V_{CC} for best results.

Exposed Pad (Pin 9): Exposed pad may be left open or connected to device ground.

BLOCK DIAGRAM

LTC4301 Supply Independent 2-Wire Bus Buffer

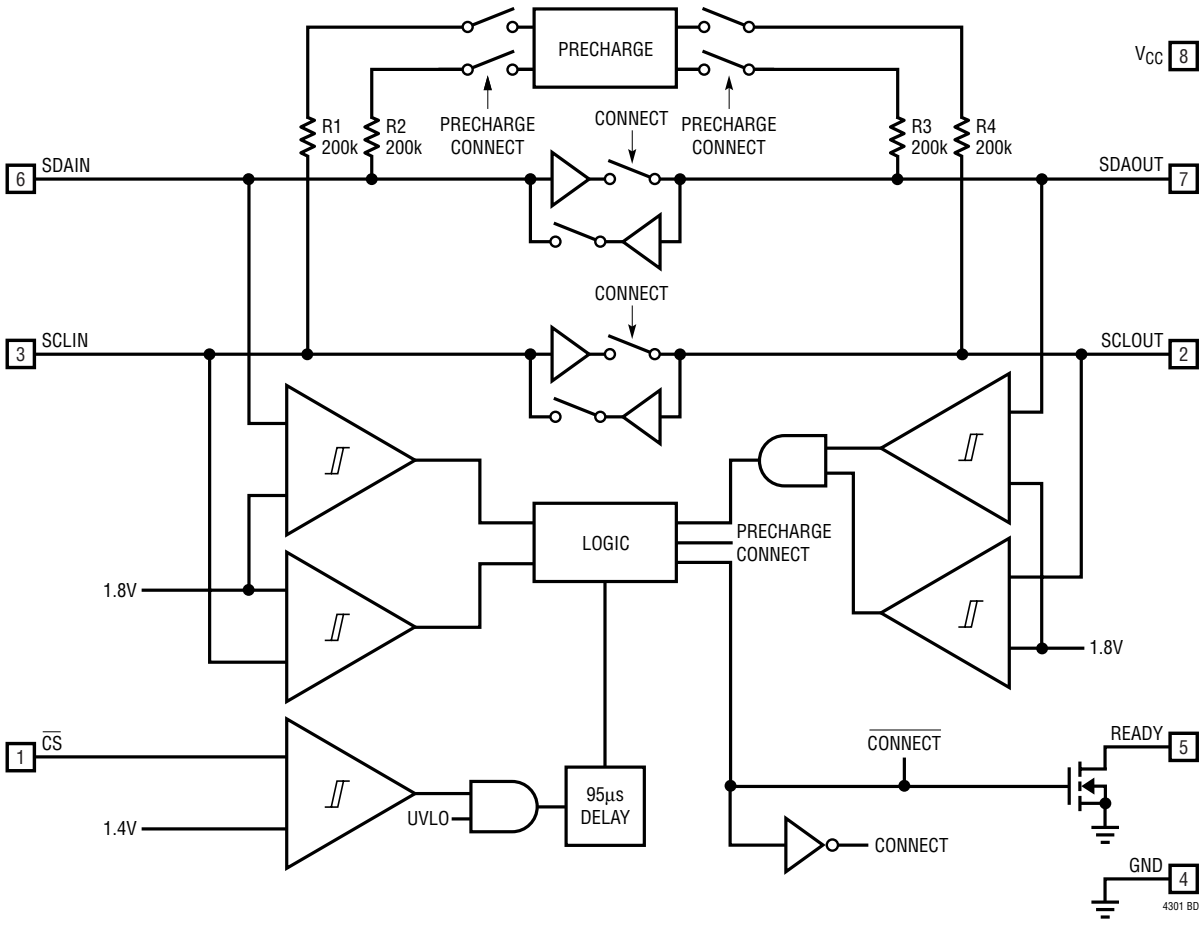

OPERATION

Start-Up

When the LTC4301 first receives power on its V_{CC} pin, either during power-up or live insertion, it starts in an undervoltage lockout (UVLO) state, ignoring any activity on the SDA or SCL pins until V_{CC} rises above 2.5V (typical). This is to ensure that the part does not try to function until it has enough voltage to do so.

During this time, the 1V precharge circuitry is active and forces 1V through 200k nominal resistors to the SDA and SCL pins. Because the I/O card is being plugged into a live backplane, the voltage on the backplane SDA and SCL busses may be anywhere between 0V and V_{CC}. Precharging the SCL and SDA pins to 1V minimizes the worst-case voltage differential these pins will see at the moment of connection, therefore minimizing the amount of disturbance caused by the I/O card.

Once the LTC4301 comes out of UVLO, it assumes that SDAIN and SCLIN have been inserted into a live system and that SDAOUT and SCLOUT are being powered up at the same time as itself. Therefore, it looks for either a stop bit or bus idle condition on the backplane side to indicate the completion of a data transaction. When either one occurs, the part also verifies that both the SDAOUT and SCLOUT voltages are high. When all of these conditions are met, the input-to-output connection circuitry is activated, joining the SDA and SCL busses on the I/O card with those on the backplane.

Connection Circuitry

Once the connection circuitry is activated, the functionality of the SDAIN and SDAOUT pins is identical. A low forced on either pin at any time results in both pin voltages being low. For proper operation, logic low input voltages should be no higher than 0.4V with respect to the ground pin voltage of the LTC4301. SDAIN and SDAOUT enter a logic high state only when all devices on both SDAIN and SDAOUT release high. The same is true for SCLIN and SCLOUT. This important feature ensures that clock stretching, clock synchronization, arbitration and the acknowledge protocol always work, regardless of how the devices in the system are tied to the LTC4301.

Another key feature of the connection circuitry is that it provides bidirectional buffering, keeping the backplane and card capacitances isolated. Because of this isolation, the waveforms on the backplane busses look slightly different than the corresponding card bus waveforms as described here.

Input-to-Output Offset Voltage

When a logic low voltage, V_{LOW1}, is driven on any of the LTC4301's data or clock pins, the LTC4301 regulates the voltage on the other side of the device (call it V_{LOW2}) at a slightly higher voltage, as directed by the following equation:

$$V_{LOW2} = V_{LOW1} + 75mV + (V_{CC}/R) \bullet 70\Omega \text{ (typical)}$$

where R is the bus pull-up resistance in ohms. For example, if a device is forcing SDAOUT to 10mV where V_{CC} = 3.3V and the pull-up resistor R on SDAIN is 10k, then the voltage on SDAIN = 10mV + 75mV + (3.3/10000) • 70 = 108mV (typical). See the Typical Performance Characteristics section for curves showing the offset voltage as a function of V_{CC} and R.

Propagation Delays

During a rising edge, the rise time on each side is determined by the bus pull-up resistor and the equivalent capacitance on the line. If the pull-up resistors are the same, a difference in rise time occurs which is directly proportional to the difference in capacitance between the two sides. This effect is displayed in Figure 1 for V_{CC} = 5V and a 10k pull-up resistor on each side (55pF on one side and 20pF on the other). SDAIN and SCLIN are pulled-up to 3.3V, and SDAOUT and SCLOUT are pulled-up to 5V. Since the output side has less capacitance than the input, it rises faster and the effective low to high propagation delay is negative.

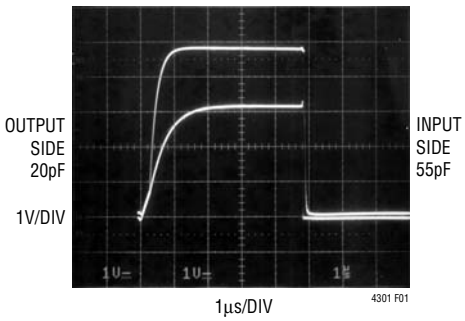

Figure 1. Input-Output Connection

OPERATION

There is a finite high to low propagation delay through the connection circuitry for falling waveforms. Figure 2 shows the falling edge waveforms for the same pull-up resistors and equivalent capacitance conditions as used in Figure 1. An external N-channel MOSFET device pulls down the voltage on the side with 55pF capacitance; LTC4301 pulls down the voltage on the opposite side with a delay of 60ns. This delay is always positive and is a function of supply voltage, temperature and the pull-up resistors and equivalent bus capacitances on both sides of the bus. The Typical Performance Characteristics section shows high to low propagation delay as a function of temperature and voltage for 10k pull-up resistors pulled-up to V_{CC} and 100pF equivalent capacitance on both sides of the part. Larger output capacitances translate to longer delays (up to 150ns). Users must quantify the difference in propagation times for a rising edge versus a falling edge in their systems and adjust setup and hold times accordingly.

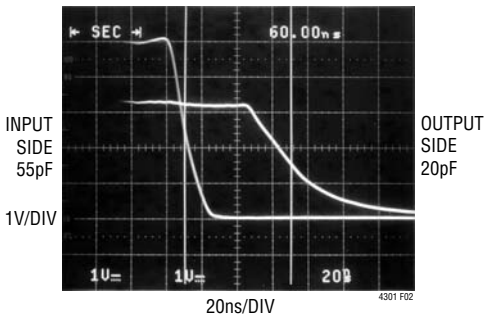

Figure 2. Input-Output Connection High to Low Propagation Delay

Ready Digital Output

This pin provides a digital flag which is low when either $\overline{CS}$ is high or the start-up sequence described earlier in this section has not been completed. READY goes high when $\overline{CS}$ is low and start-up is complete. The pin is driven by an open-drain pull-down capable of sinking 3mA while holding 0.4V on the pin. Connect a resistor of 10k to V_{CC} to provide the pull-up.

Connection Sense

When the $\overline{CS}$ pin is driven above 1.4V with respect to the LTC4301's ground, the backplane side is disconnected from the card side and the READY pin is internally pulled low. When the pin voltage is low, the part waits for data transactions on both the backplane and card sides to be complete (as described in the Start-Up section) before reconnecting the two sides. At this time the internal pulldown on READY releases.

APPLICATIONS INFORMATION

Live Insertion and Capacitance Buffering Application

Figures 3 illustrates applications of the LTC4301 with different bus pull-up and V_{CC} voltages, demonstrating its ability to recognize and buffer bus data levels that are above or below its V_{CC} supply. All of these applications take advantage of the LTC4301's Hot Swap™ controlling, capacitance buffering and precharge features. If the I/O cards were plugged directly into the backplane without the LTC4301 buffer, all of the backplane and card capacitances would add directly together, making rise- and fall-time requirements difficult to meet. Placing an LTC4301 on the edge of each card, however, isolates the card capacitance from the backplane. For a given I/O card, the LTC4301 drives the capacitance of everything on the card and the backplane must drive only the capacitance of the LTC4301, which is less than 10pF.

In most applications the LTC4301 will be used with a staggered connector where V_{CC} and GND will be long pins. SDA and SCL are medium length pins to ensure that the V_{CC} and GND pins make contact first. This will allow the precharge circuitry to be activated on SDA and SCL before

Hot Swap is a trademark of Linear Technology Corporation.

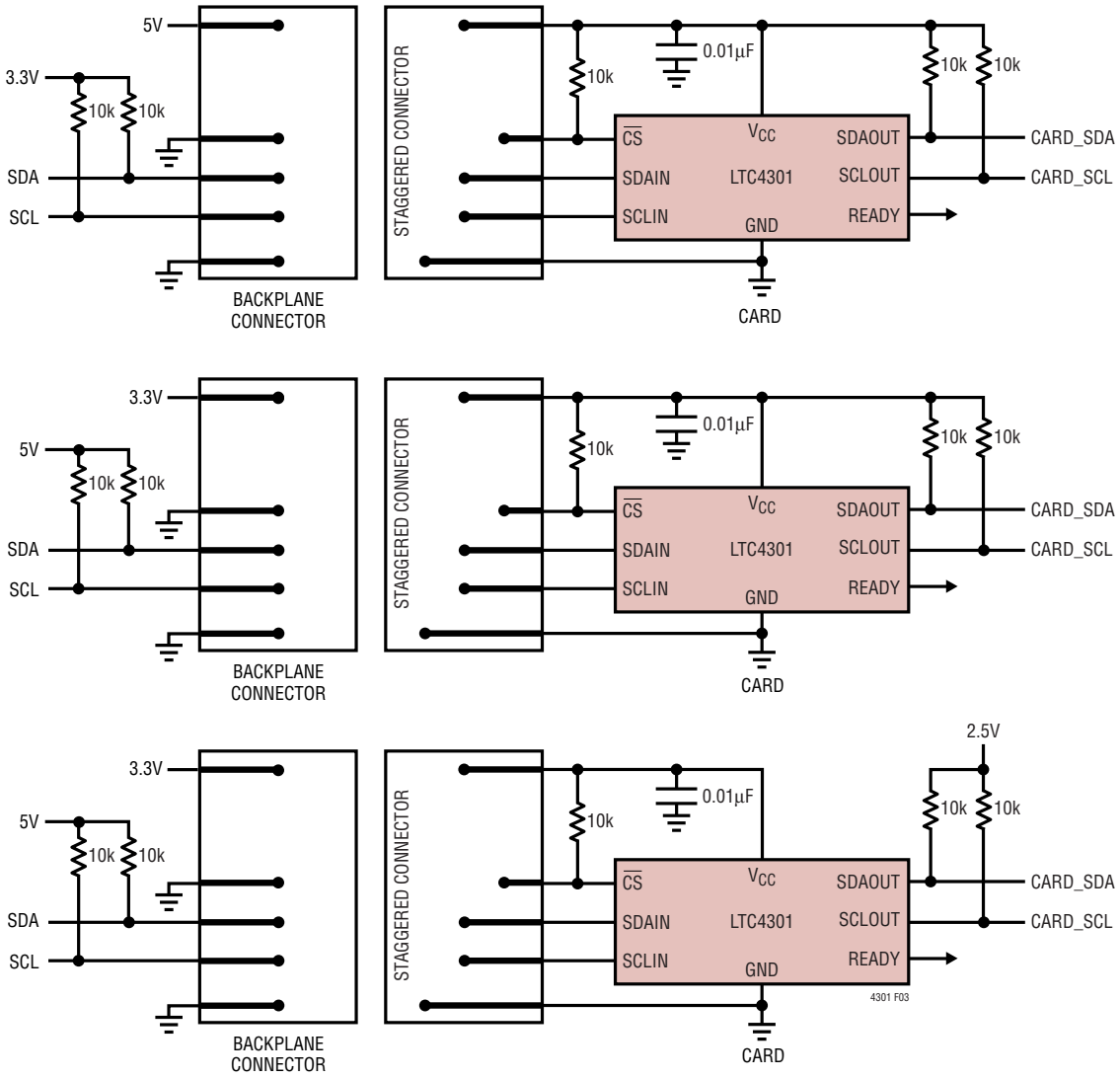

Figure 3. Typical Supply Independent Applications

APPLICATIONS INFORMATION

they make contact. $\overline{CS}$ is a short pin that is pulled up when not connected. This is to ensure that the connection between the backplane and the cards data and clock busses is not enabled until the transients associated with live insertion have settled.

Figure 4 shows the LTC4301 in a CompactPCI™ configuration. The LTC4301 receives its V_{CC} voltage from one of the long "early power" pins. Because this power is not switched, add a 5Ω to 10Ω resistor between V_{CC} of the LTC4301 and the connector V_{CC} pin. Establishing early power V_{CC} ensures that the 1V precharge voltage is present at SDAIN and SCLIN before they make contact. The $\overline{CS}$ pin is driven by the CompactPCI's BD_SEL# pin using a short pin. This is to ensure that a connection is not enabled until the transients associated with live insertion have settled.

Figure 5 shows the LTC4301 in a PCI application where all of the pins have the same length. In this case, an RC filter circuit on the I/O card with a product of 10ms provides a

CompactPCI is a trademark of the PCI Industrial Computer Manufacturers Group.

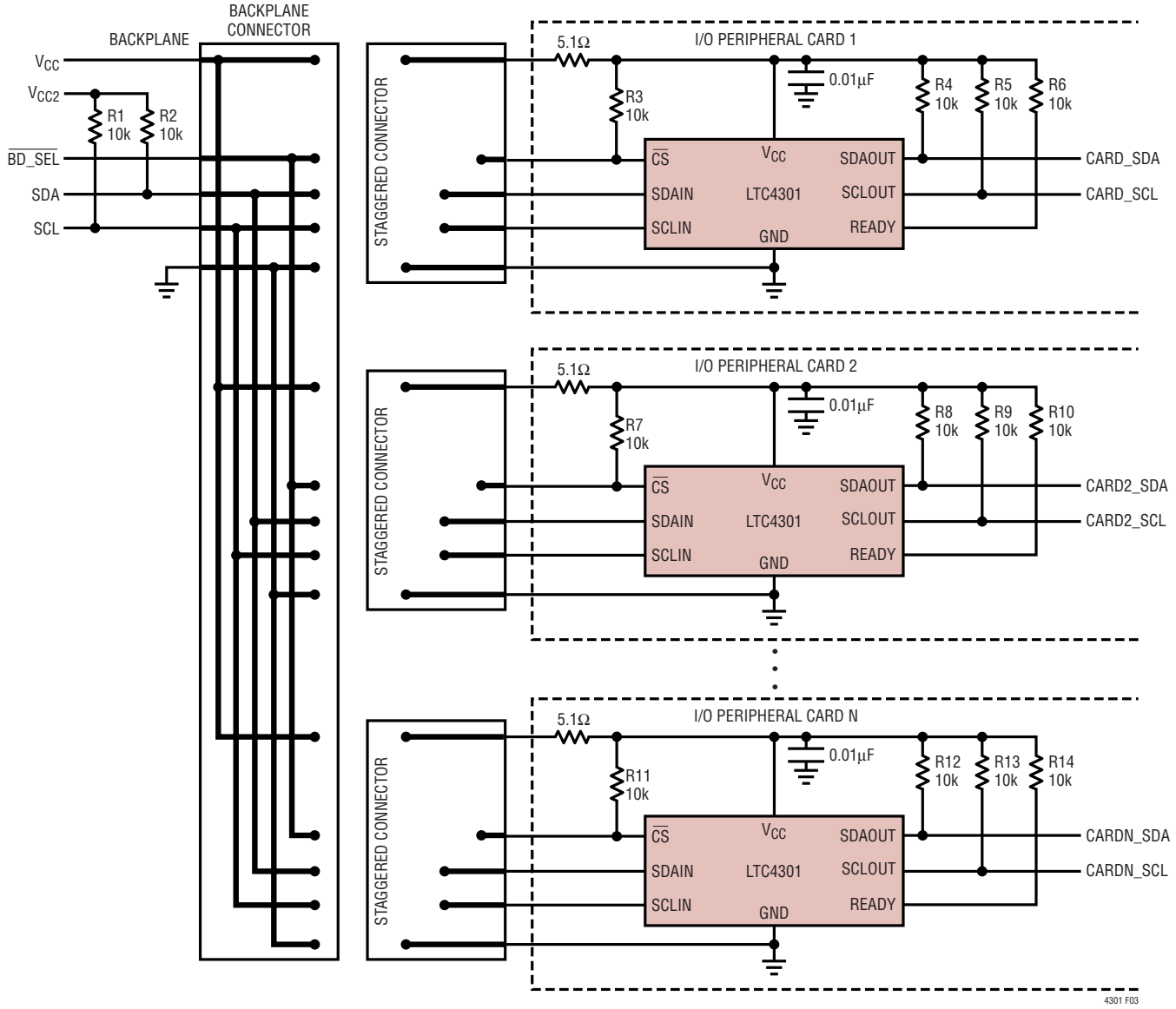

Figure 4. Inserting Multiple I/O Cards into a Live Backplane Using the LTC4301 in a CompactPCI System

APPLICATIONS INFORMATION

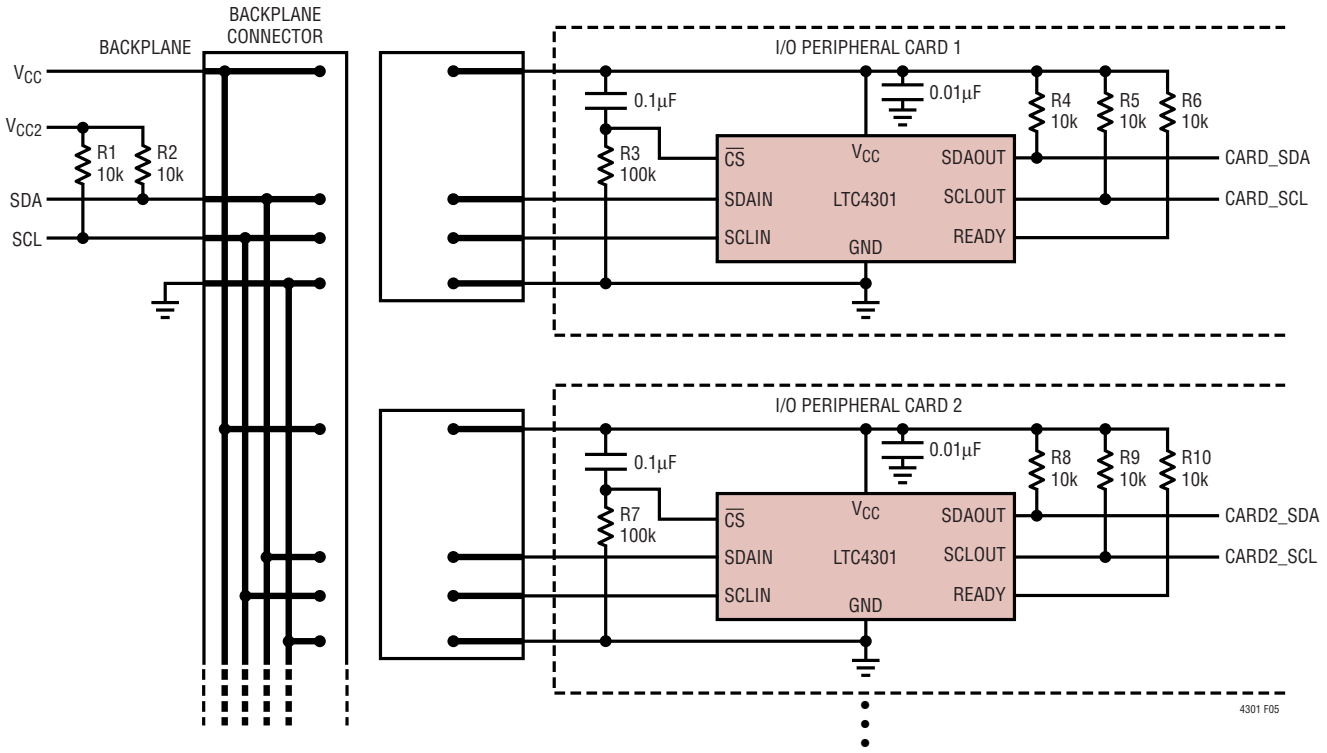

Figure 5. Inserting Multiple I/O Cards into a Live Backplane Using the LTC4301 in a PCI System

filter to prevent the LTC4301 from becoming activated until the transients associated with live insertion have settled. Connect the capacitor between V_{CC} and $\overline{CS}$, and the resistor from $\overline{CS}$ to GND.

Repeater/Bus Extender Application

Users who wish to connect two 2-wire systems separated by a distance can do so by connecting two LTC4301s back-to-back as shown in Figure 6. The I^2C specification allows for 400pF maximum bus capacitance, severely limiting the length of the bus. The SMBus specification places no restriction on bus capacitance, but the limited impedances of devices connected to the bus require systems to remain small if rise- and fall-time specifications are to be met. Using the LTC4301 allows the capacitance to be isolated into smaller sections, enabling the system to meet rise- and fall-time requirements. In this situation, the differential ground voltage between the two systems may limit the allowed distance, because valid logic low voltage with respect to the ground at one end of the system may violate the allowed V_{OL} specification with respect to the ground at the other end. In addition, the connection circuitry offset voltages of the back-to-back LTC4301s add together, directly contributing to the same problem.

Systems with Supply Voltage Droop

In large 2-wire systems, the V_{CC} voltages seen by devices at various points in the system can differ by a few hundred millivolts or more. This situation is well modelled by a series resistor in the V_{CC} line as shown in Figure 7. For proper operation, make sure that the $V_{CC(LTC4301)}$ is ≥ 2.7V.

APPLICATIONS INFORMATION

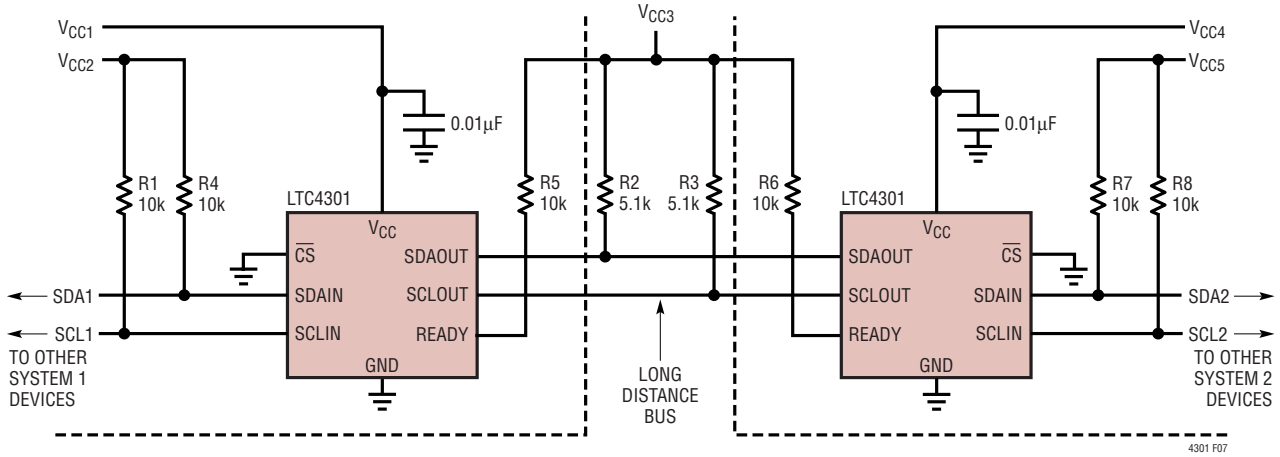

Figure 6. Repeater/Bus Extender Application

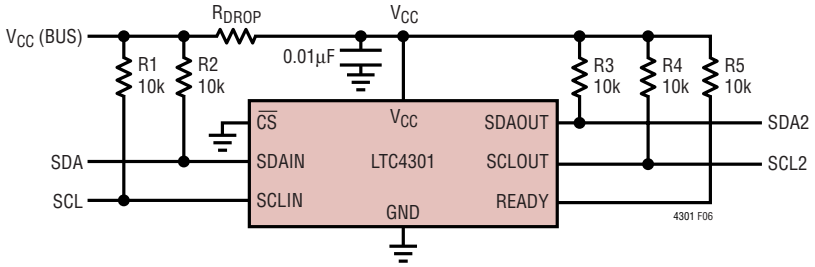

Figure 7. System with V_{CC} Voltage Droop

PACKAGE DESCRIPTION

DD Package
8-Lead Plastic DFN (3mm × 3mm)
(Reference LTC DWG # 05-08-1698)

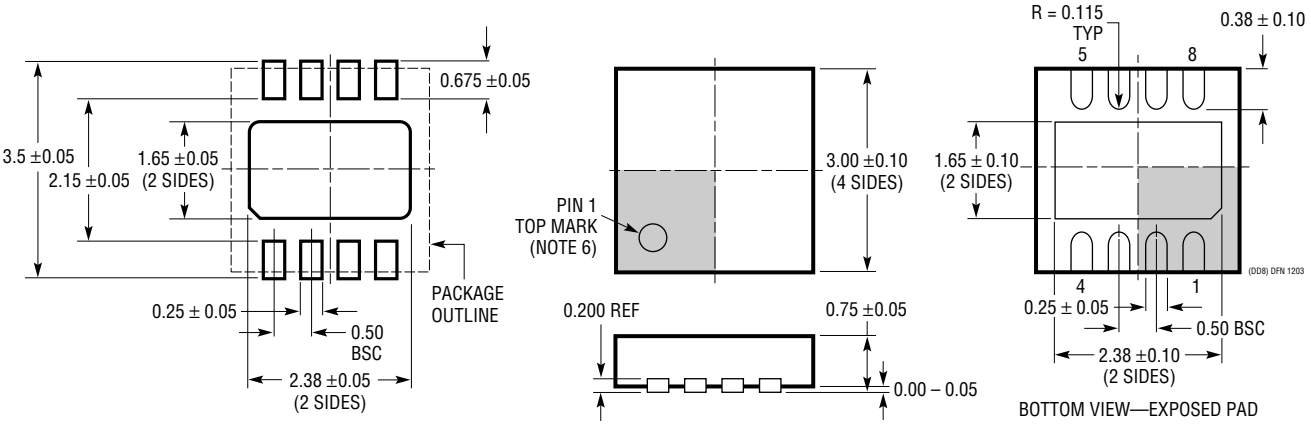

NOTE:
1. DRAWING TO BE MADE A JEDEC PACKAGE OUTLINE M0-229 VARIATION OF (WEED-1)
2. DRAWING NOT TO SCALE
3. ALL DIMENSIONS ARE IN MILLIMETERS
4. DIMENSIONS OF EXPOSED PAD ON BOTTOM OF PACKAGE DO NOT INCLUDE MOLD FLASH. MOLD FLASH, IF PRESENT, SHALL NOT EXCEED 0.15mm ON ANY SIDE
5. EXPOSED PAD SHALL BE SOLDER PLATED
6. SHADED AREA IS ONLY A REFERENCE FOR PIN 1 LOCATION ON TOP AND BOTTOM OF PACKAGE

MS8 Package
8-Lead Plastic MSOP
(Reference LTC DWG # 05-08-1660)

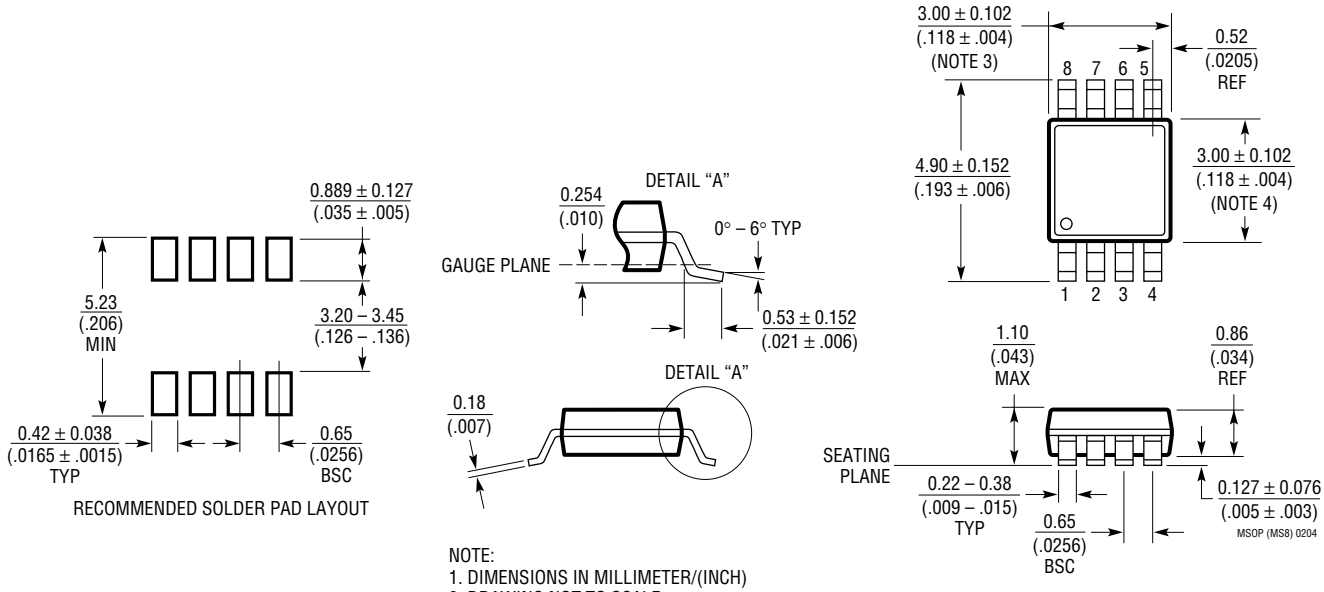

NOTE:
1. DIMENSIONS IN MILLIMETER/(INCH)
2. DRAWING NOT TO SCALE
3. DIMENSION DOES NOT INCLUDE MOLD FLASH, PROTRUSIONS OR GATE BURRS. MOLD FLASH, PROTRUSIONS OR GATE BURRS SHALL NOT EXCEED 0.152mm (.006") PER SIDE
4. DIMENSION DOES NOT INCLUDE INTERLEAD FLASH OR PROTRUSIONS. INTERLEAD FLASH OR PROTRUSIONS SHALL NOT EXCEED 0.152mm (.006") PER SIDE
5. LEAD COPLANARITY (BOTTOM OF LEADS AFTER FORMING) SHALL BE 0.102mm (.004") MAX

Information furnished by Linear Technology Corporation is believed to be accurate and reliable. However, no responsibility is assumed for its use. Linear Technology Corporation makes no representation that the interconnection of its circuits as described herein will not infringe on existing patent rights.

TYPICAL APPLICATION

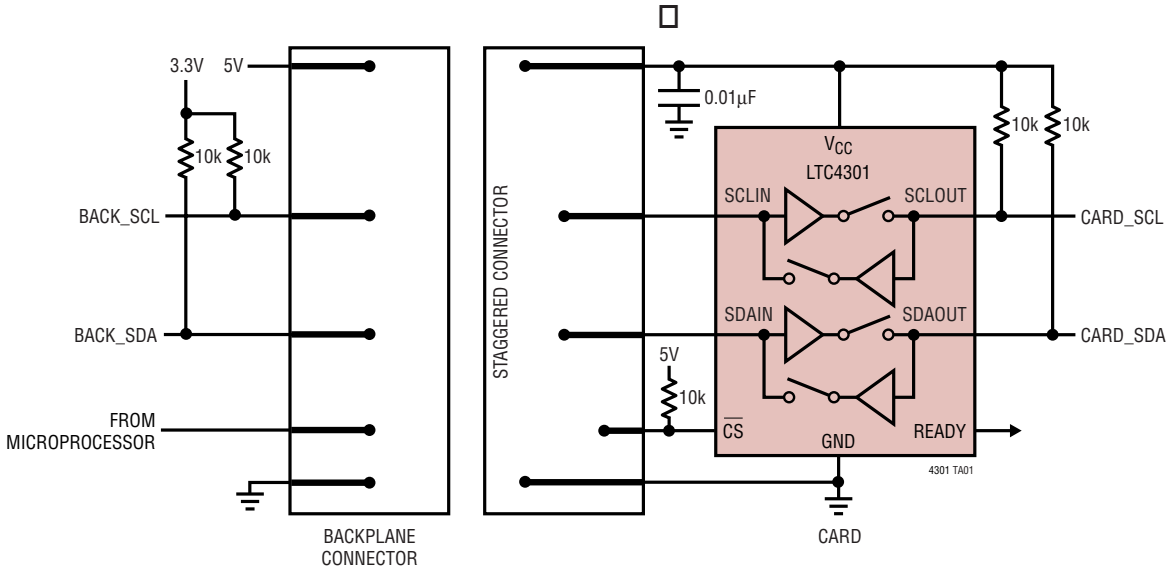

Figure 8. System with Active Connection Control

RELATED PARTS

PART NUMBER	DESCRIPTION	COMMENTS
LTC1380/LTC1393	Single-Ended 8-Channel/Differential 4-Channel Analog Mux with SMBus Interface	Low R_{ON}: 35Ω Single-Ended/70Ω Differential, Expandable to 32 Single or 16 Differential Channels
LTC1427-50	Micropower, 10-Bit Current Output DAC with SMBus Interface	Precision 50µA ± 2.5% Tolerance Over Temperature, 4 Selectable SMBus Addresses, DAC Powers up at Zero or Midscale
LTC1623	Dual High Side Switch Controller with SMBus Interface	8 Selectable Addresses/16-Channel Capability
LTC1663	SMBus Interface 10-Bit Rail-to-Rail Micropower DAC	DNL < 0.75LSB Max, 5-Lead SOT-23 Package
LTC1694/LTC1694-1	SMBus Accelerator	Improved SMBus/I²C Rise-Time, Ensures Data Integrity with Multiple SMBus/I²C Devices
LT1786F	SMBus Controlled CCFL Switching Regulator	1.25A, 200kHz, Floating or Grounded Lamp Configurations
LTC1695	SMBus/I²C Fan Speed Controller in ThinSOT™	0.75Ω PMOS 180mA Regulator, 6-Bit DAC
LTC1840	Dual I²C Fan Speed Controller	Two 100µA 8-Bit DACs, Two Tach Inputs, Four GPIO
LTC4300A-1/LTC4300A-2	Hot Swappable 2-Wire Bus Buffer	Isolates Backplane and Card Capacitances
LTC4301L	Hot Swappable 2-Wire Bus Buffer with Low Voltage Level Translation	Allows Bus Pull-Up Voltages as Low as 1V on SDAIN and SCLIN
LTC4302-1/LTC4302-2	Addressable 2-Wire Bus Buffer	Address Expansion, GPIO, Software Controlled

ThinSOT is a trademark of Linear Technology Corporation.

Linear Technology Corporation
1630 McCarthy Blvd., Milpitas, CA 95035-7417
(408) 432-1900 • FAX: (408) 434-0507 • www.linear.com

LT 0806 REV B • PRINTED IN THE USA

© LINEAR TECHNOLOGY CORPORATION 2004