12-Port PoE/PoE+/LTPoE++ PSE Controller

FEATURES

- **12 Independent PSE Channels**
- **Compliant with IEEE 802.3at Type 1 and 2**
- **Chipset Provides Electrical Isolation**
  - **Reduced BOM Cost**
  - **Eliminates up to 6 High Speed Opto-Couplers**
  - **Eliminates Isolated 3.3V Power Supply**
- **Low Power Dissipation**
  - **0.25Ω Sense Resistance Per Channel**
- **Very High Reliability 4-Point PD Detection**
  - **2-Point Forced Voltage**
  - **2-Point Forced Current**
- Temperature Monitoring
- V_{EE} and V_{PORT} Monitoring
- 1 Second Rolling I_{PORT} Averaging
- Supports 2-Pair and 4-Pair Output Power
- 1MHz I^2C Compatible Serial Control Interface
- Available In Three Power Grades
  - A-Grade – LTPoE++™ 35W to 90W
  - B-Grade – PoE+ 25.5W
  - C-Grade – PoE 13W
- Available In 52-Lead 7mm × 8mm (LTC4270) and 24-Lead 4mm × 4mm (LTC4271) QFN Packages

APPLICATIONS

- PoE PSE Switches/Routers
- PoE PSE Midspans

DESCRIPTION

The LTC®4270/LTC4271 chipset is a 12-Port Power Sourcing Equipment (PSE) controller designed for use in IEEE 802.3at Type 1 and Type 2 (high power) compliant Power over Ethernet (PoE) systems. Transformer-isolated communication protocol replaces expensive opto-couplers and complex isolated 3.3V supply resulting in significant BOM cost savings. The LTC4270/LTC4271 chipset delivers lowest-in-industry heat dissipation by utilizing low-$R_{DS(ON)}$ external MOSFETs and 0.25Ω sense resistors.

Advanced power management features include per-port 12-bit current monitoring ADCs, DAC-programmable current limit, and versatile fast shut-down of preselected ports. Advanced power management host software is available under a no-cost license. PD Discovery uses a proprietary dual-mode 4-point detection mechanism ensuring excellent immunity from false PD detection. Midspan PSEs are supported with 2-event classification and a 2 second backoff timer. The LTC4270/LTC4271 includes an I^2C serial interface operable up to 1MHz.

The LTC4270/LTC4271 is available in multiple power grades allowing delivered PD power up to 90W.

LT, LTC, LTM, Burst Mode, Linear Technology and the Linear logo are registered trademarks and LTPoE++ is a trademark of Linear Technology Corporation. All other trademarks are the property of their respective owners.

TYPICAL APPLICATION

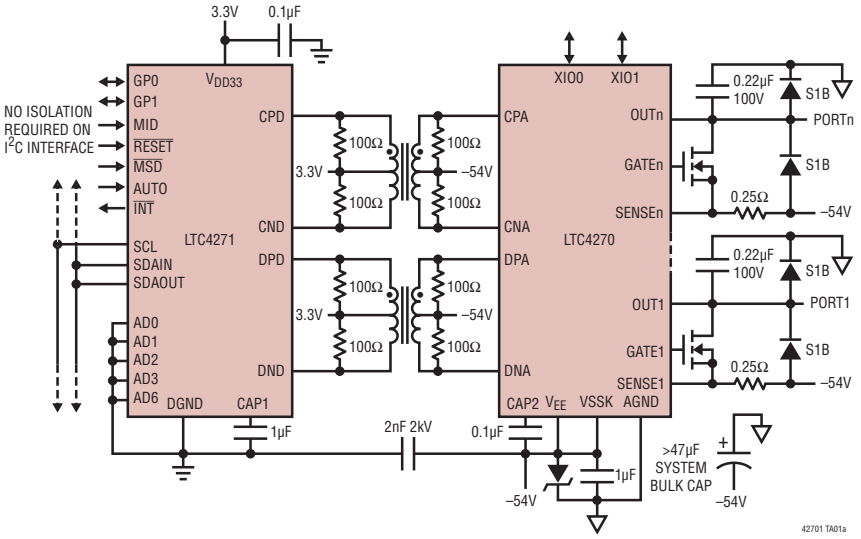

LTC4270/LTC4271 FAMILY

LTC4270 GRADE	ISOLATION	LTPoE++	PoE+	PoE	MAX DELIVERED POWER
A	Transformer	●	●	●	90W
B	Transformer		●	●	25.5W
C	Transformer			●	13W

ABSOLUTE MAXIMUM RATINGS LTC4270

(Note 1, Note 4)

Supply Voltages
- AGND – V_{EE} ..... –0.3V to 80V
- VSSK (Note 7) ..... V_{EE} – 0.3V to V_{EE} + 0.3V

Digital Pins
- XIOn ..... V_{EE} – 0.3V to CAP2 + 0.3V

Analog Pins
- SENSEn, GATEn, OUTn ..... V_{EE} – 0.3V to V_{EE} + 80V
- CAP2 (Note 13) ..... V_{EE} –0.3V to V_{EE} + 5V

CPA, CNA, DPA, DNA.....V_{EE} – 0.3V to V_{EE} + 0.3

Operating Ambient Temperature Range
- LTC4270I .....–40°C to 85°C

Junction Temperature (Note 2) ..... 125°C
Storage Temperature Range .....–65 to 150°C
Lead Temperature (Soldering, 10 sec).....300°C

ABSOLUTE MAXIMUM RATINGS LTC4271

(Note 1)

Supply Voltages
- V_{DD} – DGND ..... –0.3V to 3.6V

Digital Pins
- SCL, SDAIN, SDAOUT, $\overline{INT}$, $\overline{RESET}$, $\overline{MSD}$, ADn, AUTO, MID, GPn .....DGND – 0.3V to V_{DD} + 0.3V

Operating Ambient Temperature Range
- LTC4271I.....–40°C to 85°C

Analog Pins
- CAP1 (Note 13).....–0.3V to DGND + 2V

Junction Temperature (Note 2) ..... 125°C
Storage Temperature Range .....–65 to 150°C
Lead Temperature (Soldering, 10 sec).....300°C
CPD, CND, DPD, DND..... DGND – 0.3 to DGND + 0.3

PIN CONFIGURATION

LTC4270

TOP VIEW

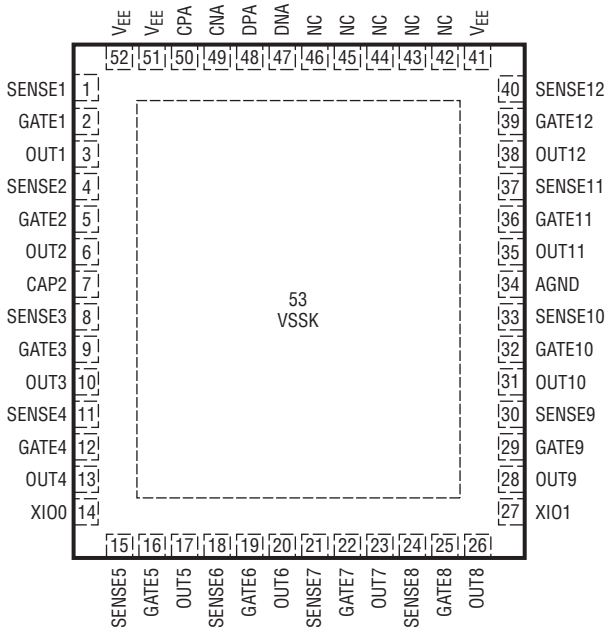

UKG PACKAGE
52-LEAD (7mm × 8mm) PLASTIC QFN

T_{JMAX} = 125°C, θ_{JA} = 40°C/W
EXPOSED PAD (PIN 53) IS VSSK, MUST BE SOLDERED TO PCB

LTC4271

TOP VIEW

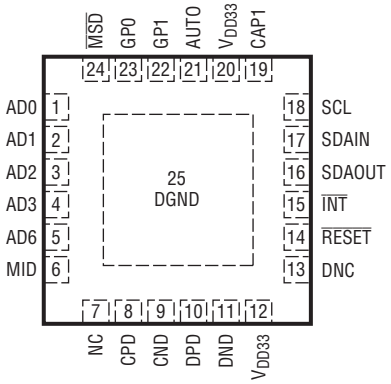

UF PACKAGE
24-LEAD (4mm × 4mm) PLASTIC QFN

T_{JMAX} = 125°C, θ_{JA} = 37°C/W
EXPOSED PAD (PIN 25) IS DGND, MUST BE SOLDERED TO PCB

ORDER INFORMATION

LEAD FREE FINISH	TAPE AND REEL	PART MARKING	PACKAGE DESCRIPTION	MAX PWR	TEMPERATURE RANGE
LTC4271IUF#PBF	LTC4271IUF#TRPBF	4271	24-Lead (4mm × 4mm) Plastic QFN		–40°C to 85°C
LTC4270AIUKG#PBF	LTC4270AIUKG#TRPBF	LTC4270A	52-Lead (7mm × 8mm) Plastic QFN	90W	–40°C to 85°C
LTC4270BIUKG#PBF	LTC4270BIUKG#TRPBF	LTC4270B	52-Lead (7mm × 8mm) Plastic QFN	25.5W	–40°C to 85°C
LTC4270CIUKG#PBF	LTC4270CIUKG#TRPBF	LTC4270C	52-Lead (7mm × 8mm) Plastic QFN	13W	–40°C to 85°C

Consult LTC Marketing for parts specified with wider operating temperature ranges.
Consult LTC Marketing for information on non-standard lead based finish parts.

For more information on lead free part marking, go to: http://www.linear.com/leadfree/
For more information on tape and reel specifications, go to: http://www.linear.com/tapeandreel/

ELECTRICAL CHARACTERISTICS

The ● denotes the specifications which apply over the full operating temperature range, otherwise specifications are at T_A = 25°C. (Notes 3 & 4)

SYMBOL	PARAMETER	CONDITIONS		MIN	TYP	MAX	UNITS
V_{EE}	Main PoE Supply Voltage	AGND – V_{EE}	●	32	54	66	V
		For IEEE Type 1 Compliant Output	●	45		57	V
		For IEEE Type 2 Compliant Output	●	51		57	V
		For LTPoE++ Compliant Output	●	54.75		57	V
	Undervoltage Lock-Out	AGND – V_{EE}	●	20	25	30	V
V_{DD}	V_{DD} Supply Voltage	V_{DD} – DGND	●	3.0	3.3	3.6	V
	Undervoltage Lock-Out	V_{DD} – DGND	●		2.7		V
V_{CAP1}	Internal Regulator Supply Voltage	V_{CAP1} – DGND			1.84		V
V_{CAP2}	Internal Regulator Supply Voltage	V_{CAP2} – V_{EE}			4.3		V
I_{EE}	V_{EE} Supply Current	(AGND – V_{EE}) = 55V	●		9	15	mA
R_{EE}	V_{EE} Supply Resistance	V_{EE} < 15V	●			12	kΩ
I_{DD}	V_{DD} Supply Current	(V_{DD} – DGND) = 3.3V	●		10	15	mA
Detection							
	Detection Current – Forced Current	First Point, AGND – V_{OUTn} = 10V	●	220	240	260	µA
		Second Point, AGND – V_{OUTn} = 3.5V	●	143	160	180	µA
	Detection Voltage – Forced Voltage	AGND – V_{OUTn}, 5µA ≤ I_{OUTn} ≤ 500µA					
		First Point	●	7	8	9	V
		Second Point	●	3	4	5	V
	Detection Current Compliance	AGND – V_{OUTn} = 0V	●		0.8	0.9	mA
V_{OC}	Detection Voltage Compliance	AGND – V_{OUTn}, Open Port	●		10.4	12	V
	Detection Voltage Slew Rate	AGND – V_{OUTn}, C_{PORT} = 0.15µF	●			0.01	V/µs
	Min. Valid Signature Resistance		●	15.5	17	18.5	kΩ
	Max. Valid Signature Resistance		●	27.5	29.7	32	kΩ
Classification							
V_{CLASS}	Classification Voltage	AGND – V_{OUTn}, 0mA ≤ I_{OUTn} ≤ 50mA	●	16.0		20.5	V
	Classification Current Compliance	V_{OUTn} = AGND	●	53	61	67	mA
	Classification Threshold Current	Class 0-1	●	5.5	6.5	7.5	mA
		Class 1-2	●	13.5	14.5	15.5	mA
		Class 2-3	●	21.5	23	24.5	mA
		Class 3-4	●	31.5	33	34.9	mA
		Class 4-Overcurrent	●	45.2	48	50.8	mA
V_{MARK}	Classification Mark State Voltage	AGND – V_{OUTn}, 0.1mA ≤ I_{CLASS} ≤ 5mA	●	7.5	9	10	V
	Mark State Current Compliance	V_{OUTn} = AGND	●	53	61	67	mA
Gate Driver							
	GATE Pin Pull-Down Current	Port Off, V_{GATEn} = V_{EE} + 5V	●	0.4			mA
		Port Off, V_{GATEn} = V_{EE} + 1V	●	0.08	0.12		mA
	GATE Pin Fast Pull-Down Current	V_{GATEn} = V_{EE} + 5V			30		mA
	GATE Pin On Voltage	V_{GATEn} – V_{EE}, I_{GATEn} = 1µA	●	8		14	V
Output Voltage Sense							
V_{PG}	Power Good Threshold Voltage	V_{OUTn} – V_{EE}	●	2	2.4	2.8	V
	OUT Pin Pull-Up Resistance to AGND	0V ≤ (AGND – V_{OUT}) ≤ 5V	●	300	500	700	kΩ

ELECTRICAL CHARACTERISTICS

The ● denotes the specifications which apply over the full operating temperature range, otherwise specifications are at T_A = 25°C. (Notes 3 & 4)

SYMBOL	PARAMETER	CONDITIONS		MIN	TYP	MAX	UNITS
V_{CUT}	Overcurrent Sense Voltage	$V_{SENSEn} – V_{EE}$,					
		hpen = 0Fh, cutn = D4h	●	89	94	99	mV
		hpen = 0Fh, cutn = E2h (Note 12)	●	152	159	168	mV
	Overcurrent Sense in AUTO Pin Mode	Class 0, Class 3	●	89	94	99	mV
		Class 1	●	26	28	30	mV
		Class 2	●	49	52	55	mV
		Class 4	●	152	159	168	mV
V_{LIM}	Active Current Limit in 802.3af Compliant Mode	$V_{SENSEn} – V_{EE}$, hpen = 0Fh, limn = 80h					
		$V_{EE} < V_{OUT} <$ AGND – 29V	●	102	106	112	mV
		AGND – V_{OUT} = 0V (Note 12)	●	25		50	mV
	Active Current Limit in High Power Mode	hpen = 0Fh, limn = C0h					
		$V_{OUT} – V_{EE}$ = 0 – 10V	●	204	212	225	mV
		V_{EE} + 23V < V_{OUT} < AGND – 29V	●	102	106	115	mV
		AGND – V_{OUT} = 0V (Note 12)	●	25		50	mV
	Active Current Limit in AUTO Pin Mode	$V_{EE} < V_{OUT}$ < AGND – 10V					
		Class 0 to Class 3	●	102	106	112	mV
		Class 4	●	204	212	225	mV
V_{MIN}	DC Disconnect Sense Voltage	$V_{SENSE} – V_{EE}$, rdis Bit = 0	●	2.6	3.8	4.9	mV
		$V_{SENSE} – V_{EE}$, rdis Bit = 1 (Note 12)	●	1.3	1.9	2.45	mV
V_{SC}	Short-Circuit Sense	$V_{SENSEn} – V_{EE} – V_{LIM}$, rdis Bit = 0	●	125	200	255	mV
		rdis bit = 1 (Note 12)	●	70	100	135	mV
Port Current Readback							
	Resolution	No Missing Codes			12		Bits
	LSB Weight	$V_{SENSEn} – V_{EE}$			30.518		µV/LSB
	Conversion Period				25.1		ms/ Convert
Port Voltage Readback							
	Resolution	No Missing Codes			12		Bits
	LSB Weight	$V_{SENSEn} – V_{EE}$			5.8250		mV/LSB
LTC4270 Die Temperature							
	Die Temperature Offset	Temperature Register = 00h (Note 7)			–40		°C
	Die Temperature LSB Weight	(Note 7)			0.7		°C/LSB
Digital Interface							
V_{ILD}	Digital Input Low Voltage	(Note 6)	●			0.8	V
V_{IHD}	Digital Input High Voltage	(Note 6)	●	2.2			V
	Digital Output Voltage Low	I_{SDAOUT} = 3mA, $I_{\overline{INT}}$ = 3mA	●			0.4	V
		I_{SDAOUT} = 5mA, $I_{\overline{INT}}$ = 5mA	●			0.7	V
	Internal Pull Up to V_{DD}	ADn, $\overline{RESET}$, $\overline{MSD}$, $\overline{INT}$, GPn	●		50		kΩ
	Internal Pull Down To DGND	AUTO, MID	●		50		kΩ

ELECTRICAL CHARACTERISTICS

The ● denotes the specifications which apply over the full operating temperature range, otherwise specifications are at T_A = 25°C. (Notes 3 & 4)

SYMBOL	PARAMETER	CONDITIONS		MIN	TYP	MAX	UNITS
XIO							
V_{OLX}	XIO Digital Output Low	$V_{XIOn} – V_{EE}$, I_{XIOn} = 5mA	●			0.7	V
V_{OHX}	XIO Digital Output High	$V_{XIOn} – V_{EE}$, I_{XIOn} = 100µA	●	3.5			V
	XIO Digital Input Low Voltage	$V_{XIOn} – V_{EE}$	●			0.8	V
	XIO Digital Input High Voltage	$V_{XIOn} – V_{EE}$	●	3.4			V
	Internal Pull Up to V_{EE} + 4.3V	XIO0, XIO1	●		50		kΩ
PSE Timing Characteristics							
t_{DET}	Detection Time	Beginning To End of Detection (Note 7)	●		220		ms
t_{CLE}	Class Event Duration	(Note 7)	●		12		ms
t_{CLEON}	Class Event Turn On Duration	C_{PORT} = 0.6µF (Note 7)	●			0.1	ms
t_{ME}	Mark Event Duration	(Note 7, Note 11)	●		8.6		ms
t_{MEL}	Last Mark Event Duration	Event 2 of 2 or 3 of 3 (Note 7, Note 11)	●	16	22		ms
t_{PON}	Power On Delay in AUTO Pin Mode	From End of Valid Detect to Application of Power to Port (Note 7)	●			60	ms
	Turn-On Rise Time	(AGND – V_{OUT}): 10% to 90% of (AGND - V_{EE}) C_{PORT} = 0.15µF (Note 7)	●	15	24		µs
	Turn-On Ramp Rate	C_{PORT} = 0.15µF (Note 7)	●			10	V/µs
t_{TOCL}	Turn-On Class Transition	C_{PORT} = 0.15µF (Note 7)	●			0.1	ms
t_{ED}	Fault Delay	From I_{CUT} or I_{LIM} Fault to Next Detect (Note 7)	●	1.0	1.1		s
	Midspan Mode Detection Backoff	R_{PORT} = 15.5kΩ (Note 7)	●	2.3	2.5	2.7	s
	Power Removal Detection Delay	From Power Removal After t_{DIS} to Next Detect (Note 7)	●	1.0	1.3	2.5	s
t_{START}	Maximum Current Limit Duration During Port Start-Up	(Note 7)	●	52	59	66	ms
t_{CUT}	Maximum Overcurrent Duration After Port Start-Up	(Note 7)	●	52	59	66	ms
	Maximum Current Limit Duty Cycle	(Note 7)	●	5.8	6.3	6.7	%
t_{LIM}	Maximum Current Limit Duration After Port Start-Up – t_{LIM} Enabled	t_{LIM} = 1 (Note 7, Note 12)	●	10	12	14	ms
	Maximum Current Limit Duration After Port Start-Up – t_{LIM} as t_{CUT}	t_{LIM} = 0 (Note 7, Note 12)	●	52	59	66	ms
t_{MPS}	Maintain Power Signature (MPS) Pulse Width Sensitivity	Current Pulse Width to Reset Disconnect Timer (Note 7, Note 8)	●	1.6		3.6	ms
t_{DIS}	Maintain Power Signature (MPS) Dropout Time	(Note 7, Note 5)	●	320	350	380	ms
$t_{\overline{MSD}}$	Masked Shut Down Delay	(Note 7)				6.5	µs
	I^2C Watchdog Timer Duration	(Note 7)	●	1.5	2	3	s
	Minimum Pulse Width for Masked Shut Down	(Note 7)	●	3			µs
	Minimum Pulse Width for $\overline{RESET}$	(Note 7)	●	4.5			µs

ELECTRICAL CHARACTERISTICS

The ● denotes the specifications which apply over the full operating temperature range, otherwise specifications are at T_A = 25°C. (Notes 3 & 4)

SYMBOL	PARAMETER	CONDITIONS		MIN	TYP	MAX	UNITS
I²C Timing							
f_{SCLK}	Clock Frequency	(Note 7)	●			1	MHz
t_1	Bus Free Time	Figure 5 (Notes 7, 9)	●	480			ns
t_2	Start Hold Time	Figure 5 (Notes 7, 9)	●	240			ns
t_3	SCL Low Time	Figure 5 (Notes 7, 9)	●	480			ns
t_4	SCL High Time	Figure 5 (Notes 7, 9)	●	240			ns
t_5	SDAIN Data Hold Time	Figure 5 (Notes 7, 9)	●	60			ns
t_5	Data Clock to SDAOUT Valid	Figure 5 (Notes 7, 9)	●			130	ns
t_6	Data Set-Up Time	Figure 5 (Notes 7, 9)	●	80			ns
t_7	Start Set-Up Time	Figure 5 (Notes 7, 9)	●	240			ns
t_8	Stop Set-Up Time	Figure 5 (Notes 7, 9)	●	240			ns
t_r	SCL, SDAIN Rise Time	Figure 5 (Notes 7, 9)	●			120	ns
t_f	SCL, SDAIN Fall Time	Figure 5 (Notes 7, 9)	●			60	ns
	Fault Present to $\overline{INT}$ Pin Low	(Notes 7, 9, 10)	●			150	ns
	Stop Condition to $\overline{INT}$ Pin Low	(Notes 7, 9, 10)	●			1.5	µs
	ARA to $\overline{INT}$ Pin High Time	(Notes 7, 9)	●			1.5	µs
	SCL Fall to ACK Low	(Notes 7, 9)	●			130	ns

Note 1: Stresses beyond those listed under Absolute Maximum Ratings may cause permanent damage to the device. With the exception of (V_{DD} – DGND), exposure to any Absolute Maximum Rating condition for extended periods may affect device reliability and lifetime.

Note 2: This IC includes overtemperature protection that is intended to protect the device during momentary overload conditions. Junction temperature will exceed 140°C when overtemperature protection is active. Continuous operation above the specified maximum operating junction temperature may impair device reliability.

Note 3: All currents into device pins are positive; all currents out of device pins are negative.

Note 4: The LTC4270 operates with a negative supply voltage (with respect to AGND). To avoid confusion, voltages in this data sheet are referred to in terms of absolute magnitude.

Note 5: t_{DIS} is the same as t_{MPDO} defined by IEEE 802.3at

Note 6: The LTC4271 digital interface operates with respect to DGND. All logic levels are measured with respect to DGND.

Note 7: Guaranteed by design, not subject to test.

Note 8: The IEEE 802.3af specification allows a PD to present its Maintain Power Signature (MPS) on an intermittent basis without being disconnected. In order to stay powered, the PD must present the MPS for t_{MPS} within any t_{MPDO} time window.

Note 9: Values Measured at V_{ILD} and V_{IHD}

Note 10: If a fault condition occurs during an I²C transaction, the $\overline{INT}$ pin will not be pulled down until a stop condition is present on the I²C bus.

Note 11: Load characteristics of the LTC4270 during Mark: 7V < (AGND – V_{OUTn}) < 10V or I_{OUT} < 50µA.

Note 12: See the LTC4271 Software Programming documentation for information on serial bus usage and device configuration and status registers.

Note 13: Do not source or sink current from CAP1 and CAP2.

TYPICAL PERFORMANCE CHARACTERISTICS

802.3af Power On Sequence in AUTO Pin Mode

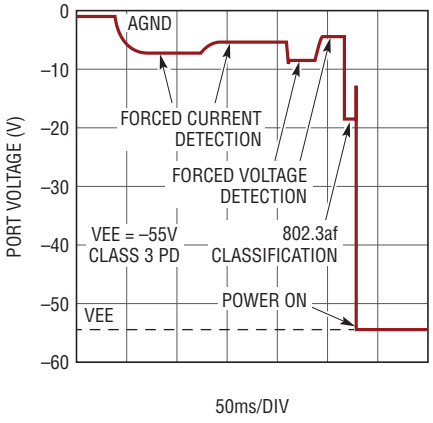

802.3at Power On Sequence in AUTO Pin Mode

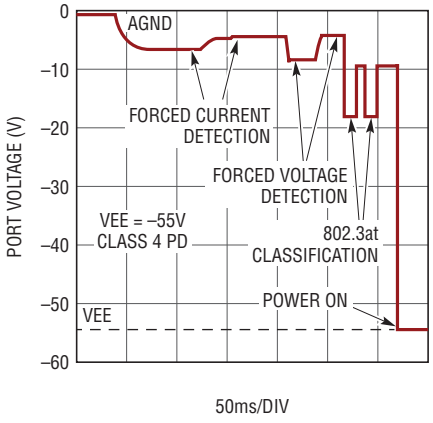

Power On Sequence with 10V$_{PP}$ 60Hz Noise

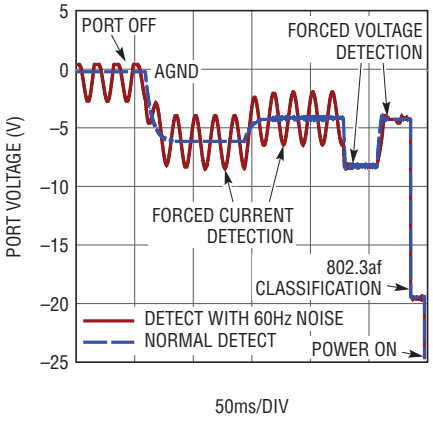

Powering Up into a 180µF Load

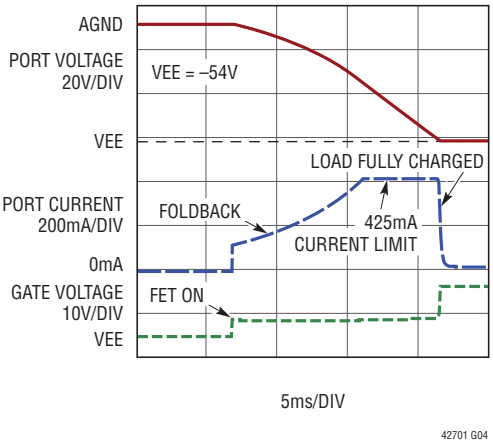

Classification Transient Response to 40mA Load Step

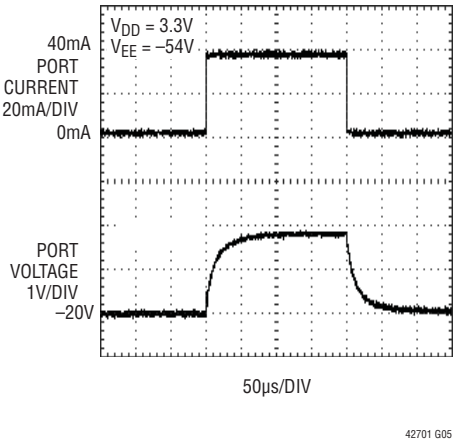

Classification Current Compliance

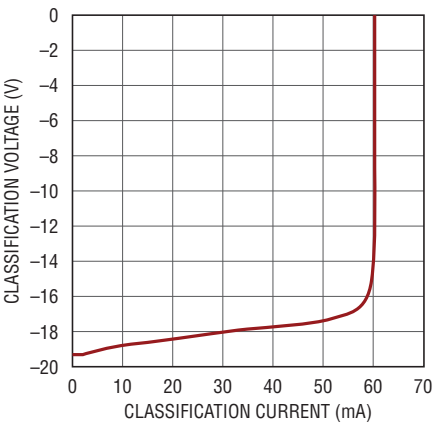

V$_{DD}$ Supply Current vs Voltage

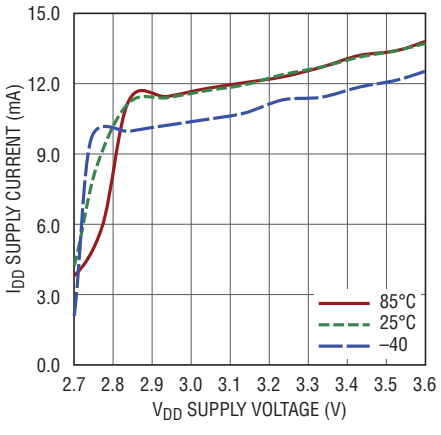

V$_{EE}$ Supply Current vs Voltage

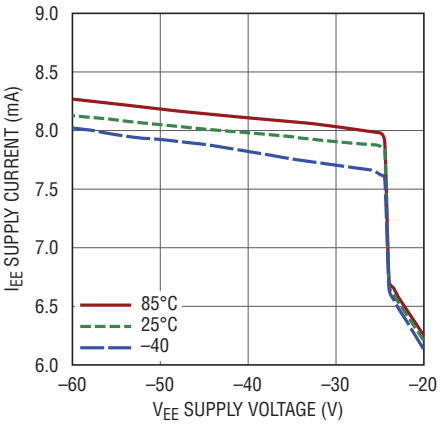

TYPICAL PERFORMANCE CHARACTERISTICS

802.3at I_{LIM} Threshold vs Temperature

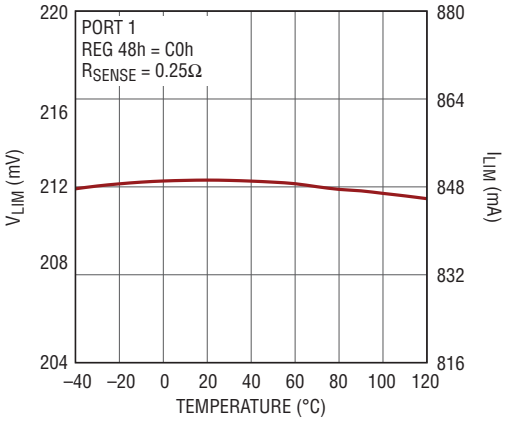

802.3at I_{CUT} Threshold vs Temperature

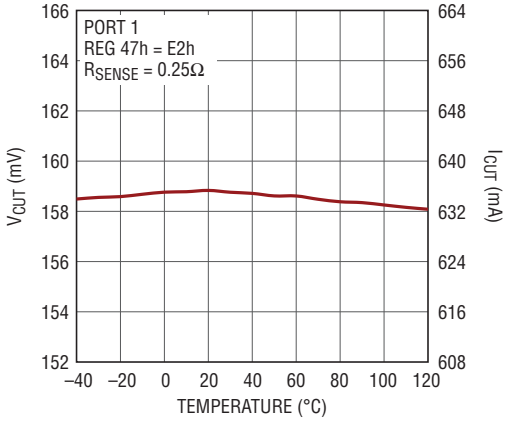

DC Disconnect Threshold vs Temperature

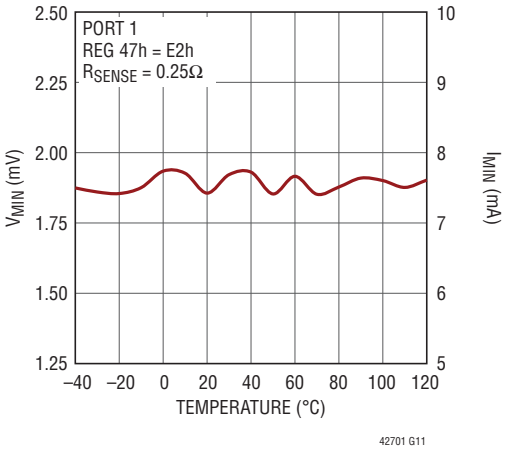

802.3at Current Limit Foldback

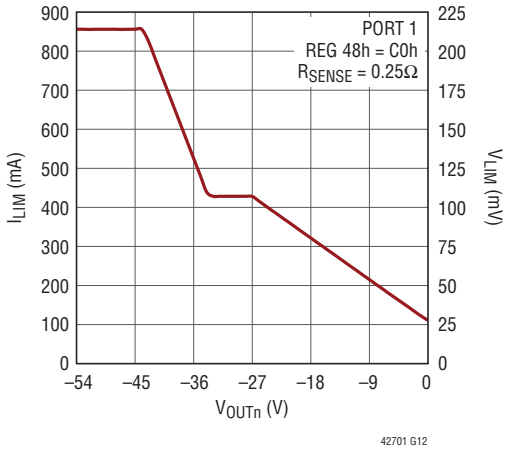

$\overline{INT}$ and SDAOUT Pull Down Voltage vs Load Current

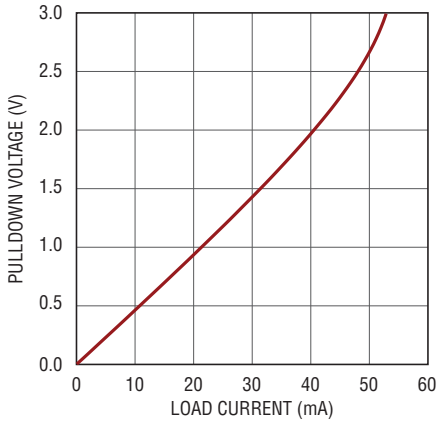

MOSFET Gate Drive With Fast Pull Down

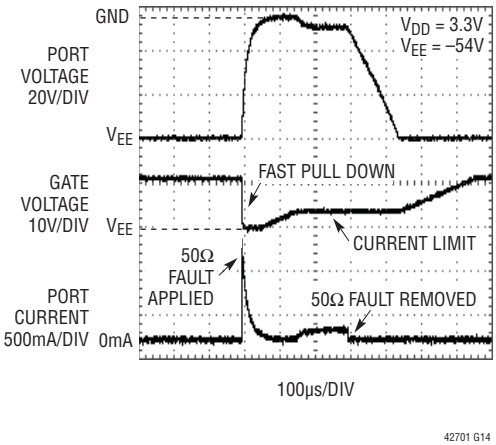

TEST TIMING DIAGRAMS

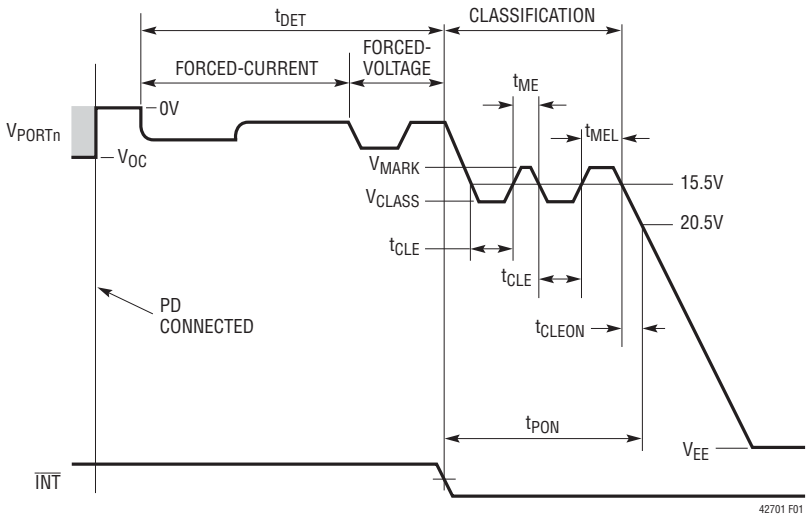

Figure 1. Detect, Class and Turn-On Timing in AUTO Pin or Semi-auto Modes

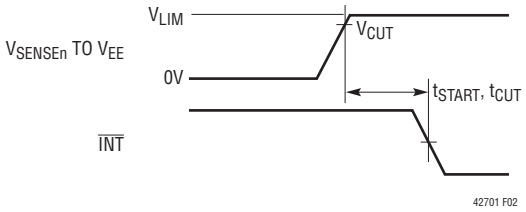

Figure 2. Current Limit Timing

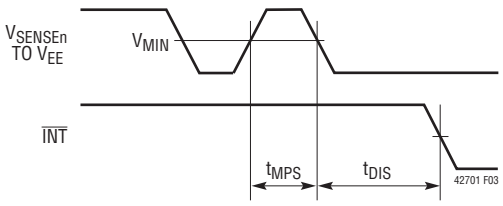

Figure 3. DC Disconnect Timing

TEST TIMING DIAGRAMS

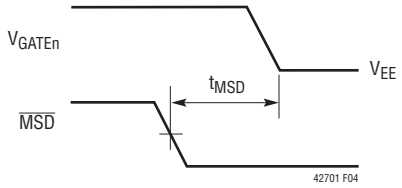

Figure 4. Shut Down Delay Timing

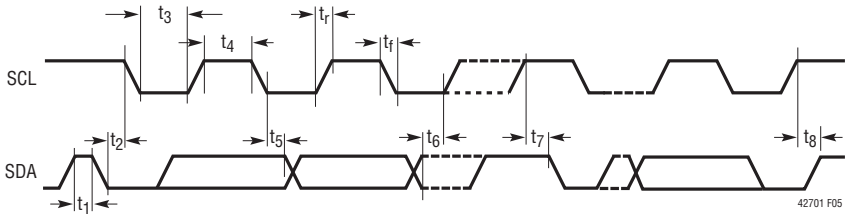

Figure 5. I²C Interface Timing

I²C TIMING DIAGRAMS

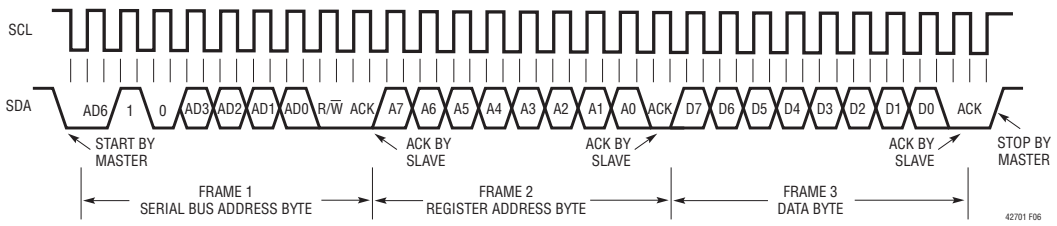

Figure 6. Writing to a Register

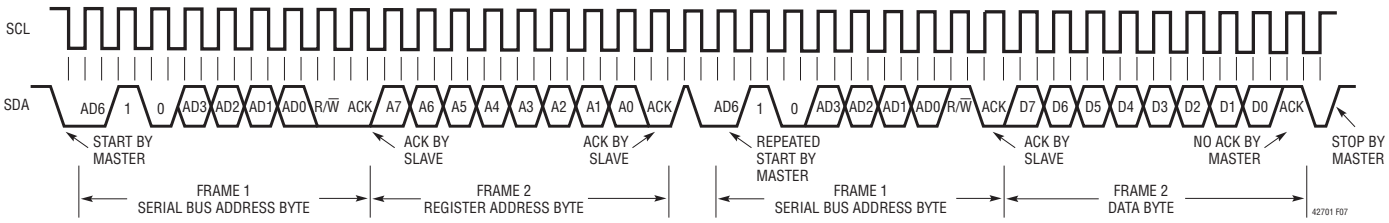

Figure 7. Reading from a Register

I²C TIMING DIAGRAMS

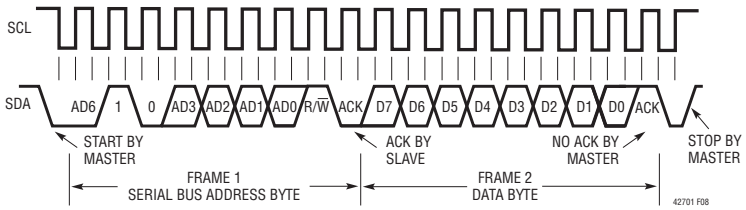

Figure 8. Reading the Interrupt Register (Short Form)

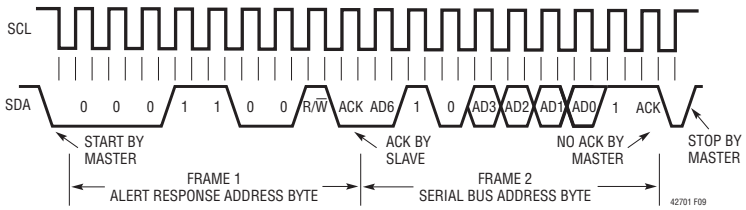

Figure 9. Reading from Alert Response Address

PIN FUNCTIONS

LTC4270

SENSEn (Pins 1, 4, 8, 11, 15, 18, 21, 24, 30, 33, 37, 40): Port n Current Sense Input. SENSEn monitors the external MOSFET current via a 0.5Ω or 0.25Ω sense resistor between SENSEn and V_{EE}. Whenever the voltage across the sense resistor exceeds the overcurrent detection threshold V_{CUT}, the current limit fault timer counts up. If the voltage across the sense resistor reaches the current limit threshold V_{LIM}, the GATEn pin voltage is lowered to maintain constant current in the external MOSFET. See Applications Information for further details. If the port is unused, the SENSEn pin must be tied to V_{EE}.

GATEn (Pins 2, 5, 9, 12, 16, 19, 22, 25, 29, 32, 36, 39): Port n Gate Drive. GATEn should be connected to the gate of the external MOSFET for port n. When the MOSFET is turned on, the gate voltage is driven to 13V (typ) above V_{EE}. During a current limit condition, the voltage at GATEn will be reduced to maintain constant current through the external MOSFET. If the fault timer expires, GATEn is pulled down, turning the MOSFET off and recording a port fault event. If the port is unused, float the GATEn pin.

OUTn (Pins 3, 6, 10, 13, 17, 20, 23, 26, 28, 31, 35, 38): Port n Output Voltage Monitor. OUTn should be connected to the output port. A current limit foldback circuit limits the power dissipation in the external MOSFET by reducing the current limit threshold when the drain-to-source voltage exceeds 10V. The port n Power Good bit is set when the voltage from OUTn to V_{EE} drops below 2.4V (typ). A 500k resistor is connected internally from OUTn to AGND when the port is idle. If the port is unused, the OUTn pin must be floated.

CAP2 (Pin 7): Analog Internal 4.3V Power Supply Bypass Capacitor. Connect 0.1µF ceramic cap to V_{EE}.

XIO0 (Pin 14): General Purpose Digital Input Output. Logic signal between V_{EE} and V_{EE} + 4.3V. Internal pull up.

XIO1 (Pin 27): General Purpose Digital Input Output. Logic signal between V_{EE} and V_{EE} + 4.3V. Internal pull up.

AGND (Pin 34): Analog Ground. Connect AGND to the return for the V_{EE} supply.

V_{EE} (Pins 41, 51, 52): Main PoE Supply Input. Connect to a –45V to –57V supply, relative to AGND. Voltage depends on PSE type (Type 1, Type 2 or LTPoE++.)

DNA (Pin 47): Data Transceiver Negative Input Output (Analog). Connect to DND through a data transformer.

DPA (Pin 48): Data Transceiver Positive Input Output (Analog). Connect to DPD through a data transformer.

CNA (Pin 49): Clock Transceiver Negative Input Output (Analog). Connect to CND through a data transformer.

CPA (Pin 50): Clock Transceiver Positive Input Output (Analog). Connect to CPD through a data transformer.

VSSK (Exposed Pad Pin 53): Kelvin Sense to V_{EE}. Connect to sense resistor common node. Do not connect directly to V_{EE} plane. See Layout Guide.

Common Pins

NC, DNC (LTC4271 Pins 7,13; LTC4270 Pins 42, 43, 44, 45, 46): All pins identified with "NC" or "DNC" must be left unconnected.

LTC4271

AD0 (Pin 1): Address Bit 0. Tie the address pins high or low to set the starting I^2C serial address to which the LTC4271 responds. The chip will respond to this address plus the next two incremental addresses. The base address of the first four ports will be $(A_6 10 A_3 A_2 A_1 A_0)b$. The second and third groups of four ports will respond at the next two logical addresses. Internally pulled up to V_{DD}.

AD1 (Pin 2): Address Bit 1. See AD0.

AD2 (Pin 3): Address Bit 2. See AD0.

AD3 (Pin 4): Address Bit 3. See AD0.

AD6 (Pin 5): Address Bit 6. See AD0.

MID (Pin 6): Midspan Mode Input. When high, the LTC4271 acts as a midspan device. Internally pulled down to DGND.

PIN FUNCTIONS

CPD (Pin 8): Clock Transceiver Positive Input Output (Digital). Connect to CPA through a data transformer.

CND (Pin 9): Clock Transceiver Negative Input Output (Digital). Connect to CNA through a data transformer.

DPD (Pin 10): Data Transceiver Positive Input Output (Digital). Connect to DPA through a data transformer.

DND (Pin 11): Data Transceiver Negative Input Output (Digital). Connect to DNA through a data transformer.

V_{DD33} (Pins 12, 20): V_{DD} IO Power Supply. Connect to a 3.3V power supply relative to DGND. V_{DD33} must be bypassed to DGND near the LTC4271 with at least a 0.1µF capacitor.

$\overline{\text{RESET}}$ (Pin 14): Reset Input, Active Low. When the $\overline{\text{RESET}}$ pin is low, the LTC4270/LTC4271 is held inactive with all ports off and all internal registers reset to their power-up states. When $\overline{\text{RESET}}$ is pulled high, the LTC4271 begins normal operation. $\overline{\text{RESET}}$ can be connected to an external capacitor or RC network to provide a power turn-on delay. Internal filtering of the $\overline{\text{RESET}}$ pin prevents glitches less than 1µs wide from resetting the LTC4270/LTC4271. Internally pulled up to V_{DD}.

$\overline{\text{INT}}$ (Pin 15): Interrupt Output, Open Drain. $\overline{\text{INT}}$ will pull low when any one of several events occur in the LTC4271. It will return to a high impedance state when bits 6 or 7 are set in the Reset PB register (1Ah). The $\overline{\text{INT}}$ signal can be used to generate an interrupt to the host processor, eliminating the need for continuous software polling. Individual $\overline{\text{INT}}$ events can be disabled using the $\overline{\text{INT}}$ Mask register (01h). See LTC4271 Software Programming documentation for more information. The $\overline{\text{INT}}$ pin is only updated between I^2C transactions.

SDAOUT (Pin 16): Serial Data Output, Open Drain Data Output for the I^2C Serial Interface Bus. The LTC4271 uses two pins to implement the bidirectional SDA function to simplify optoisolation of the I^2C bus. To implement a standard bidirectional SDA pin, tie SDAOUT and SDAIN together. See Applications Information for more information.

SDAIN (Pin 17): Serial Data Input. High impedance data input for the I^2C serial interface bus. The LTC4271 uses two pins to implement the bidirectional SDA function to simplify optoisolation of the I^2C bus. To implement a standard bidirectional SDA pin, tie SDAOUT and SDAIN together. See Applications Information for more information.

SCL (Pin 18): Serial Clock Input. High impedance clock input for the I^2C serial interface bus. The SCL pin should be connected directly to the I^2C SCL bus line. SCL must be tied high if the I^2C serial interface bus is not used.

CAP1 (Pin 19): Core Power Supply Bypass Capacitor. Connect a 1µF Bypass capacitance to DGND for the internal 1.8V regulator. Do not use other capacitor values.

AUTO (Pin 21): AUTO Pin Mode Input. AUTO pin mode allows the LTC4271 to detect and power up a PD even if there is no host controller present on the I^2C bus. The AUTO pin determines the state of the internal registers when the LTC4271 is reset or comes out of V_{DD} UVLO (see LTC4271 Software Programming documentation). The states of these register bits can subsequently be changed via the I^2C interface. Internally pulled down to DGND. Must be tied locally to either V_{DD} or DGND.

GP1 (Pin 22): General Purpose Digital Input Output for customer applications. Referenced to DGND.

GP0 (Pin 23): General Purpose Digital Input Output for customer applications. Referenced to DGND.

$\overline{\text{MSD}}$ (Pin 24): Maskable Shutdown Input. Active low. When pulled low, all ports that have their corresponding mask bit set in the mconfig register (17h) will be reset. Internal filtering of the $\overline{\text{MSD}}$ pin prevents glitches less than 1µs wide from resetting ports. The MSD Pin Mode register can configure the $\overline{\text{MSD}}$ pin polarity. Internally pulled up to V_{DD}.

DGND (Exposed Pad Pin 25): Digital Ground. DGND should be connected to the return from the V_{DD} supply.

APPLICATIONS INFORMATION

OVERVIEW

Power over Ethernet, or PoE, is a standard protocol for sending DC power over copper Ethernet data wiring. The IEEE group that administers the 802.3 Ethernet data standards added PoE powering capability in 2003. This original PoE spec, known as 802.3af, allowed for 48V DC power at up to 13W. This initial specification was widely popular, but 13W was not adequate for some requirements. In 2009, the IEEE released a new standard, known as 802.3at or PoE+, increasing the voltage and current requirements to provide 25W of power.

The IEEE standard also defines PoE terminology. A device that provides power to the network is known as a PSE, or power sourcing equipment, while a device that draws power from the network is known as a PD, or powered device. PSEs come in two types: Endpoints (typically network switches or routers), which provide data and power; and Midspans, which provide power but pass through data. Midspans are typically used to add PoE capability to existing non-PoE networks. PDs are typically IP phones, wireless access points, security cameras, and similar devices.

PoE++ Evolution

Even during the process of creating the IEEE PoE+ 25.5W specification it became clear that there was a significant and increasing need for more than 25.5W of delivered power. The A-grade LTC4270/LTC4271 chipset responds to this market by allowing a reliable means of providing up to 90W of delivered power to a LTPoE++ PD. The LTPoE++ specification provides reliable detection and classification extensions to the existing IEEE PoE protocols that are backward compatible and interoperable with existing Type 1 and Type 2 PDs. Unlike other proprietary PoE++ solutions Linear's LTPoE++ provides mutual identification between the PSE and PD. This ensures the LTPoE++ PD knows it may use the requested power at start-up because it has detected a LTPoE++ PSE. LTPoE++ PSEs can differentiate between a LTPoE++ PD and all other types of IEEE compliant PDs allowing LTPoE++ PSEs to remain compliant and interoperable with existing equipment.

LTC4270/LTC4271 Product Family

The LTC4270/LTC4271 family is a fourth generation 12-port PSE controller that implements 12 PSE ports in either an endpoint or midspan design. Virtually all necessary circuitry is included to implement an IEEE 802.3at compliant PSE design, requiring only an external power MOSFET and sense resistor per channel; these minimize power loss compared to alternative designs with onboard MOSFETs and increase system reliability in the event a single channel fails.

All grades of the LTC4270/LTC4271 family offer advanced fourth generation PSE features, including per-port current monitoring, global temperature and V_{EE} monitoring, port current policing, one second current averaging and four general purpose input/output pins.

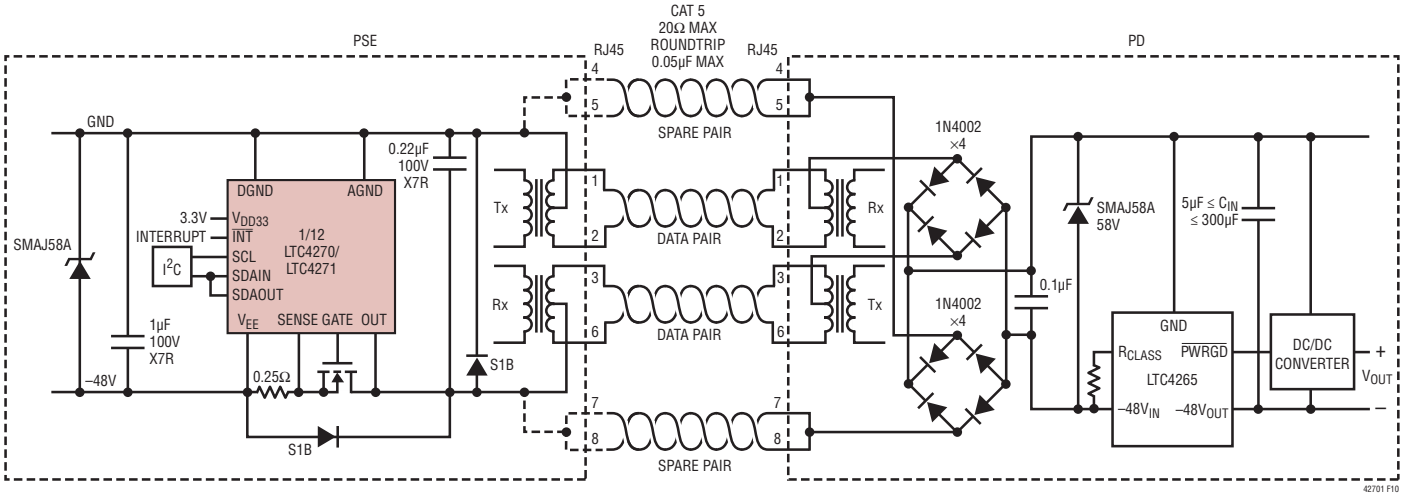

Figure 10. Power over Ethernet System Diagram

APPLICATIONS INFORMATION

The LTC4270/LTC4271 chipset implements a proprietary isolation scheme for inter-chip communication. This architecture dramatically reduces BOM cost by replacing expensive opto-isolators and isolated power supplies with a single low-cost transformer.

The LTC4270/LTC4271 comes in three grades which support different PD power levels.

The A-grade LTC4270/LTC4271 chipset extends PoE power delivery capabilities to LTPoE++ levels. LTPoE++ is a Linear Technology proprietary specification allowing for the delivery of up to 90W to LTPoE++ compliant PDs. The LTPoE++ architecture extends the IEEE physical power negotiation to include 35W, 45W, 70W and 90W power levels. The A-grade LTC4270/LTC4271 also incorporates all B- and C-grade features.

The B-grade LTC4270/LTC4271 is a fully IEEE-compliant Type 2 PSE supporting autonomous detection, classification and powering of Type 1 and Type 2 PDs. The B-grade LTC4270/LTC4271 also incorporates all C-grade features.

The C-grade LTC4270/LTC4271 is a fully autonomous 802.3af Type 1 PSE solution. Intended for use only with the AUTO pin tied high, the C-grade chipset autonomously supports detection, classification and powering of Type 1 PDs. As a Type 1 PSE, two event classification is prohibited and Class 4 PDs are automatically treated as Class 0 PDs.

PoE BASICS

Common Ethernet data connections consist of two or four twisted pairs of copper wire (commonly known as CAT-5 cable), transformer-coupled at each end to avoid ground loops. PoE systems take advantage of this coupling arrangement by applying voltage between the center-taps of the data transformers to transmit power from the PSE to the PD without affecting data transmission. Figure 10 shows a high level PoE system schematic.

To avoid damaging legacy data equipment that does not expect to see DC voltage, the PoE spec defines a protocol that determines when the PSE may apply and remove power. Valid PDs are required to have a specific 25k common mode resistance at their input. When such a PD is connected to the cable, the PSE detects this signature resistance and turns on the power. When the PD is later disconnected, the PSE senses the open circuit and turns power off. The PSE also turns off power in the event of a current fault or short circuit.

When a PD is detected, the PSE optionally looks for a classification signature that tells the PSE the maximum power the PD will draw. The PSE can use this information to allocate power among several ports, to police the current consumption of the PD, or to reject a PD that will draw more power than the PSE has available. The classification step is optional; if a PSE chooses not to classify a PD, it must assume that the PD is a 13W (full 802.3af power) device.

New in 802.3at

The newer 802.3at standard supersedes 802.3af and brings several new features:

- A PD may draw as much as 25.5W. Such PDs (and the PSEs that support them) are known as Type 2. Older 13W 802.3af equipment is classified as Type 1. Type 1 PDs will work with all PSEs; Type 2 PDs may require Type 2 PSEs to work properly. The LTC4270/LTC4271 is designed to work in both Type 1 and Type 2 PSE designs, and also supports non-standard configurations at higher power levels.
- The Classification protocol is expanded to allow Type 2 PSEs to detect Type 2 PDs, and to allow Type 2 PDs to determine if they are connected to a Type 2 PSE. Two versions of the new Classification protocol are available: an expanded version of the 802.3af Class Pulse protocol, and an alternate method integrated with the existing LLDP protocol (using the Ethernet data path). The LTC4270/LTC4271 fully supports the new Class Pulse protocol and is also compatible with the LLDP protocol (which is implemented in the data communications layer, not in the PoE circuitry).
- Fault protection current levels and timing are adjusted to reduce peak power in the MOSFET during a fault; this allows the new 25.5W power levels to be reached using the same MOSFETs as older 13W designs.

APPLICATIONS INFORMATION

Extended Power LTPoE++

A-grade LTC4270/LTC4271 parts add the capability to autonomously deliver up to 90W of power to the PD. LTPoE++ PDs may forgoe 802.3 LLDP support and rely solely on the LTPoE++ Physical Classification to negotiate power with LTPoE++ PSEs; this greatly simplifies high-power PD implementations.

LTPoE++ may be optionally enabled for A-grade LTC4270/LTC4271s by setting both the High Power Enable and LTPoE++ Enable bits.

The higher levels of LTPoE++ delivery impose additional layout and component selection constraints. LTC4270 pin selects allow the AUTO pin mode LTC4271 to autonomously power up to supported power levels. If the AUTO pin is high, the XIO1 and XIO0 pins are sampled at reset to determine the maximum deliverable power. PDs requesting more than the available power limits are not powered.

Table 1. LTPoE++ AUTO Pin Mode Maximum Delivered Power Capabilities

POWER	XIO1	XIO0
35W	0	0
45W	0	1
70W	1	0
90W	1	1

BACKWARDS COMPATIBILITY

The LTC4270/LTC4271 chipset is designed to be backward compatible with the LTC4266, operating in Type 2 mode, without software changes; only minor layout changes are required to implement a fully compliant IEEE 802.3at design.

Some LTC4266 registers have been obsoleted in the LTC4270/LTC4271 chipset. The obsoleted registers are not required for 802.3at compliant PSE operation. For more details about software differences between the LTC4266 and LTC4270/LTC4271, refer to the LTC4271 Software Programming document.

Operation with high power mode disabled is obsoleted in the LTC4270/LTC4271 chipset. All operations previously available in low power mode are fully implemented as a subset of the high power mode capabilities.

OPERATING MODES

The LTC4270/LTC4271 includes 12 independent ports, each of which can operate in one of four modes: manual, semi-auto, AUTO pin, or shutdown.

Table 2. Operating Modes

MODE	AUTO PIN	OPMD	DETECT/ CLASS	POWER-UP	AUTOMATIC I_{CUT}/I_{LIM} ASSIGNMENT
AUTO Pin	1	11b	Enabled at Reset	Automatically	Yes
Reserved	0	11b	N/A	N/A	N/A
Semi-auto	0	10b	Host Enabled	Upon Request	No
Manual	0	01b	Once Upon Request	Upon Request	No
Shutdown	0	00b	Disabled	Disabled	No

In manual mode, the port waits for instructions from the host system before taking any action. It runs a single detection or classification cycle when commanded to by the host, and reports the result in its Port Status register. The host system can command the port to turn on or off the power at any time.

In semi-auto mode, the port repeatedly attempts to detect and classify any PD attached to it. It reports the status of these attempts back to the host, and waits for a command from the host before turning on power to the port. The host must enable detection (and optionally classification) for the port before detection will start.

AUTO pin mode operates the same as semi-auto mode except it will automatically turn on the power to the port if detection is successful. AUTO pin mode will autonomously set the I_{CUT} and I_{LIM} values based on the class result. This operational mode is only valid if the AUTO pin is high.

In shutdown mode, the port is disabled and will not detect or power a PD.

Regardless of which mode it is in, the LTC4270/LTC4271 will remove power automatically from any port that generates a current limit fault. It will also automatically remove power from any port that generates a disconnect event if disconnect detection is enabled. The host controller may also command the port to remove power at any time.

APPLICATIONS INFORMATION

Reset and the AUTO/MID Pins

The initial LTC4270/LTC4271 configuration depends on the state of the AUTO and MID pins during reset. Reset occurs at power-up, or whenever the $\overline{\text{RESET}}$ pin is pulled low or the global Reset All bit is set. Note that the AUTO pin is only sampled when a reset occurs. Changing the state of AUTO or MID after power-up will not properly change the port behavior of the LTC4270/LTC4271 until a reset occurs.

Although typically used with a host controller, the LTC4270/LTC4271 can also be used in a standalone mode with no connection to the serial interface. If there is no host present, the AUTO pin should be tied high so that, at reset, all ports will be configured to operate automatically. Each port will detect and classify repeatedly until a PD is discovered, set I_{CUT} and I_{LIM} according to the classification results, apply power to valid PDs, and remove power when a PD is disconnected.

Table 3 shows the I_{CUT} and I_{LIM} values that will be automatically set in standalone (AUTO pin) mode, based on the discovered class.

Table 3. I_{CUT} and I_{LIM} Values in Standalone Mode

CLASS	I_{CUT}	I_{LIM}
Class 1	112mA	425mA
Class 2	206mA	425mA
Class 3 or 0	375mA	425mA
Class 4	638mA	850mA

The automatic setting of I_{CUT} and I_{LIM} values only occurs if the LTC4270/LTC4271 is reset with the AUTO pin high.

If the standalone application is a midspan, the MID pin should be tied high to enable correct midspan detection timing.

DETECTION

Detection Overview

To avoid damaging network devices that were not designed to tolerate DC voltage, a PSE must determine whether the connected device is a real PD before applying power. The IEEE specification requires that a valid PD have a common-mode resistance of 25k ±5% at any port voltage below 10V. The PSE must accept resistances that fall between 19k and 26.5k, and it must reject resistances above 33k or below 15k (shaded regions in Figure 11). The PSE may choose to accept or reject resistances in the undefined areas between the must-accept and must-reject ranges. In particular, the PSE must reject standard computer network ports, many of which have 150Ω common-mode termination resistors that will be damaged if power is applied to them (the black region at the left of Figure 11).

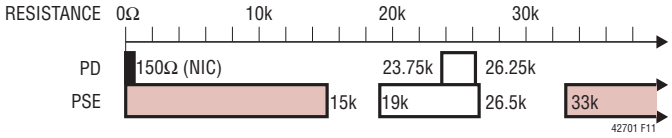

Figure 11. IEEE 802.3af Signature Resistance Ranges

4-Point Detection

The LTC4270/LTC4271 uses a 4-point detection method to discover PDs. False-positive detections are minimized by checking for signature resistance with both forced-current and forced-voltage measurements.

Initially, two test currents are forced onto the port (via the OUTn pin) and the resulting voltages are measured. The detection circuitry subtracts the two V-I points to determine the resistive slope while removing offset caused by series diodes or leakage at the port (see Figure 12). If the forced-current detection yields a valid signature resistance, two test voltages are then forced onto the port and the resulting currents are measured and subtracted. Both methods must report valid resistances for the port to report a valid detection. PD signature resistances between 17k and 29k (typically) are detected as valid and reported as Detect Good in the corresponding Port Status register. Values outside this range, including open and short circuits, are also reported. If the port measures less than 1V at the first forced-current test, the detection cycle will abort and Short Circuit will be reported. Table 4 shows the possible detection results.

APPLICATIONS INFORMATION

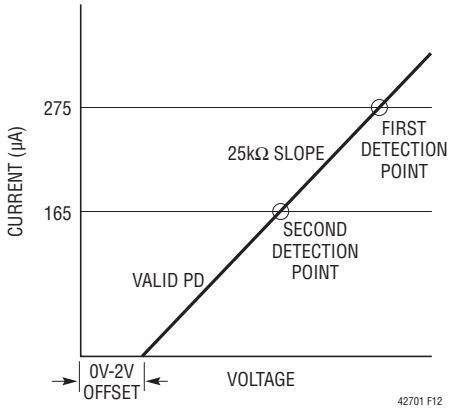

Figure 12. PD Detection

Table 4. Detection Status

MEASURED PD SIGNATURE	DETECTION RESULT
Incomplete or Not Yet Tested	Detect Status Unknown
< 2.4k	Short Circuit
Capacitance > 2.7µF	C_{PD} too High
2.4k < R_{PD} < 17k	R_{SIG} too Low
17k < R_{PD} < 29k	Detect Good
> 29k	R_{SIG} too High
> 50k	Open Circuit
Voltage > 10V	Port Voltage Outside Detect Range

More on Operating Modes

The port's operating mode determines when the LTC4270/LTC4271 runs a detection cycle. In manual mode, the port will idle until the host orders a detect cycle. It will then run detection, report the results, and return to idle to wait for another command.

In semi-auto mode, the LTC4270/LTC4271 autonomously polls a port for PDs, but it will not apply power until commanded to do so by the host. The Port Status register is updated at the end of each detection cycle.

If a valid signature resistance is detected and classification is enabled, the port will classify the PD and report that result as well. The port will then wait for at least 100ms (or 2 seconds if midspan mode is enabled), and will repeat the detection cycle to ensure that the data in the Port Status register is up-to-date.

If the port is in semi-auto mode and high power operation is enabled, the port will not turn on in response to a power-on command unless the current detect result is detect good. Any other detect result will generate a t_{START} fault if a power-on command is received. In high power mode the port must be placed in manual mode to force a port on regardless of detect outcome.

Behavior in AUTO pin mode is similar to semi-auto; however, after detect good is reported and the port is classified (if classification is enabled), it is automatically powered on without further intervention. In standalone (AUTO pin) mode, the I_{CUT} and I_{LIM} thresholds are automatically set; see the Reset and the AUTO/MID Pins section for more information.

The signature detection circuitry is disabled when the port is initially powered up with the AUTO pin low, in shutdown mode, or when the corresponding Detect Enable bit is cleared.

Detection of Legacy PDs

Proprietary PDs that predate the original IEEE 802.3af standard are commonly referred to today as legacy devices. One type of legacy PD uses a large common mode capacitance (>10µF) as the detection signature. Note that PDs in this range of capacitance are defined as invalid, so a PSE that detects legacy PDs is technically noncompliant with the IEEE spec. The LTC4270/LTC4271 can be configured to detect this type of legacy PD. Legacy detection is disabled by default, but can be manually enabled on a per-port basis. When enabled, the port will report Detect Good when it sees either a valid IEEE PD or a high-capacitance legacy PD. With legacy mode disabled, only valid IEEE PDs will be recognized.

CLASSIFICATION

802.3af Classification

A PD may optionally present a classification signature to the PSE to indicate the maximum power it will draw while operating. The IEEE specification defines this signature as a constant current draw when the PSE port voltage is in the V_{CLASS} range (between 15.5V and 20.5V), with the current level indicating one of 5 possible PD classes. Figure 13 shows a typical PD load line, starting with the slope of the 25k signature resistor below 10V, then transitioning to

APPLICATIONS INFORMATION

the classification signature current (in this case, Class 3) in the V_{CLASS} range. Table 4 shows the possible classification values.

Table 4. 802.3af and 802.3at Classification Values

CLASS	RESULT
Class 0	No Class Signature Present; Treat Like Class 3
Class 1	3W
Class 2	7W
Class 3	13W
Class 4	25.5W (Type 2)

If classification is enabled, the port will classify the PD immediately after a successful detection cycle in semi-auto or AUTO pin modes, or when commanded to in manual mode. It measures the PD classification signature by applying 18V for 12ms (both values typical) to the port via the OUTn pin and measuring the resulting current; it then reports the discovered class in the Port Status register. If the LTC4270/LTC4271 is in AUTO pin mode, it will additionally use the classification result to set the I_{CUT} and I_{LIM} thresholds. See the Reset and the AUTO/MID Pin section for more information.

The classification circuitry is disabled when the port is initially powered up with the AUTO pin low, in shutdown mode, or when the corresponding Class Enable bit is cleared.

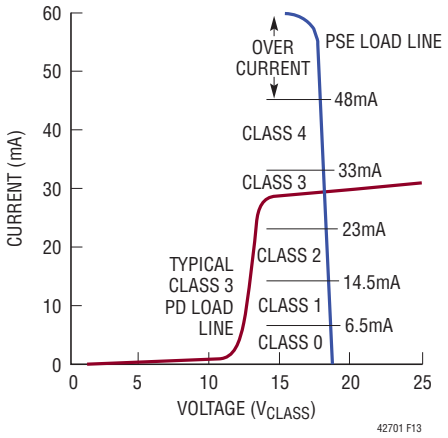

Figure 13. PD Classification

802.3at 2-Event Classification

The 802.3at specification defines two methods of classifying a Type 2 PD. A-grade and B-grade LTC4270/LTC4271 parts support 802.3at 2-event classification.

One method adds extra fields to the Ethernet LLDP data protocol; although the LTC4270/LTC4271 is compatible with this classification method, it cannot perform classification directly since it doesn't have access to the data path. LLDP classification requires the PSE to power the PD as a standard 802.3af (Type 1) device. It then waits for the host to perform LLDP communication with the PD and update the PSE port data. The LTC4270/LTC4271 supports changing the I_{LIM} and I_{CUT} levels on the fly, allowing the host to complete LLDP classification.

The second 802.3at classification method, known as 2-event classification or ping-pong, is supported by the LTC4270/LTC4271. A Type 2 PD that is requesting more than 13W will indicate Class 4 during normal 802.3af classification. If the LTC4270/LTC4271 sees Class 4, it forces the port to a specified lower voltage (called the mark voltage, typically 9V), pauses briefly, and then re-runs classification to verify the Class 4 reading (Figure 1). It also sets a bit in the High Power Status register to indicate that it ran the second classification cycle. The second cycle alerts the PD that it is connected to a Type 2 PSE which can supply Type 2 power levels.

2-event ping-pong classification is enabled by setting a bit in the port's High Power Mode register. Note that a ping-pong enabled port only runs the second classification cycle when it detects a Class 4 device; if the first cycle returns Class 0 to 3, the port determines it is connected to a Type 1 PD and does not run the second classification cycle.

Invalid Type 2 Class Combinations

The 802.3at specification defines a Type 2 PD class signature as two consecutive Class 4 results; a Class 4 followed by a Class 0-3 is not a valid signature. In AUTO pin mode, the LTC4270/LTC4271 will power a detected PD regardless of the classification results, with one exception: if the PD presents an invalid Type 2 signature (Class 4 followed by Class 0 to 3), the LTC4270/LTC4271 will not provide power and will restart the detection process. To aid in diagnosis,

APPLICATIONS INFORMATION

the Port Status register will always report the results of the last class pulse, so an invalid Class 4–Class 2 combination would report a second class pulse was run in the High Power Status register (which implies that the first cycle found class 4), and Class 2 in the Port Status register.

POWER CONTROL

The primary function of the LTC4270/LTC4271 is to control the delivery of power to the PSE port. It does this by controlling the gate drive voltage of an external power MOSFET while monitoring the current via an external sense resistor and the output voltage at the OUT pin. This circuitry serves to couple the raw V_{EE} input supply to the port in a controlled manner that satisfies the PDs power needs while minimizing both power dissipation in the MOSFET and disturbances on the V_{EE} backplane.

Inrush Control

Once the command has been given to turn on a port, the LTC4270/LTC4271 ramps up the GATE pin of that port's external MOSFET in a controlled manner. Under normal power-up circumstances, the MOSFET gate will rise until the port current reaches the inrush current limit level (typically 425mA), at which point the GATE pin will be servoed to maintain the specified I_{INRUSH} current. During this inrush period, a timer (t_{START}) runs. When output charging is complete, the port current will fall and the GATE pin will be allowed to continue rising to fully enhance the MOSFET and minimize its on-resistance. The final V_{GS} is nominally 13V. The inrush period is maintained until the t_{START} timer expires. At this time if the inrush current limit level is still exceeded, the port will be turned back off and a t_{START} fault reported.

Current Limit

Each LTC4270/LTC4271 port includes two current limiting thresholds (I_{CUT} and I_{LIM}), each with a corresponding timer (t_{CUT} and t_{LIM}). Setting the I_{CUT} and I_{LIM} thresholds depends on several factors: the class of the PD, the voltage of the main supply (V_{EE}), the type of PSE (Type 1 or Type 2), the sense resistor (0.5Ω or 0.25Ω), the SOA of the MOSFET, and whether or not the system is required to enforce class current levels.

Per the IEEE specification, the LTC4270/LTC4271 will allow the port current to exceed I_{CUT} for a limited period of time before removing power from the port, whereas it will actively control the MOSFET gate drive to keep the port current below I_{LIM}. The port does not take any action to limit the current when only the I_{CUT} threshold is exceeded, but does start the t_{CUT} timer. If the current drops below the I_{CUT} current threshold before its timer expires, the t_{CUT} timer counts back down, but at 1/16 the rate that it counts up. If the t_{CUT} timer reaches 60ms (typical) the port is turned off and the port t_{CUT} fault is set. This allows the current limit circuitry to tolerate intermittent overload signals with duty cycles below about 6%; longer duty cycle overloads will turn the port off.

The I_{LIM} current limiting circuit is always enabled and actively limiting port current. The t_{LIM} timer is enabled only when the t_{LIM} Enable bit is set. This allows t_{LIM} to be set to a shorter value than t_{CUT} to provide more aggressive MOSFET protection and turn off a port before MOSFET damage can occur. The t_{LIM} timer starts when the I_{LIM} threshold is exceeded. When the t_{LIM} timer reaches 12ms (typical) the port is turned off and the port t_{LIM} fault is set. When the t_{LIM} Enable bit is disabled t_{LIM} behaviors are tracked by the t_{CUT} timer, which counts up during both I_{LIM} and I_{CUT} events.

I_{CUT} is typically set to a lower value than I_{LIM} to allow the port to tolerate minor faults without current limiting.

Per the IEEE specification, the LTC4270/LTC4271 will automatically set I_{LIM} to 425mA (shown in bold in Table 5) during inrush at port turn-on, and then switch to the programmed I_{LIM} setting once inrush has completed. To maintain IEEE compliance, I_{LIM} should be kept at 425mA for all Type 1 PDs, and 850mA if a Type 2 PD is detected. I_{LIM} is automatically reset to 425mA when a port turns off.

APPLICATIONS INFORMATION

Table 5. Example Current Limit Settings

	INTERNAL REGISTER SETTING (hex)	
I_{LIM} (mA)	R_{SENSE} = 0.5Ω	R_{SENSE} = 0.25Ω
53	88	
106	08	88
159	89	
213	80	08
266	8A	
319	09	89
372	8B	
425	**00**	**80**
478	8E	
531	92	8A
584	CB	
638	10	90
744	D2	9A
850	**40**	**C0**
956	4A	CA
1063	50	D0
1169	5A	DA
1275	60	E0
1488	52	49
1700		40
1913		4A
2125		50
2338		5A
2550		60
2975		52

I_{LIM} Foldback

The LTC4270/LTC4271 features a two-stage foldback circuit that reduces the port current if the port voltage falls below the normal operating voltage. This keeps MOSFET power dissipation at safe levels for typical 802.3af MOSFETs, even at extended 802.3at power levels. Current limit and foldback behavior are programmable on a per-port basis.

Table 5 gives examples of recommended I_{LIM} register settings.

The LTC4270/LTC4271 will support current levels well beyond the maximum values in the 802.3at specification.

The shaded areas in Table 5 indicate settings that may require a larger external MOSFET, additional heat sinking, or setting t_{LIM} Enable.

MOSFET Fault Detection

LTC4270/LTC4271 PSE ports are designed to tolerate significant levels of abuse, but in extreme cases it is possible for the external MOSFET to be damaged. A failed MOSFET may short source to drain, which will make the port appear to be on when it should be off; this condition may also cause the sense resistor to fuse open, turning off the port but causing the LTC4270 SENSE pin to rise to an abnormally high voltage. A failed MOSFET may also short from gate to drain, causing the LTC4270 GATE pin to rise to an abnormally high voltage. The LTC4270 OUT, SENSE and GATE pins are designed to tolerate up to 80V faults without damage.

If the LTC4270/LTC4271 sees any of these conditions for more than 180µs, it disables all port functionality, reduces the gate drive pull-down current for the port and reports a FET Bad fault. This is typically a permanent fault, but the host can attempt to recover by resetting the port, or by resetting the entire chip if a port reset fails to clear the fault. If the MOSFET is in fact bad, the fault will quickly return, and the port will disable itself again. The remaining ports of the LTC4270/LTC4271 are unaffected.

An open or missing MOSFET will not trigger a FET Bad fault, but will cause a t_{START} fault if the LTC4270/LTC4271 attempts to turn on the port.

Port Current Readback

The LTC4270/LTC4271 measures the current at each port with an internal A/D converter. Port data is only valid when the port power is on and reads zero at all other times. The converter has two modes:

- 100ms mode: Samples are taken continuously and the measured value is updated every 100ms
- 1s mode: Samples are taken continuously; a moving 1 second average is updated every 100ms

APPLICATIONS INFORMATION

Port Current Policing

The LTC4270/LTC4271 can augment t_{CUT} current monitoring with a policing function to track the one second current averages. A port violating the user-specified Port Police Threshold will be shut off with both a t_{CUT} and Police event recorded. A port current Police event can be differentiated from a port t_{CUT} violation by reading both events bits; both bits are set for a Police violation while only the t_{CUT} bit is set for t_{CUT} timer violations.

Port Voltage Readback

The LTC4270/LTC4271 measures the output voltage at each port with an internal A/D converter. Port data is only valid when the port power is on and reads zero at all other times.

Disconnect

The LTC4270/LTC4271 monitors powered ports to ensure the PD continues to draw the minimum specified current. A disconnect timer counts up whenever port current is below 7.5mA (typ), indicating that the PD has been disconnected. If the t_{DIS} timer expires, the port will be turned off and the disconnect bit in the fault event register will be set. If the current returns before the t_{DIS} timer runs out, the timer resets. As long as the PD exceeds the minimum current level more often than t_{DIS}, it will remain powered.

Although not recommended, the DC disconnect feature can be disabled by clearing the corresponding enable bits. Note that this defeats the protection mechanisms built into the IEEE specification, since a powered port will stay powered after the PD is removed. If the still-powered port is subsequently connected to a non-PoE data device, the device may be damaged.

The LTC4270/LTC4271 does not include AC disconnect circuitry, but includes AC Disconnect Enable bits to maintain compatibility with the LTC4259A. If the AC Disconnect Enable bits are set, DC disconnect will be used.

Masked Shutdown

The LTC4270/LTC4271 provides a low latency port shedding feature to quickly reduce the system load when required. By allowing a pre-determined set of ports to be turned off, the current on an overloaded main power supply can be reduced rapidly while keeping high priority devices powered. Each port can be configured to high or low priority; all low-priority ports will shut down within 6.5µs after the $\overline{MSD}$ pin is pulled low, high priority ports will remain powered. If a port is turned off via $\overline{MSD}$, the corresponding Detection and Classification Enable bits are cleared, so the port will remain off until the host explicitly re-enables detection.

In the LTC4270/LTC4271 chipset the active level of $\overline{MSD}$ is register configurable as active high or low. The default is LTC4266-compatible active low behavior.

Temperature and V_{EE} Readback

The LTC4270/LTC4271 measures the analog die temperature and V_{EE} voltage with an internal 12-bit A/D converter.

General Purpose IO

Two sets of general purpose IO pins are available in the LTC4270/LTC4271 chipset. The first set of general purpose IO are GP1 and GP0. These fully bidirectional IO are 3.3V CMOS IO on the LTC4271 chip.

The second set of general purpose IO pins are XIO1 and XIO0. These fully bidirectional IO are 4.3V CMOS IO on the LTC4270 chip.

Code Download

LTC4271 firmware is field-upgradable by downloading and executing RAM images. RAM images are volatile and must be re-downloaded after each V_{DD} power cycle, but will remain valid during reset and V_{EE} power events. Contact Linear Technology for code download procedures and RAM images.

APPLICATIONS INFORMATION

SERIAL DIGITAL INTERFACE

Overview

The LTC4270/LTC4271 communicates with the host using a standard SMBus/I^{2}C 2-wire interface. The LTC4270/LTC4271 is a slave-only device, and communicates with the host master using the standard SMBus protocols. Interrupts are signaled to the host via the $\overline{INT}$ pin. The Timing Diagrams (Figures 5 through 9) show typical communication waveforms and their timing relationships. More information about the SMBus data protocols can be found at www.smbus.org.

The LTC4270/LTC4271 requires both the V_{DD} and V_{EE} supply rails to be present for the serial interface to function.

Bus Addressing

The LTC4270/LTC4271's primary 7-bit serial bus address is $A_6$10$A_3A_2A_1A_0$b, with bit 6 controlled by AD6 and the lower four bits set by the AD3-AD0 pins; this allows up to 10 LTC4270/LTC4271s, on a single bus. Ten LTC4270/LTC4271 are equivalent to 30 quad PSEs or 120 ports. All LTC4270/LTC4271s also respond to the broadcast address 0110000b, allowing the host to write the same command (typically configuration commands) to multiple LTC4270/LTC4271s in a single transaction. If the LTC4270/LTC4271 is asserting the $\overline{INT}$ pin, it will also respond to the alert response address (0001100b) per the SMBus specification.

Each LTC4270/LTC4271 is logically composed of three quads of four ports each. Each quad occupies separate, contiguous I^{2}C addresses. The AD6, AD3-0 pins set the address of the base quad while the remaining quads are consecutively numbered. I^{2}C addresses outside of the x10xxxxb range are considered illegal and will not respond. Each internal quad is independent of the other quads, with the exception of writes to the Chip Reset, $\overline{MSD}$ Inversion and General Purpose Input Output registers. These registers are global in nature and will affect all quads.

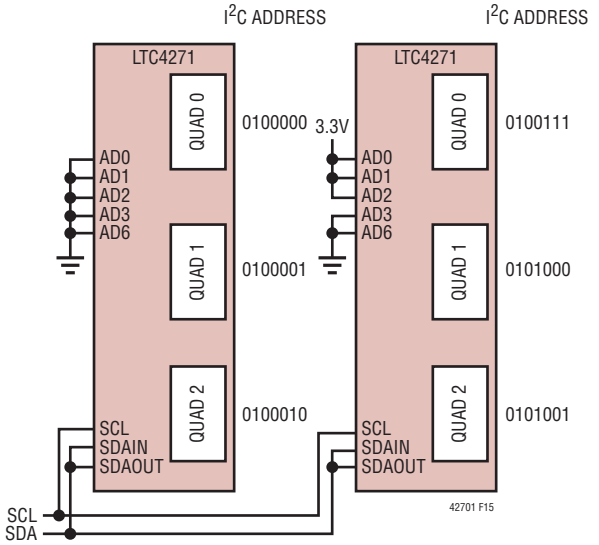

Figure 14. Example I^{2}C Bus Addressing

Interrupts and SMBAlert

Most LTC4270/LTC4271 port events can be configured to trigger an interrupt, asserting the $\overline{INT}$ pin and alerting the host to the event. This removes the need for the host to poll the LTC4270/LTC4271, minimizing serial bus traffic and conserving host CPU cycles. Multiple LTC4270/LTC4271s can share a common $\overline{INT}$ line, with the host using the SMBAlert protocol (ARA) to determine which LTC4270/LTC4271 caused an interrupt.

Register Description

For information on serial bus usage and device configuration and status, refer to the LTC4271 Software Programming documentation.

ISOLATION REQUIREMENTS

IEEE 802.3 Ethernet specifications require that network segments (including PoE circuitry) be electrically isolated from the chassis ground of each network interface device. However, network segments are not required to be isolated from each other, provided that the segments are connected to devices residing within a single building on a single power distribution system.

APPLICATIONS INFORMATION

For simple devices such as small PoE switches, the isolation requirement can be met by using an isolated main power supply for the entire device. This strategy can be used if the device has no electrically conducting ports other than twisted-pair Ethernet. In this case, the SDAIN and SDAOUT pins can be tied together and will act as a standard I^2C/SMBus SDA pin.

If the device is part of a larger system, contains additional external non-Ethernet ports, or must be referenced to protective ground for some other reason, the Power over Ethernet subsystem must be electrically isolated from the rest of the system.

The LTC4270/LTC4271 chipset simplifies PSE isolation by allowing the LTC4271 chip to reside on the non-isolated side. There it can receive power from the main logic supply and connect directly to the I^2C/SMBus bus. Isolation between the LTC4271 and LTC4270 is implemented using a proprietary transformer-based communication protocol. Additional details are provided in the Serial Bus Isolation section of this data sheet.

EXTERNAL COMPONENT SELECTION

Power Supplies and Bypassing

The LTC4270/LTC4271 requires two supply voltages to operate. V_{DD} requires 3.3V (nominally) relative to DGND. V_{EE} requires a negative voltage of between –44V and –57V for Type 1 PSEs, –50V to –57V for Type 2 PSEs, or –54.75V to –57V for LTPoE++ PSEs, relative to AGND.

Digital Power Supply

V_{DD} provides digital power for the LTC4271 processor, and draws a maximum of 15mA. A ceramic decoupling cap of at least 0.1µF should be placed from V_{DD} to DGND, as close as practical to each LTC4271 chip. A 1.8V core voltage supply is generated internally and requires a 1µF ceramic decoupling cap between the CAP1 pin and DGND.

In the LTC4270/LTC4271, V_{DD} should be delivered by the host controller's non-isolated 3.3V supply. To maintain required isolation AGND and DGND must not be connected in any way.

Main PoE Power Supply

V_{EE} is the main isolated PoE supply that provides power to the PDs. Because it supplies a relatively large amount of power and is subject to significant current transients, it requires more design care than a simple logic supply. For minimum IR loss and best system efficiency, set V_{EE} near maximum amplitude (57V), leaving enough margin to account for transient over or undershoot, temperature drift, and the line regulation specifications of the particular power supply used.

Bypass capacitance between AGND and V_{EE} is very important for reliable operation. If a short circuit occurs at one of the output ports it can take as long as 1µs for the LTC4270 to begin regulating the current. During this time the current is limited only by the small impedances in the circuit and a high current spike typically occurs, causing a voltage transient on the V_{EE} supply and possibly causing the LTC4270/LTC4271 to reset due to a UVLO fault. A 1µF, 100V X7R capacitor placed near the V_{EE} pin along with an electrolytic bulk capacitor of at least 47µF is recommended to minimize spurious resets.

Serial Bus Isolation

The LTC4270/LTC4271 chipset uses transformers to isolate the LTC4271 from the LTC4270. In this case, the SDAIN and SDAOUT pins can be shorted to each other and tied directly to the I^2C/SMBus bus. The transformers should be 10BASE-T or 10/100BASE-T with a 1:1 turns ratio. It is important that the selected transformers do not have common-mode chokes. These transformers typically provide 1500V of isolation between the LTC4271 and the LTC4270. For proper operation strict layout guidelines must be met.

APPLICATIONS INFORMATION

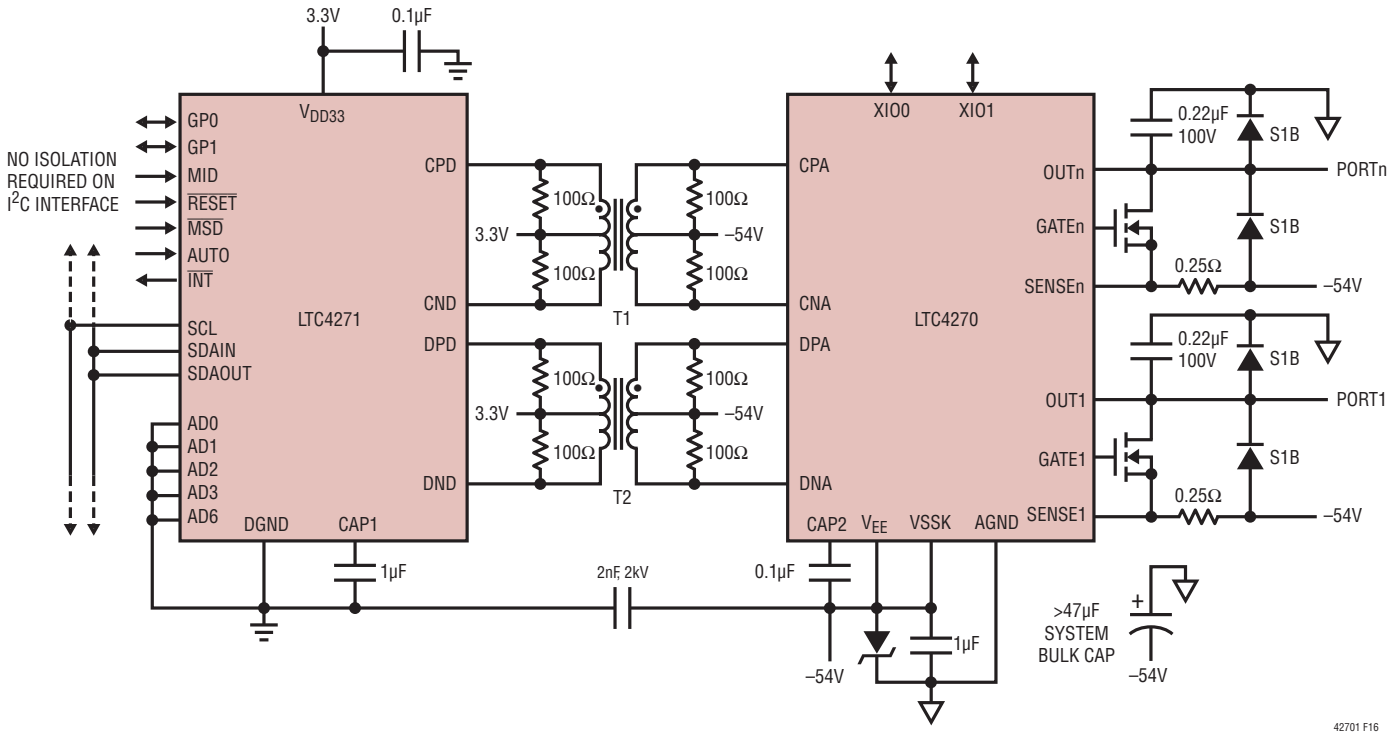

Figure 15. LTC4270/LTC4271 Proprietary Isolation

External MOSFET

Careful selection of the power MOSFET is critical to system reliability. LTC recommends either Fairchild IRFM120A, FDT3612, FDMC3612 or Philips PHT6NQ10T for their proven reliability in Type 1 and Type 2 PSE applications. SOA curves are not a reliable specification for MOSFET selection. Contact LTC Applications before using a MOSFET other than one of these recommended parts.

Sense Resistor

The LTC4270/LTC4271 is designed to use 0.25Ω current sense resistors to reduce power dissipation. Four commonly available 1Ω resistors (sized according to power dissipation) can be used in parallel in place of a single 0.25Ω resistor. In order to meet the I_{CUT} and I_{LIM} accuracy required by the IEEE specification, the sense resistors should have ±1% tolerance or better, and no more than ±200ppm/°C temperature coefficient. In addition, the sense resistors must meet strict layout guidelines.

Port Output Cap

Each port requires a 0.22µF cap across its outputs to keep the LTC4270 stable while in current limit during startup or overload. Common ceramic capacitors often have significant voltage coefficients; this means the capacitance is reduced as the applied voltage increases. To minimize this problem, X7R ceramic capacitors rated for at least 100V are recommended and must be located close to the PSE.

APPLICATIONS INFORMATION

ESD/Cable Discharge Protection

Ethernet ports can be subject to significant ESD events when long data cables, each potentially charged to thousands of volts, are plugged into the low impedance of the RJ45 jack. To protect against damage, each port requires a pair of clamp diodes; one to AGND and one to V_{EE} (Figure 16). An additional surge suppressor is required for each LTC4270 chip from V_{EE} to AGND. The diodes at the ports steer harmful surges into the supply rails, where they are absorbed by the surge suppressor and the V_{EE} bypass capacitance. The surge suppressor has the additional benefit of protecting the LTC4270 from transients on the V_{EE} supply.

S1B diodes work well as port clamp diodes, and an SMAJ58A or equivalent is recommended for the V_{EE} surge suppressor.

LAYOUT GUIDELINES

Strict adherence to board layout, parts placement and routing guidelines is critical for optimal current reading accuracy, IEEE compliance, system robustness, and thermal dissipation. Refer to the DC1682A Demo Board as a layout reference. Contact LTC Applications to obtain a full set of layout guidelines, example layouts and BOMs.

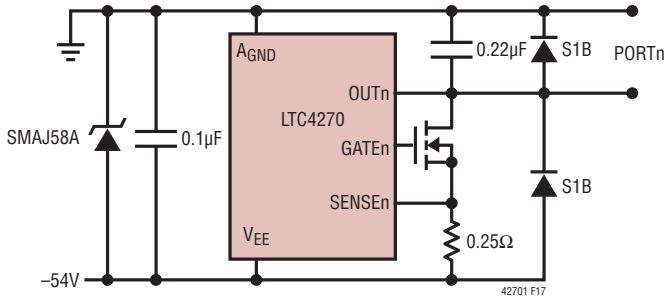

Figure 16. LTC4270 Discharge Protection

TYPICAL APPLICATION

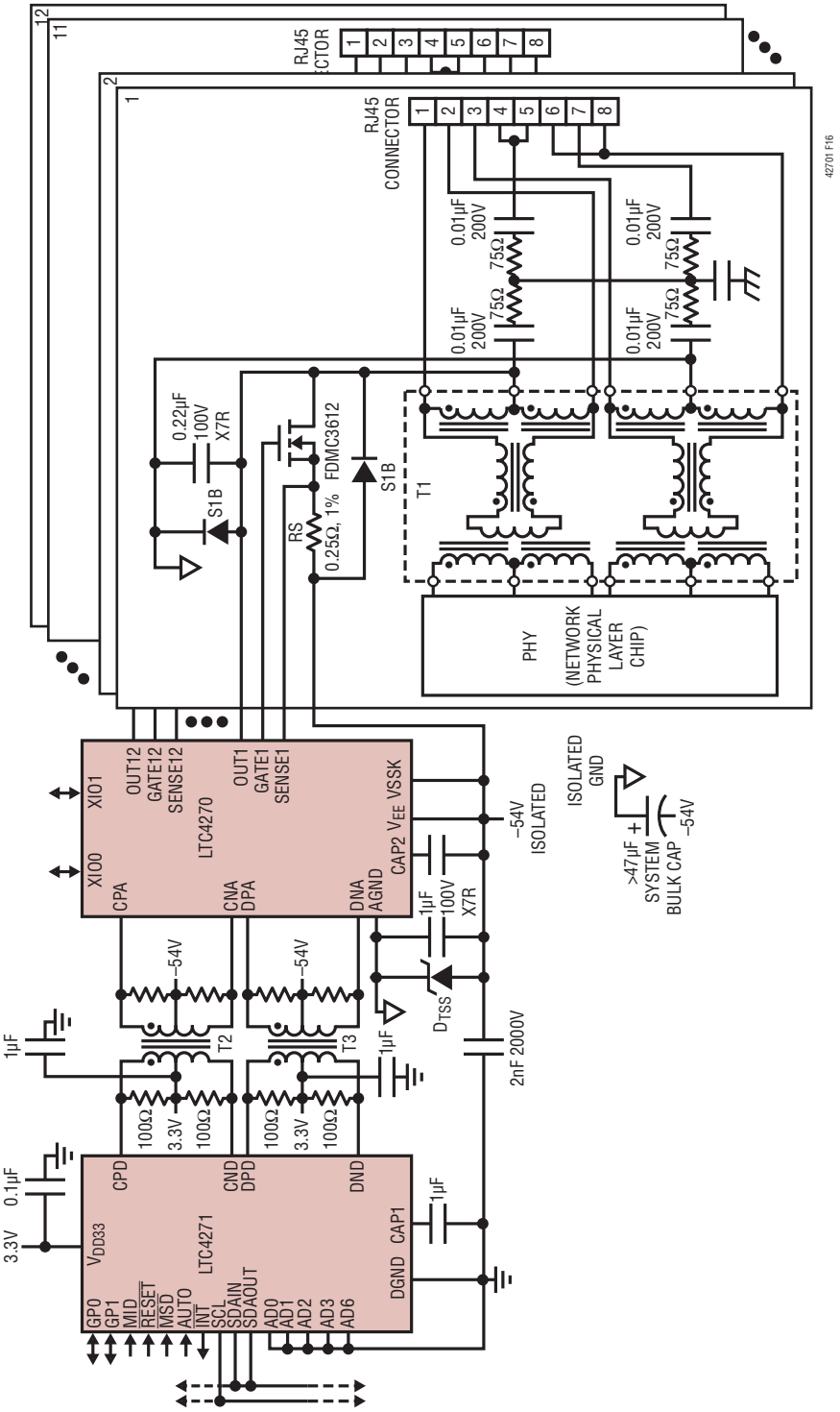

PACKAGE DESCRIPTION

UF Package
24-Lead Plastic QFN (4mm × 4mm)
(Reference LTC DWG # 05-08-1697)

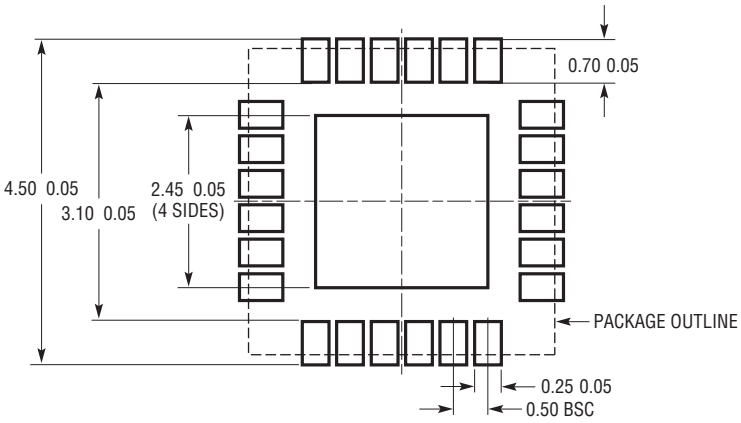

RECOMMENDED SOLDER PAD PITCH AND DIMENSIONS

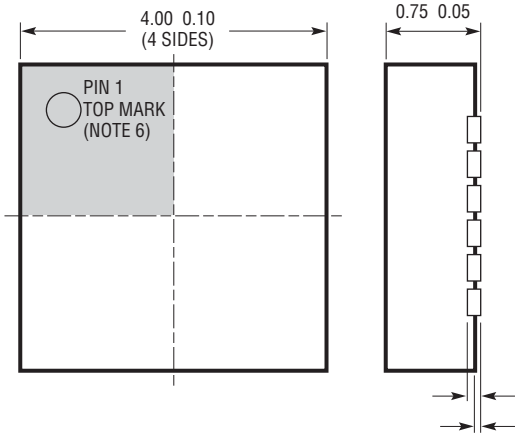

BOTTOM VIEW—EXPOSED PAD

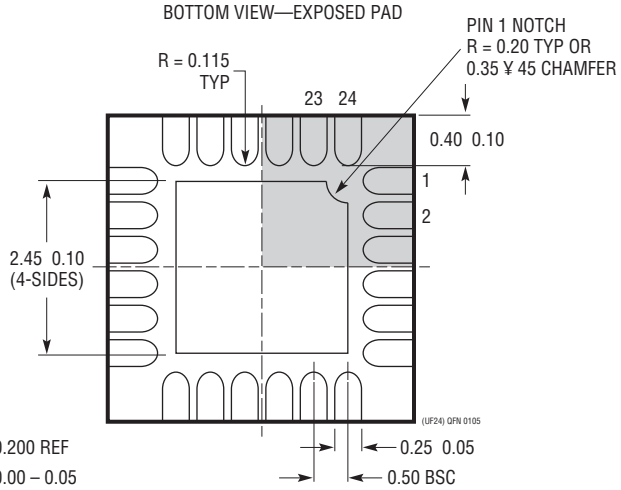

NOTE:
1. DRAWING PROPOSED TO BE MADE A JEDEC PACKAGE OUTLINE MO-220 VARIATION (WGGD-X)—TO BE APPROVED
2. DRAWING NOT TO SCALE
3. ALL DIMENSIONS ARE IN MILLIMETERS
4. DIMENSIONS OF EXPOSED PAD ON BOTTOM OF PACKAGE DO NOT INCLUDE MOLD FLASH. MOLD FLASH, IF PRESENT, SHALL NOT EXCEED 0.15mm ON ANY SIDE, IF PRESENT
5. EXPOSED PAD SHALL BE SOLDER PLATED
6. SHADED AREA IS ONLY A REFERENCE FOR PIN 1 LOCATION ON THE TOP AND BOTTOM OF PACKAGE

PACKAGE DESCRIPTION

UKG Package
52-Lead Plastic QFN (7mm × 8mm)
(Reference LTC DWG # 05-08-1729 Rev Ø)

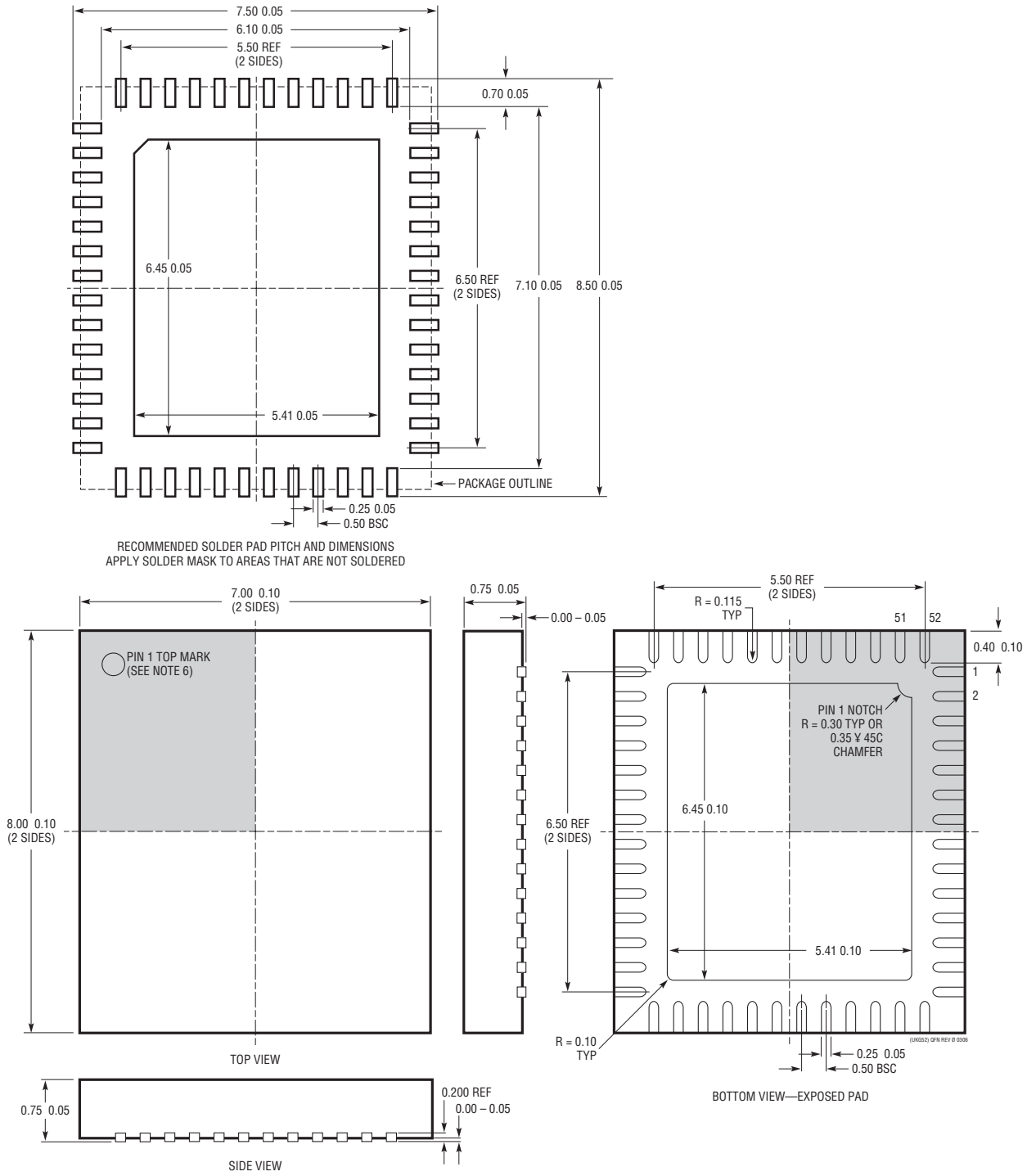

NOTE:
1. DRAWING IS NOT A JEDEC PACKAGE OUTLINE
2. DRAWING NOT TO SCALE
3. ALL DIMENSIONS ARE IN MILLIMETERS
4. DIMENSIONS OF EXPOSED PAD ON BOTTOM OF PACKAGE DO NOT INCLUDE MOLD FLASH. MOLD FLASH, IF PRESENT, SHALL NOT EXCEED 0.20mm ON ANY SIDE, IF PRESENT
5. EXPOSED PAD SHALL BE SOLDER PLATED
6. SHADED AREA IS ONLY A REFERENCE FOR PIN 1 LOCATION ON THE TOP AND BOTTOM OF PACKAGE

Information furnished by Linear Technology Corporation is believed to be accurate and reliable. However, no responsibility is assumed for its use. Linear Technology Corporation makes no representation that the interconnection of its circuits as described herein will not infringe on existing patent rights.

TYPICAL APPLICATION

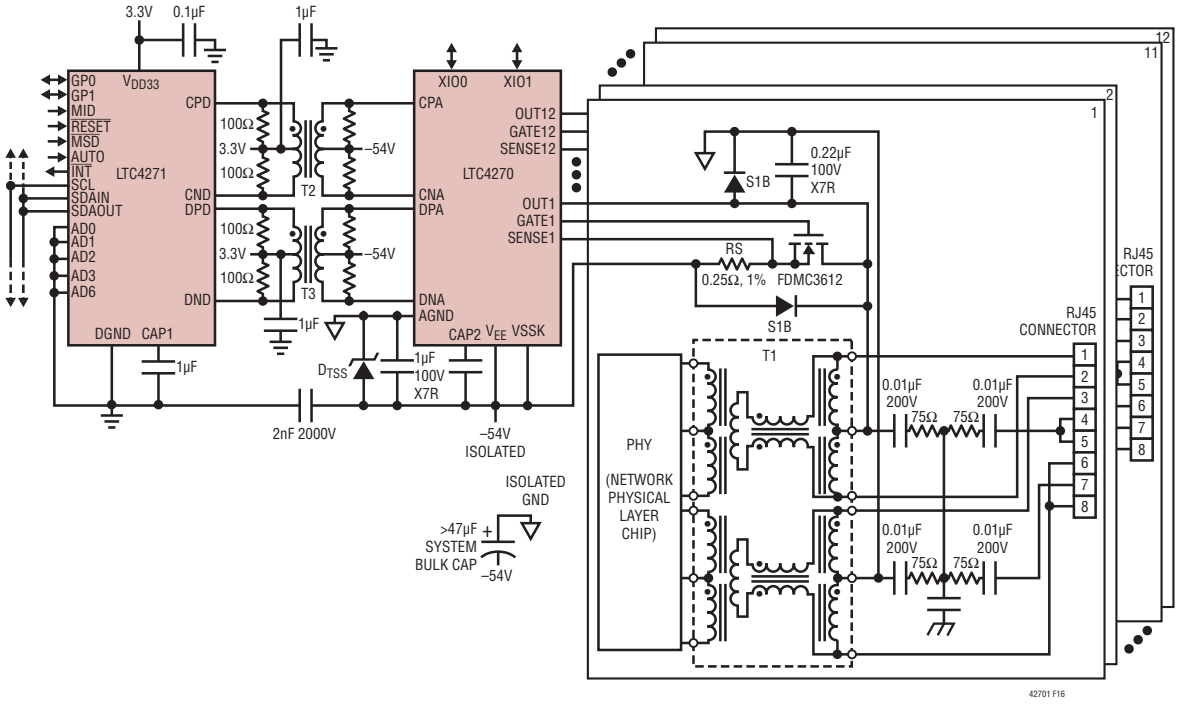

RELATED PARTS

PART NUMBER	DESCRIPTION	COMMENTS
LTC4257-1	IEEE 802.3af PD Interface Controller	Internal 100V, 400mA Switch, Dual Current Limit, Programmable Class
LTC4263	Single IEEE 802.3af PSE Controller	Internal FET Switch
LTC4263-1	High Power Single PoE PSE Controller	With Internal FET Switch
LTC4265	IEEE 802.3at PD Interface Controller	Internal 100V, 1A Switch, 2-Event Classification Recognition
LTC4266	Quad IEEE 802.3at PoE PSE Controller	With Programmable CUT/LIM, 2-Event Classification, and Port Current and Voltage Monitoring
LTC4267	IEEE 802.3af PD Interface With Integrated Switching Regulator	Internal 100V, 400mA Switch, Dual Inrush Current, Programmable Class
LTC4267-1	IEEE 802.3af PD Interface With Integrated Switching Regulator	Internal 100V, 400mA Switch, Programmable Class, 200kHz Constant Frequency PWM
LTC4267-3	IEEE 802.3af PD Interface With Integrated Switching Regulator	Internal 100V, 400mA Switch, Programmable Class, 300kHz Constant Frequency PWM
LTC4269-1	IEEE 802.3af PD Interface With Integrated Flyback Switching Regulator	2-Event Classification, Programmable Class, Synchronous No-Opto Flyback Controller, 50kHz to 250kHz, Aux Support
LTC4269-2	IEEE 802.3af PD Interface With Integrated Forward Switching Regulator	2-Event Classification, Programmable Class, Synchronous Forward Controller, 100kHz to 500kHz, Aux Support
LTC4272	Single-chip 12-port IEEE 802.3at PoE PSE Controller	With Programmable CUT/LIM, 2-Event Class, and Port Current and Voltage Monitoring
LTC4278	IEEE 802.3af PD Interface With Integrated Flyback Switching Regulator	2-Event Classification, Programmable Class, Synchronous No-Opto Flyback Controller, 50kHz to 250kHz, 12V Aux Support
LTC4274	Single IEEE 802.3at PoE PSE Controller	With Programmable CUT/LIM, 2-Event Classification, and Port Current and Voltage Monitoring
LTC4311	SMBus/ I²C Accelerator	Improved I²C Rise Time, Ensures Data Integrity

Linear Technology Corporation
1630 McCarthy Blvd., Milpitas, CA 95035-7417
(408) 432-1900 • FAX: (408) 434-0507 • www.linear.com
LT 0411 • PRINTED IN USA
© LINEAR TECHNOLOGY CORPORATION 2011