Wireless Power Receiver and 400mA Buck Battery Charger

FEATURES

- **Dynamic Harmonization Control Optimizes Wireless Charging Over a Wide Coupling Range**
- **Wide Input Voltage Range (12.5V to 40V)**
- **Adjustable Float Voltage (3.5V to 11V)**
- **Fixed 4.2V Float Voltage Option (LTC4120-4.2)**
- 50mA to 400mA Charge Current Programmed with a Single Resistor
- ±1% Feedback Voltage Accuracy
- Programmable 5% Accurate Charge Current
- No Microprocessor Required
- No Transformer Core
- Thermally Enhanced, Low Profile 16-Lead (3mm × 3mm × 0.75mm) QFN Package

APPLICATIONS

- Handheld Instruments
- Industrial/Military Sensors and Devices
- Harsh Environments
- Portable Medical Devices
- Physically Small Devices
- Electrically Isolated Devices

All registered trademarks and trademarks are the property of their respective owners.

DESCRIPTION

The LTC®4120 is a constant-current/constant-voltage wireless receiver and battery charger. An external programming resistor sets the charge current up to 400mA. The LTC4120-4.2 is suitable for charging Li-Ion/Polymer batteries, while the programmable float voltage of the LTC4120 accommodates several battery chemistries. The LTC4120 uses a Dynamic Harmonization Control (DHC) technique that allows high efficiency contactless charging across an air gap.

The LTC4120 regulates its input voltage via the DHC pin. This technique modulates the resonant frequency of a receiver tank to automatically adjust the power received as well as the power transmitted to provide an efficient solution for wirelessly charging battery-powered devices.

Wireless charging with the LTC4120 provides a method to power devices in harsh environments without requiring expensive failure-prone connectors. This allows products to be charged while locked within sealed enclosures, or in moving or rotating equipment, or where cleanliness or sanitation is critical.

This full featured battery charger includes accurate RUN pin threshold, low voltage battery preconditioning and bad battery fault detection, timer termination, auto-recharge, and NTC temperature qualified charging. The $\overline{\text{FAULT}}$ pin provides an indication of bad battery or temperature faults.

Once charging is terminated, the LTC4120 signals end-of-charge via the $\overline{\text{CHRG}}$ pin, and enters a low current sleep mode. An auto-restart feature starts a new charging cycle if the battery voltage drops by 2.2%.

TYPICAL APPLICATION

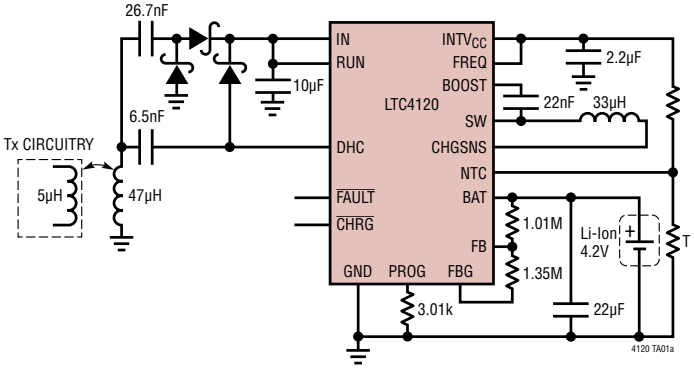

Wireless Rx Voltage/Charge Current vs Spacing

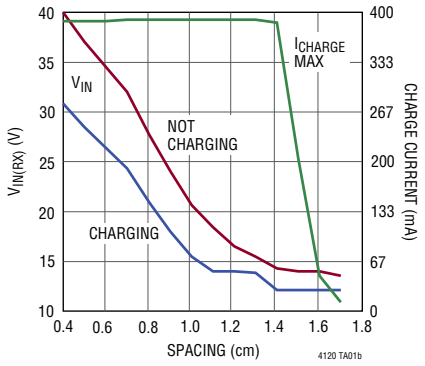

Rev. G

ABSOLUTE MAXIMUM RATINGS (Note 1)

IN, RUN, $\overline{CHRG}$, $\overline{FAULT}$, DHC ..... –0.3V to 43V
BOOST ..... V_{SW} – 0.3V to (V_{SW} + 6V)
SW (DC) ..... –0.3V to (V_{IN} + 0.3V)
SW (Pulsed <100ns) ..... –1.5V to (V_{IN} + 1.5V)
CHGSNS, BAT, FBG, FB ..... –0.3V to 12V
FREQ, NTC, PROG, $INTV_{CC}$ ..... –0.3V to 6V
I_{CHGSNS}, I_{BAT} ..... ±600mA
I_{DHC} ..... $350mA_{RMS}$
$I_{\overline{CHRG}}$, $I_{\overline{FAULT}}$, I_{FBG} ..... ±5mA
I_{FB} ..... ±5mA
I_{INTVCC} ..... –5mA
Operating Junction Temperature Range
(Note 2) ..... –40°C to 125°C
Storage Temperature Range ..... –65°C to 150°C

PIN CONFIGURATION

LTC4120

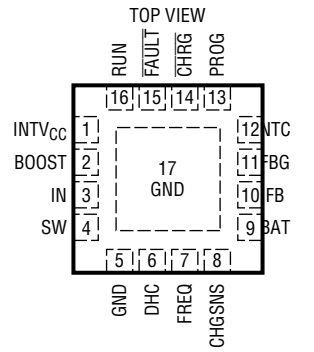

UD PACKAGE
16-LEAD (3mm × 3mm) PLASTIC QFN
T_{JMAX} = 125°C, θ_{JA} = 54°C/W
EXPOSED PAD (PIN 17) IS GND, MUST BE SOLDERED TO PCB TO OBTAIN θ_{JA}

LTC4120-4.2

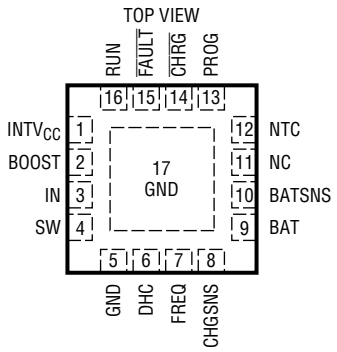

UD PACKAGE
16-LEAD (3mm × 3mm) PLASTIC QFN
T_{JMAX} = 125°C, θ_{JA} = 54°C/W
EXPOSED PAD (PIN 17) IS GND, MUST BE SOLDERED TO PCB TO OBTAIN θ_{JA}

ORDER INFORMATION

LEAD FREE FINISH	TAPE AND REEL	PART MARKING*	PACKAGE DESCRIPTION	TEMPERATURE RANGE
LTC4120EUD#PBF	LTC4120EUD#TRPBF	LGHB	16-Lead (3mm × 3mm) Plastic QFN	–40°C to 125°C
LTC4120IUD#PBF	LTC4120IUD#TRPBF	LGHB	16-Lead (3mm × 3mm) Plastic QFN	–40°C to 125°C
LTC4120EUD-4.2#PBF	LTC4120EUD-4.2#TRPBF	LGMT	16-Lead (3mm × 3mm) Plastic QFN	–40°C to 125°C
LTC4120IUD-4.2#PBF	LTC4120IUD-4.2#TRPBF	LGMT	16-Lead (3mm × 3mm) Plastic QFN	–40°C to 125°C

Contact the factory for parts specified with wider operating temperature ranges. *The temperature grade is identified by a label on the shipping container.

Tape and reel specifications. Some packages are available in 500 unit reels through designated sales channels with #TRMPBF suffix.

LTC4120 OPTIONS	FLOAT VOLTAGE
LTC4120	Programmable
LTC4120-4.2	4.2V Fixed

ELECTRICAL CHARACTERISTICS

The ● denotes the specifications which apply over the specified operating junction temperature range, otherwise specifications are at T_A = 25°C (Note 2). V_{IN} = V_{RUN} = 15V, V_{CHGSNS} = V_{BAT} = 4V, R_{PROG} = 3.01k, V_{FB} = 2.29V (LTC4120), V_{BATSNS} = 4V (LTC4120-4.2). Current into a pin is positive out of the pin is negative.

SYMBOL	PARAMETER	CONDITIONS		MIN	TYP	MAX	UNITS
	Operating Input Supply Range		●	12.5		40	V
	Battery Voltage Range			0		11	V
I_{IN}	DC Supply Current	Switching, FREQ = GND			3.5		mA
		Standby Mode (Note 3)	●		130	220	µA
		Sleep Mode (Note 3) LTC4120: V_{FB} = 2.51V (Note 5), LTC4120-4.2: V_{BATSNS} = 4.4V	●		60	100	µA
		Disabled Mode (Note 3)	●		37	70	µA
		Shutdown Mode (Note 3)	●		20	40	µA
ΔV_{DUVLO}	Differential Undervoltage Lockout	V_{IN}-V_{BAT} Falling, V_{IN} = 5V (LTC4120), V_{IN}-V_{BATSNS} Falling, V_{IN} = 5V (LTC4120-4.2)	●	20	80	160	mV
	Hysteresis	V_{IN}-V_{BAT} Rising, V_{IN} = 5V (LTC4120), V_{IN}-V_{BATSNS} Rising, V_{IN} = 5V (LTC4120-4.2)			115		mV
UV_{INTVCC}	$INTV_{CC}$ Undervoltage Lockout	$INTV_{CC}$ Rising, V_{IN} = $INTV_{CC}$ + 100mV, V_{BAT} = NC	●	4.00	4.15	4.26	V
	Hysteresis	$INTV_{CC}$ Falling (Note 4)			220		mV
Battery Charger							
I_{BAT}	BAT Standby Current	Standby Mode (LTC4120) (Notes 3, 7, 8) Standby Mode (LTC4120-4.2) (Notes 3, 7, 8)	● ●		2.5 50	4.5 1000	µA nA
	BAT Shutdown Current	Shutdown Mode (LTC4120) (Notes 3, 7, 8) Shutdown Mode (LTC4120-4.2) (Notes 3, 7, 8)	● ●		1100 10	2000 1000	nA nA
I_{BATSNS}	BATSNS Standby Current (LTC4120-4.2)	Standby Mode (Notes 3, 7, 8)	●		5.4	10	µA
	BATSNS Shutdown Current (LTC4120-4.2)	Shutdown Mode (Notes 3, 7, 8)	●		1100	2000	nA
I_{FB}	Feedback Pin Bias Current (LTC4120)	V_{FB} = 2.5V (Notes 5, 7)	●		25	60	nA
$I_{FBG(LEAK)}$	Feedback Ground Leakage Current (LTC4120)	Shutdown Mode (Notes 3, 7)	●			1	µA
R_{FBG}	Feedback Ground Return Resistance (LTC4120)		●		1000	2000	Ω
$V_{FB(REG)}$	Feedback Regulation Voltage (LTC4120)	(Note 5)	 ●	2.393 2.370	2.400	2.407 2.418	V V
V_{FLOAT}	Regulated Float Voltage (LTC4120-4.2)		 ●	4.188 4.148	4.200	4.212 4.227	V V
I_{CHG}	Battery Charge Current	R_{PROG} = 3.01k R_{PROG} = 24.3k	● ●	383 45	402 50	421 55	mA mA
V_{UVCL}	Undervoltage Current Limit	V_{IN} Falling			12.0		V
V_{RCHG}	Battery Recharge Threshold	V_{FB} Falling Relative to V_{FB_REG} (LTC4120) (Note 5)	●	–38	–50	–62	mV
$V_{RCHG_4.2}$	Battery Recharge Threshold	V_{BATSNS} Falling Relative to V_{FLOAT} (LTC4120-4.2)	●	–70	–92	–114	mV
h_{PROG}	Ratio of BAT Current to PROG Current	V_{TRKL} < V_{FB} < $V_{FB(REG)}$ (LTC4120) (Note 5) $V_{TRKL_4.2}$ < V_{BATSNS} < V_{FLOAT} (LTC4120-4.2)			988		mA/mA
V_{PROG}	PROG Pin Servo Voltage		●	1.206	1.227	1.248	V
R_{SNS}	CHGSNS-BAT Sense Resistor	I_{BAT} = –100mA			300		mΩ

ELECTRICAL CHARACTERISTICS

The ● denotes the specifications which apply over the specified operating junction temperature range, otherwise specifications are at T_A = 25°C (Note 2). V_{IN} = V_{RUN} = 15V, V_{CHGSNS} = V_{BAT} = 4V, R_{PROG} = 3.01k, V_{FB} = 2.29V (LTC4120), V_{BATSNS} = 4V (LTC4120-4.2). Current into a pin is positive out of the pin is negative.

SYMBOL	PARAMETER	CONDITIONS		MIN	TYP	MAX	UNITS
I_{LOWBAT}	Low Battery Linear Charge Current	0V < V_{FB} < V_{TRKL}, V_{BAT} = 2.6V (LTC4120), V_{BATSNS} < $V_{TRKL_4.2}$, V_{BAT} = 2.6V (LTC4120-4.2)		6	9	16	mA
V_{LOWBAT}	Low Battery Threshold Voltage	V_{BAT} Rising (LTC4120), V_{BATSNS} Rising (LTC4120-4.2)	●	2.15	2.21	2.28	V
		Hysteresis			147		mV
I_{TRKL}	Switch Mode Trickle Charge Current	V_{LOWBAT} < V_{BAT}, V_{FB} < V_{TRKL} (LTC4120) (Note 5), V_{LOWBAT} < V_{BATSNS} < $V_{TRKL_4.2}$ (LTC4120-4.2)			I_{CHG}/10		mA
	PROG Pin Servo Voltage in Switch Mode Trickle Charge	V_{LOWBAT} < V_{BAT}, V_{FB} < V_{TRKL} (LTC4120) (Note 5), V_{LOWBAT} < V_{BATSNS} < $V_{TRKL_4.2}$ (LTC4120-4.2)			122		mV
V_{TRKL}	Trickle Charge Threshold	V_{FB} Rising (LTC4120) (Note 5)	●	1.64	1.68	1.71	V
	Hysteresis	V_{FB} Falling (LTC4120) (Note 5)			50		mV
$V_{TRKL_4.2}$	Trickle Charge Threshold	V_{BATSNS} Rising (LTC4120-4.2)	●	2.86	2.91	2.98	V
	Hysteresis	V_{BATSNS} Falling (LTC4120-4.2)			88		mV
$h_{C/10}$	End of Charge Indication Current Ratio	(Note 6)			0.1		mA/mA
	Safety Timer Termination Period			1.3	2.0	2.8	Hours
	Bad Battery Termination Timeout			19	30	42	Minutes
Switcher							
f_{OSC}	Switching Frequency	FREQ = $INTV_{CC}$ FREQ = GND	● ●	1.0 0.5	1.5 0.75	2.0 1.0	MHz MHz
$t_{MIN(ON)}$	Minimum Controllable On-Time	(Note 9)			120		ns
	Duty Cycle Maximum	(Note 9)		94			%
	Top Switch $R_{DS(ON)}$	I_{SW} = –100mA			0.8		Ω
	Bottom Switch $R_{DS(ON)}$	I_{SW} = 100mA			0.5		Ω
I_{PEAK}	Peak Current Limit	Measured Across R_{SNS} with a 15µH Inductor in Series with R_{SNS} (Note 9)		585	750	1250	mA
I_{SW}	Switch Pin Current (Note 8)	V_{IN} = Open-Circuit, V_{RUN} = 0V, V_{SW} = 8.4V (LTC4120) V_{IN} = Open-Circuit, V_{RUN} = 0V, V_{SW} = 4.2V (LTC4120-4.2)	● ●		15 7	30 15	µA µA
Status Pins $\overline{FAULT}$, $\overline{CHRG}$							
	Pin Output Voltage Low	I = 2mA				500	mV
	Pin Leakage Current	V = 43V, Pin High Impedance			0	1	µA
NTC							
	Cold Temperature V_{NTC}/V_{INTVCC} Fault	Rising V_{NTC} Threshold Falling V_{NTC} Threshold	●	73	74 72	75	%$INTV_{CC}$ %$INTV_{CC}$
	Hot Temperature V_{NTC}/V_{INTVCC} Fault	Falling V_{NTC} Threshold Rising V_{NTC} Threshold	●	35.5	36.5 37.5	37.5	%$INTV_{CC}$ %$INTV_{CC}$
	NTC Disable Voltage	Falling V_{NTC} Threshold Rising V_{NTC} Threshold	●	1	2 3	3	%$INTV_{CC}$ %$INTV_{CC}$
	NTC Input Leakage Current	V_{NTC} = V_{INTVCC}		–50		50	nA

ELECTRICAL CHARACTERISTICS

The ● denotes the specifications which apply over the specified operating junction temperature range, otherwise specifications are at T_A = 25°C (Note 2). V_{IN} = V_{RUN} = 15V, V_{CHGSNS} = V_{BAT} = 4V, R_{PROG} = 3.01k, V_{FB} = 2.29V (LTC4120), V_{BATSNS} = 4V (LTC4120-4.2). Current into a pin is positive out of the pin is negative.

SYMBOL	PARAMETER	CONDITIONS		MIN	TYP	MAX	UNITS
RUN							
V_{EN}	Enable threshold	V_{RUN} Rising	●	2.35	2.45	2.55	V
	Hysteresis	V_{RUN} Falling			200		mV
	Run Pin Input Current	V_{RUN} = 40V			0.01	0.1	µA
V_{SD}	Shutdown Threshold (Note 3)	V_{RUN} Falling	●	0.4		1.2	V
	Hysteresis				220		mV
FREQ							
	FREQ Pin Input Low		●	0.4			V
	FREQ Pin Input High	V_{INTVCC}-V_{FREQ}	●			0.6	V
	FREQ Pin Input Current	0V < V_{FREQ} < V_{INTVCC}				±1	µA
Dynamic Harmonization Control							
$V_{IN(DHC)}$	Input Regulation Voltage				14		V
	DHC Pin Current	V_{DHC} = 1V, V_{IN} < $V_{IN(DHC)}$			330		mA_{RMS}

Note 1: Stresses beyond those listed under Absolute Maximum Ratings may cause permanent damage to the device. Exposure to any Absolute Maximum Rating condition for extended periods may affect device reliability and lifetime.

Note 2: The LTC4120 is tested under pulsed load conditions such that $T_J \approx T_A$. The LTC4120E is guaranteed to meet performance specifications for junction temperatures from 0°C to 85°C. Specifications over the –40°C to 125°C operating junction temperature range are assured by design, characterization and correlation with statistical process controls. The LTC4120I is guaranteed over the full –40°C to 125°C operating junction temperature range. Note that the maximum ambient temperature consistent with these specifications is determined by specific operating conditions in conjunction with board layout, the rated package thermal impedance, and other environmental factors.

Note 3: Standby mode occurs when the LTC4120 stops switching due to an NTC fault condition, or when the charge current has dropped low enough to enter Burst Mode operation. Disabled mode occurs when V_{RUN} is between V_{SD} and V_{EN}. Shutdown mode occurs when V_{RUN} is below V_{SD} or when the differential undervoltage lockout is engaged. SLEEP mode occurs after a timeout while the battery voltage remains above the V_{RCHG} or V_{RCHG_42} threshold.

Note 4: The internal supply $INTV_{CC}$ should only be used for the NTC divider, it should not be used for any other loads.

Note 5: The FB pin is measured with a resistance of 588k in series with the pin.

Note 6: $h_{C/10}$ is expressed as a fraction of measured full charge current as measured at the PROG pin voltage when the $\overline{CHRG}$ pin de-asserts.

Note 7: In an application circuit with an inductor connected from SW to CHGSNS, the total battery leakage current when disabled is the sum of I_{BAT}, $I_{FBG(LEAK)}$ and I_{SW} (LTC4120), or I_{BATSNS} and I_{BAT} and I_{SW} (LTC4120-4.2).

Note 8: When no supply is present at IN, the SW powers IN through the body diode of the topside switch. This may cause additional SW pin current depending on the load present at IN.

Note 9: Guaranteed by design and/or correlation to static test.

TYPICAL PERFORMANCE CHARACTERISTICS

T_A = 25°C, unless otherwise noted.

Typical $V_{FB(REG)}$ vs Temperature

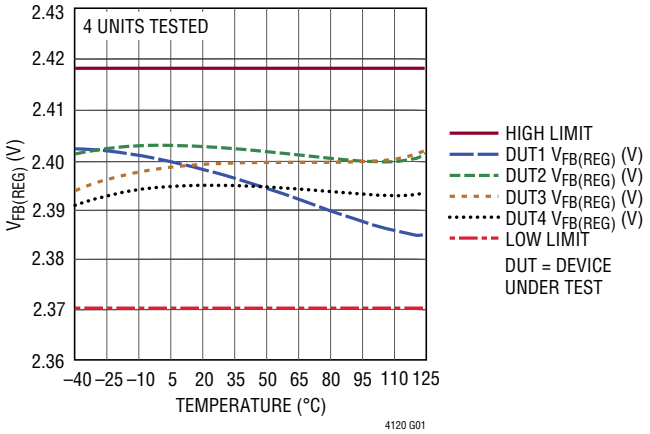

Typical V_{FLOAT} vs Temperature LTC4120-4.2

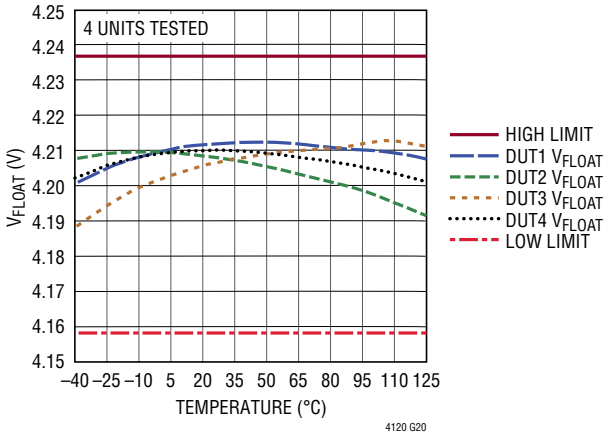

IN Pin Standby/Sleep Current vs Temperature

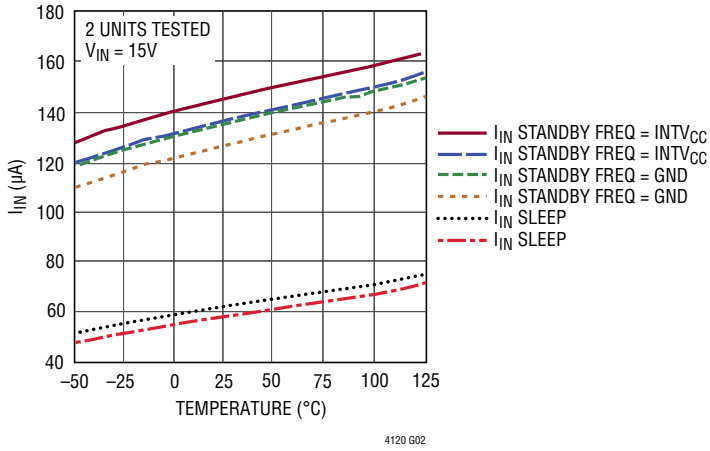

IN Pin Disabled/Shutdown Current vs Temperature

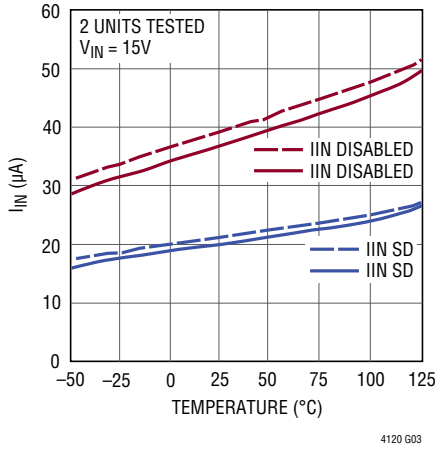

BAT Pin Sleep/Shutdown Current vs Temperature

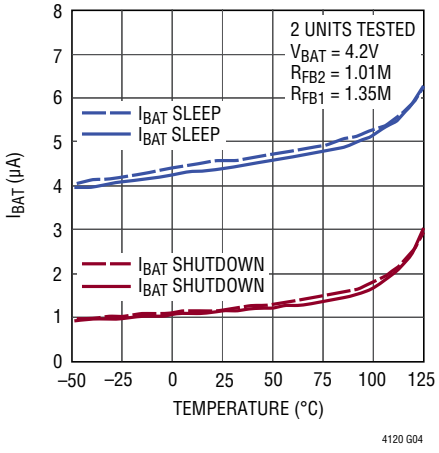

Typical Battery Charge Current vs Temperature

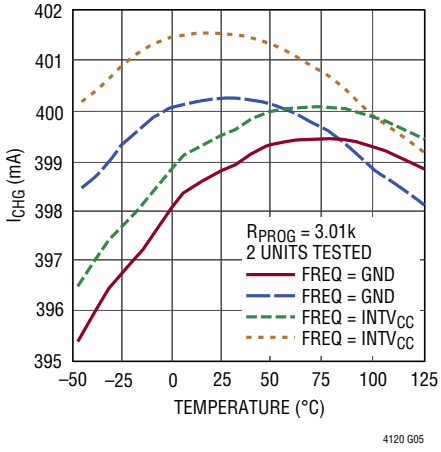

Typical R_{SNS} Current Limit vs Temperature

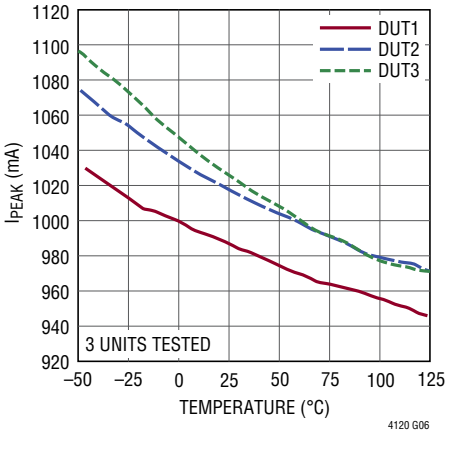

TYPICAL PERFORMANCE CHARACTERISTICS

T_A = 25°C, unless otherwise noted.

Switching Frequency vs Temperature

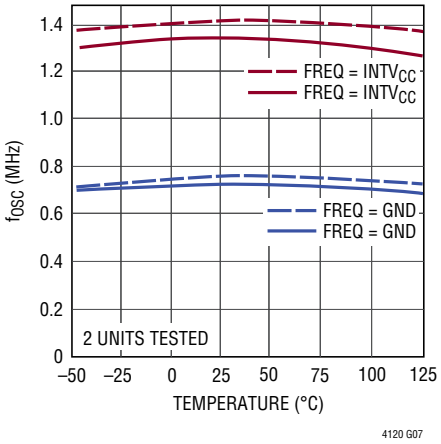

Buck Efficiency vs Battery Current

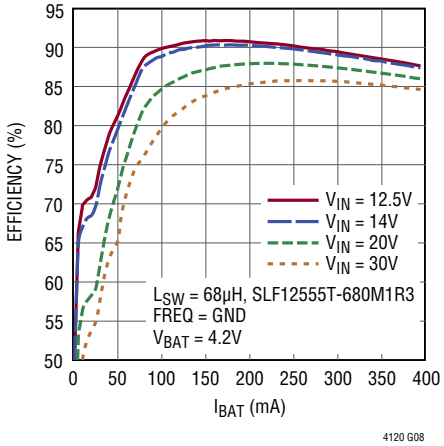

BAT Pin Leakage Current/V_{BAT}-V_{IN} vs Temperature

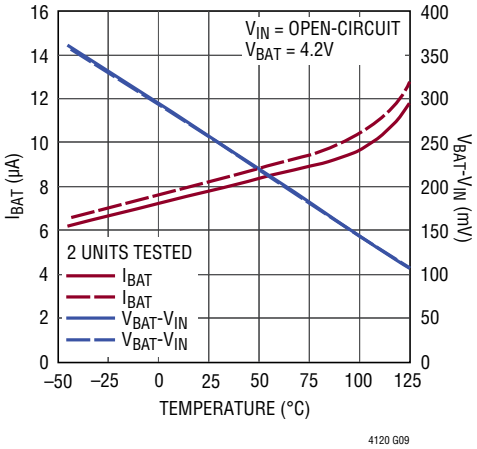

Typical $t_{MIN(ON)}$ vs Temperature

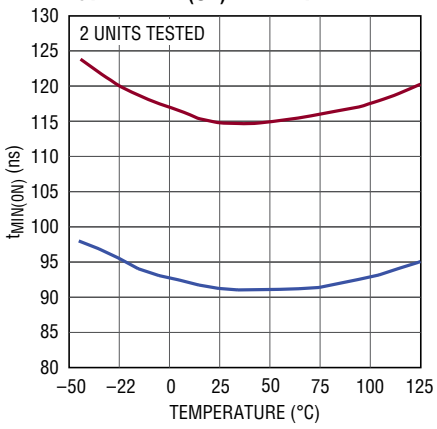

Wireless Power Transfer Efficiency, V_{IN_RX} vs Battery Current

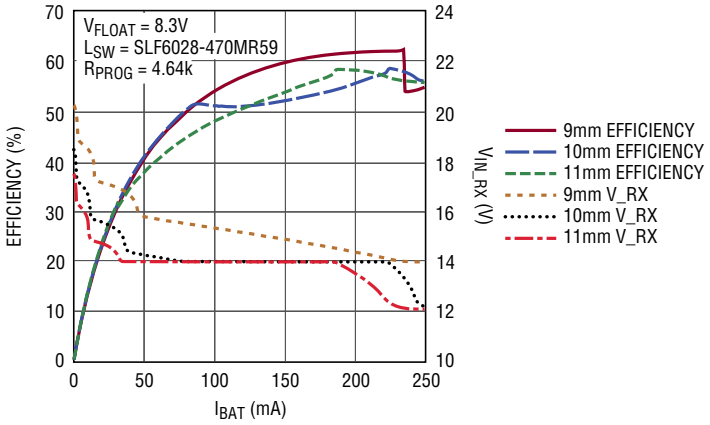

Typical Wireless Charging Cycle

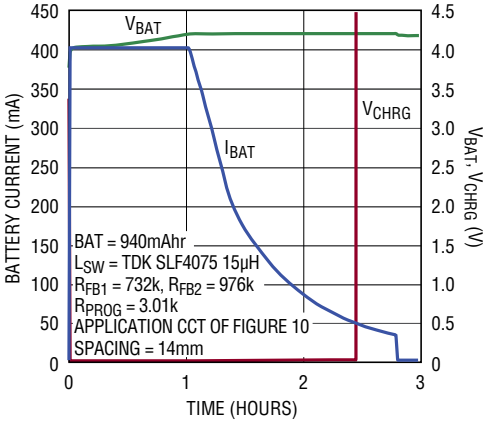

Burst Mode Trigger Current

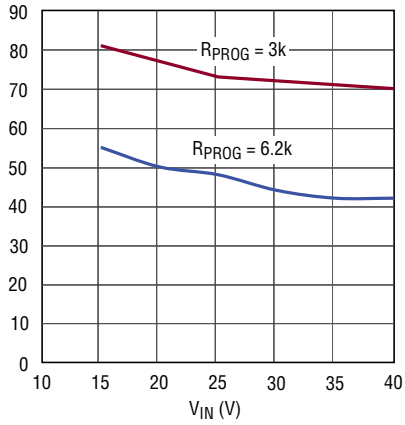

Typical Burst Mode Waveforms, I_{BAT} = 38mA

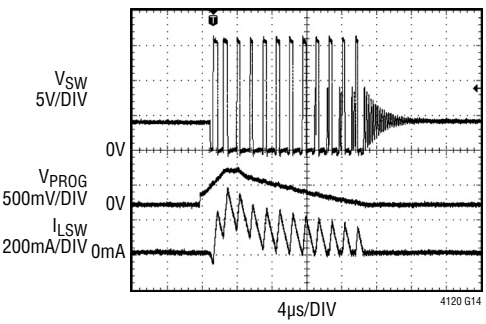

TYPICAL PERFORMANCE CHARACTERISTICS T_A = 25°C, unless otherwise noted.

IN Pin Standby Current vs V_{IN}

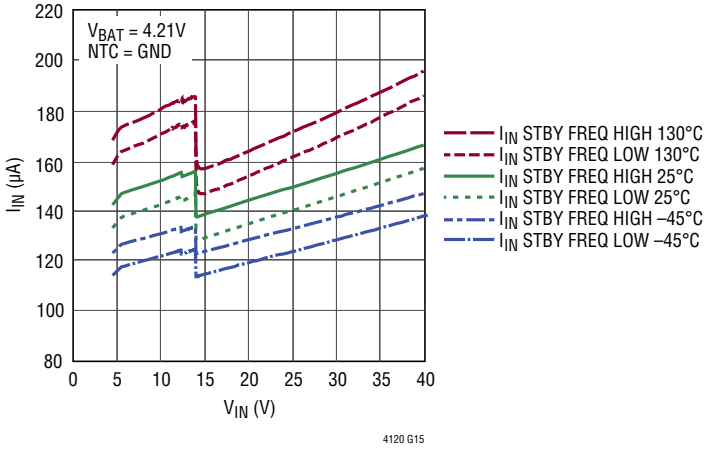

IN Pin Shutdown Current vs Input Voltage

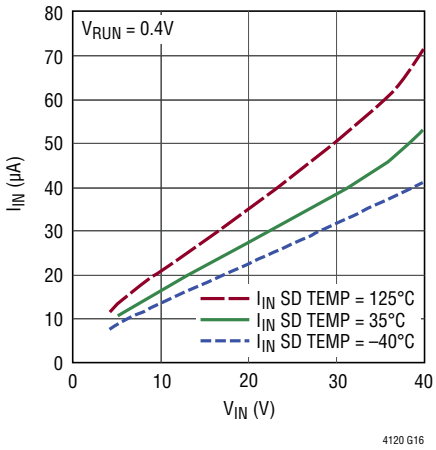

IN Pin Disabled Current vs Input Voltage

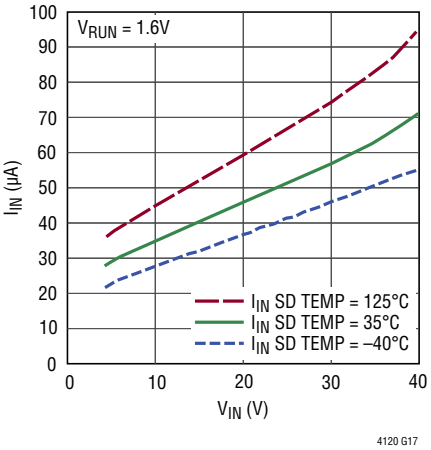

IN Pin Switching Current vs Input Voltage

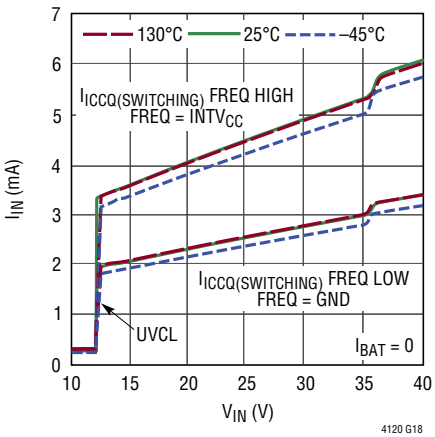

UVCL: I_{CHARGE} vs Input Voltage

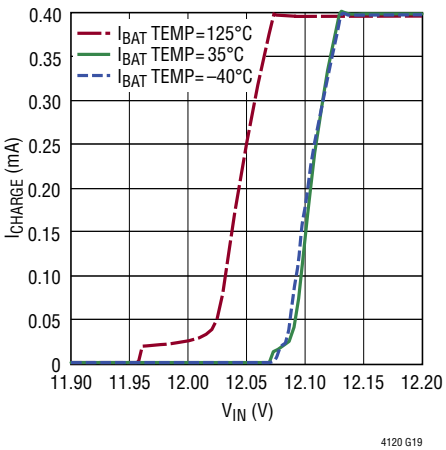

PIN FUNCTIONS

$INTV_{CC}$ (Pin 1): Internal Regulator Output Pin. This pin is the output of an internal linear regulator that generates the internal $INTV_{CC}$ supply from IN. It also supplies power to the switch gate drivers and the low battery linear charge current I_{LOWBAT}. Connect a 2.2µF low ESR capacitor from $INTV_{CC}$ to GND. Do not place any external load on $INTV_{CC}$ other than the NTC bias network. Overloading this pin can disrupt internal operation. When the RUN pin is above V_{EN}, and $INTV_{CC}$ rises above the UVLO threshold, and IN rises above BAT by ΔV_{DUVLO} and its hysteresis, the charger is enabled.

BOOST (Pin 2): Boosted Supply Pin. Connect a 22nF boost capacitor from this pin to the SW pin.

IN (Pin 3): Positive Input Power Supply. Decouple to GND with a 10µF or larger low ESR capacitor.

SW (Pin 4): Switch Pin. The SW pin delivers power from IN to BAT via the step-down switching regulator. An inductor should be connected from SW to CHGSNS. See the Applications Information section for a discussion of inductor selection.

GND (Pin 5, Exposed Pad Pin 17): Ground Pin. Connect to exposed pad. The exposed pad must be soldered to PCB GND to provide a low electrical and thermal impedance connection to ground.

DHC (Pin 6): Dynamic Harmonization Control Pin. Connect a Schottky diode from the DHC pin to the IN pin, and a capacitor from the DHC pin as shown in the Typical Application or the Block Diagram. When V_{IN} is greater than $V_{IN(DHC)}$, this pin is high impedance. When V_{IN} is below $V_{IN(DHC)}$ this pin is low impedance allowing the LTC4120 to modulate the resonance of the tuned receiver network. See Applications Information for more information on the tuned receiver network.

FREQ (Pin 7): Buck Switching Frequency Select Input Pin. Connect to $INTV_{CC}$ to select a 1.5MHz switching frequency or GND to select a 750kHz switching frequency. Do not float.

CHGSNS (Pin 8): Battery Charge Current Sense Pin. An internal current sense resistor between CHGSNS and BAT pins monitors battery charge current. An inductor should be connected from SW to CHGSNS.

BAT (Pin 9): Battery Output Pin. Battery charge current is delivered from this pin through the internal charge current sense resistor. In low battery conditions a small linear charge current, I_{LOWBAT}, is sourced from this pin to precondition the battery. Decouple the BAT pin with a low ESR 22µF or greater ceramic capacitor to GND.

BATSNS (Pin 10, LTC4120-4.2 Only): Battery Voltage Sense Pin. For proper operation, this pin must always be connected physically close to the positive battery terminal.

FB (Pin 10, LTC4120 Only): Battery Voltage Feedback Pin. The charge function operates to achieve a final float voltage of 2.4V at this pin. Battery float voltage is programmed using a resistive divider from BAT to FB to FBG, and can be programmed up to 11V. The feedback pin input bias current, I_{FB}, is 25nA. Using a resistive divider with a Thevenin equivalent resistance of 588k compensates for input bias current error (see curve of FB Pin Bias Current versus Temperature in the Typical Performance Characteristics).

FBG (Pin 11, LTC4120 Only): Feedback Ground Pin. This pin disconnects the external FB divider load from the battery when it is not needed. When sensing the battery voltage this pin presents a low resistance, R_{FBG}, to GND. When in disabled or shutdown modes this pin is high impedance.

NTC (Pin 12): Input to the Negative Temperature Coefficient Thermistor Monitoring Circuit. The NTC pin connects to a negative temperature coefficient thermistor which is typically co-packaged with the battery to determine if the battery is too hot or too cold to charge. If the battery's temperature is out of range, the LTC4120 enters standby mode and charging is paused until the battery temperature re-enters the valid range. A low drift bias resistor is required from $INTV_{CC}$ to NTC and a thermistor is required from NTC to GND. Tie the NTC pin to GND to disable NTC qualified charging if NTC functionality is not required.

PROG (Pin 13): Charge Current Program and Charge Current Monitor Pin. Connect a 1% resistor between 3.01k (400mA) and 24.3k (50mA) from PROG to ground to program the charge current. While in constant-current mode, this pin regulates to 1.227V. The voltage at this pin represents the average battery charge current using the following formula:

$$I_{BAT} = h_{PROG} \bullet \frac{V_{PROG}}{R_{PROG}}$$

PIN FUNCTIONS

where h_{PROG} is typically 988. Keep parasitic capacitance on the PROG pin to a minimum.

$\overline{CHRG}$ (Pin 14): Open-Drain Charge Status Output Pin. Typically pulled up through a resistor to a reference voltage, the $\overline{CHRG}$ pin indicates the status of the battery charger. The pin can be pulled up to voltages as high as IN when disabled, and can sink currents up to 5mA when enabled. When the battery is being charged, the $\overline{CHRG}$ pin is pulled low. When the termination timer expires or the charge current drops below 10% of the programmed value, the $\overline{CHRG}$ pin is forced to a high impedance state.

$\overline{FAULT}$ (Pin 15): Open-Drain Fault Status Output Pin. Typically pulled up through a resistor to a reference voltage, this status pin indicates fault conditions during a charge cycle. The pin can be pulled up to voltages as high as IN when disabled, and can sink currents up to 5mA when enabled. An NTC temperature fault causes this pin to be pulled low. A bad battery fault also causes this pin to be pulled low. If no fault conditions exist, the $\overline{FAULT}$ pin remains high impedance.

RUN (Pin 16): Run Pin. When RUN is pulled below V_{EN} and its hysteresis, the device is disabled. In disabled mode, battery charge current is zero and the $\overline{CHRG}$ and $\overline{FAULT}$ pins assume high impedance states. If the voltage at RUN is pulled below V_{SD}, the device is in shutdown mode. When the voltage at the RUN pin rises above V_{EN}, the $INTV_{CC}$ LDO turns on. When the $INTV_{CC}$ LDO rises above its UVLO threshold the charger is enabled. The RUN pin should be tied to a resistive divider from V_{IN} to program the input voltage at which charging is enabled. Do not float the RUN pin.

BLOCK DIAGRAM

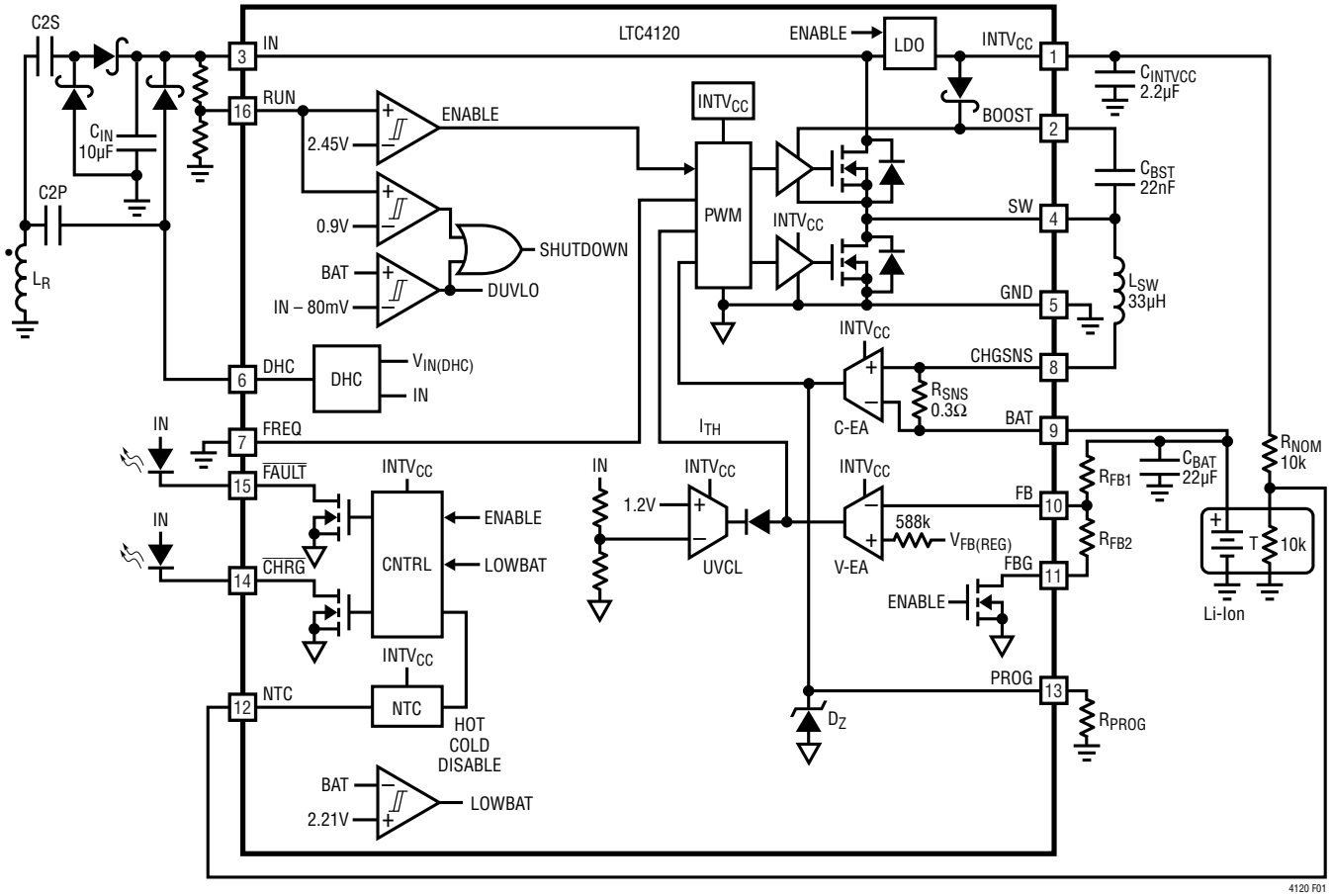

Figure 1. Block Diagram

Rev. G

BLOCK DIAGRAM

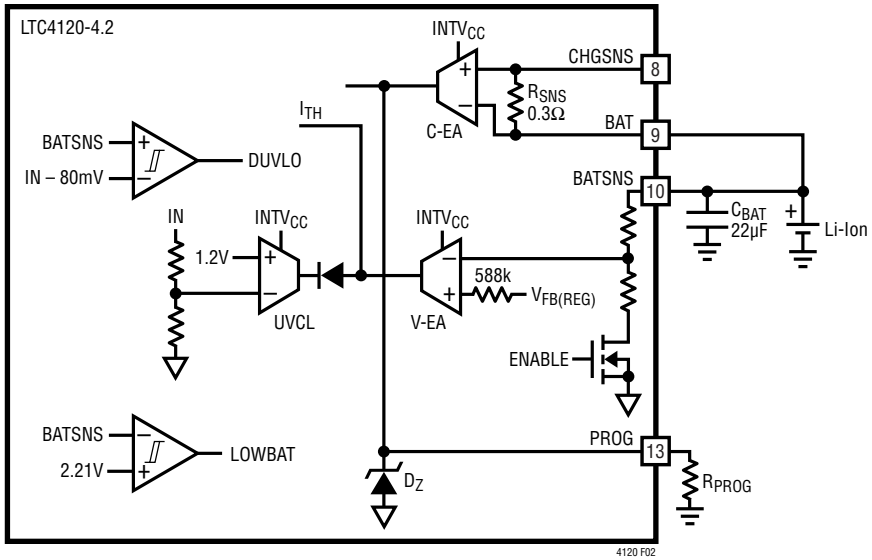

Figure 2. LTC4120-4.2 BATSNS Connections

TEST CIRCUIT

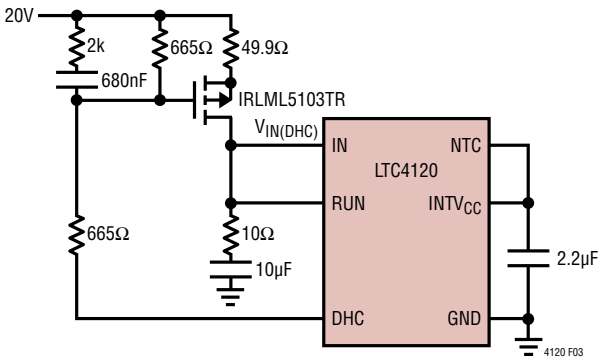

Figure 3. $V_{IN(DHC)}$ Test Circuit

OPERATION

Wireless Power System Overview

The LTC4120 is one component in a complete wireless power system. A complete system is composed of transmit circuitry, a transmit coil, a receive coil and receive circuitry—including the LTC4120. Please refer to the Applications Information section for more information on transmit circuitry and coils. In particular, the Resonant Transmitter and Receiver and the Alternative Transmitter Options sections include information necessary to complete the design of a wireless power system. Further information can be found in the Applications Information section of this document under the heading Resonant Transmitter and Receiver, as well as in AN138: Wireless Power Users Guide, as well as the DC1969A: wireless power transmit and receiver demo kit and manual. The Gerber layout files for both the Transmitter and Receiver boards are available at the following link:

LTC4120 Evaluation Kits

LTC4120 Overview

The LTC4120 is a synchronous step-down (buck) wireless battery charger with dynamic harmonization control (DHC). DHC is a highly efficient method of regulating the received input voltage in a resonant coupled power transfer application. The LTC4120 serves as a constant-current/constant-voltage battery charger with the following built-in charger functions: programmable charge current, programmable float voltage (LTC4120), battery precondition with half-hour timeout, precision shutdown/run control, NTC thermal protection, a 2-hour safety termination timer, and automatic recharge. The LTC4120 also provides output pins to indicate state of charge and fault status.

The circuit in Figure 4 is a fully functional system using a basic current-fed resonant converter for the transmitter and a series resonant converter for the receiver with the LTC4120. The LTC4125 advanced transmitter may also be used with the LTC4120. For more information on transmitter design refer to Application Note 138: Wireless Power Users Guide.

Wireless Power Transfer

A wireless coupled power transfer system consists of a transmitter that generates an alternating magnetic field, and a receiver that collects power from that field. The ideal transmitter efficiently generates a large alternating current in the transmitter coil, L_X. The push-pull current-fed resonant converter, shown in Figure 4, is an example of a basic power transmitter that may be used with the LTC4120. This transmitter typically operates at a frequency of approximately 130kHz; though the operating

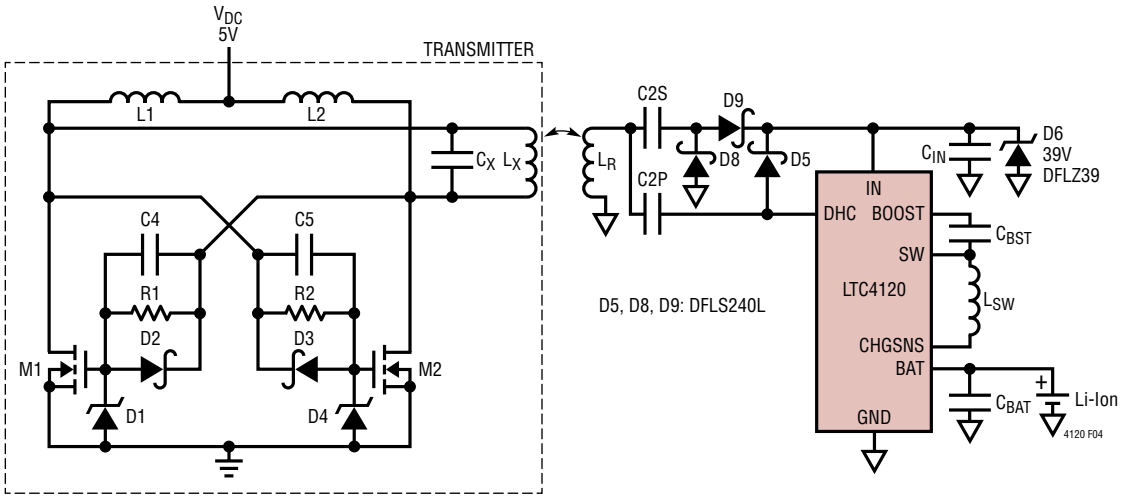

Figure 4. DC-AC Converter, Transmit/Receive Coils, Tuned Series Resonant Receiver and AC-DC Rectifier

OPERATION

frequency varies depending on the load at the receiver and the coupling to the receiver coil. For L_X = 5µH, and C_X = 300nF, the transmitter frequency is:

$$f_0 \approx \frac{1}{2 \bullet \pi \bullet \sqrt{L_X \bullet C_X}} = 130\,kHz$$

This transmitter typically generates an AC coil current of about $2.5A_{RMS}$. For more information on this transmitter, refer to AN138: Wireless Power Users Guide.

The receiver consists of a coil, L_R, configured in a resonant circuit followed by a rectifier and the LTC4120. The receiver coil presents a load reflected back to the transmitter through the mutual inductance between L_R and L_X. The reflected impedance of the receiver may influence the operating frequency of the transmitter. Likewise, the power output by the transmitter depends on the load at the receiver. The resonant coupled charging system, consisting of both the transmitter and LTC4120 charger, provides an efficient method for wireless battery charging as the power output by the transmitter varies automatically based on the power used to charge a battery.

Dynamic Harmonization Control

Dynamic harmonization control (DHC) is a technique for regulating the received input power in a wireless power transfer system. DHC modulates the impedance of the resonant receiver to regulate the voltage at the input to the LTC4120. When the input voltage to the LTC4120 is below the $V_{IN(DHC)}$ set point, the LTC4120 allows more power to appear at the receiver by tuning the receiver resonance closer to the transmitter resonance. If the input voltage exceeds $V_{IN(DHC)}$, the LTC4120 tunes the receiver resonance away from the transmitter, which reduces the power available at the receiver. The amount that the input power increases or decreases is a function of the coupling, the tuning capacitor, C2P, the receiver coil, L_R, and the operating frequency.

Figure 5 illustrates the components that implement the DHC function to automatically tune the resonance of the receiver. Capacitor C2S and inductor L_R serve as a series resonator. Capacitor C2P and the DHC pin of the LTC4120 form a parallel resonance when the DHC pin is low impedance, and disconnect when the DHC pin is high impedance. C2P adjusts the receiver resonance to control the amount of power available at the input of the LTC4120. C2P also affects power dissipation in the LTC4120 due to the AC current being shunted by the DHC pin. For this reason it is not recommended to apply total capacitance in excess of 30nF at this pin.

Using DHC, the LTC4120 automatically adjusts the power received depending on load requirements; typically the load is battery charge current. This technique results in significant power savings, as the power required by the transmitter automatically adjusts to the requirements at the receiver. Furthermore, DHC reduces the rectified voltage seen at the input of the LTC4120 under light load conditions when the battery is fully charged.

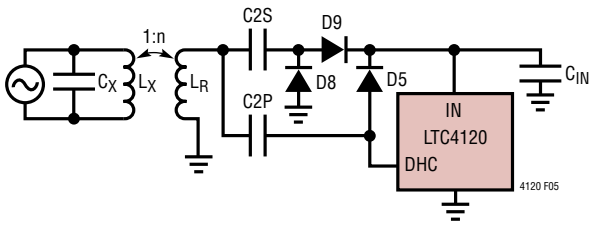

Figure 5. Resonant Receiver Tank

OPERATION

The design of the resonant receiver circuit (L_R, C2S and C2P), the transmitter circuit, and the mutual inductance between L_X and L_R determines both the maximum unloaded voltage at the input to the LTC4120 as well as the maximum power available at the input to the LTC4120. The value and tolerances of these components must be selected with care for stable operation, for this reason it is recommended to only use components with tight tolerances.

To understand the operating principle behind dynamic harmonization control (DHC), consider the following simplification. Here, a fixed-frequency transmitter is operating at a frequency f_O = 130kHz. DHC automatically adjusts the impedance of the receiver tuned network so as to modulate the resonant frequency of the receiver between f_T and f_D.

$$f_T \cong \frac{1}{2 \bullet \pi \bullet \sqrt{L_R \bullet (C2P + C2S)}}$$

$$f_D \cong \frac{1}{2 \bullet \pi \bullet \sqrt{L_R \bullet C2S}}$$

When the input voltage is above $V_{IN(DHC)}$ (typically 14V), the LTC4120 opens the DHC pin, detuning the receiver resonance away from the transmitter frequency f_O, so that less power is received. When the input voltage is below $V_{IN(DHC)}$, the LTC4120 shunts the DHC pin to ground, tuning the receiver resonance closer to the transmitter frequency so that more power is available.

For the resonant converter shown in Figure 4, the operating frequency of the transmitter is not fixed, but varies depending on the load impedance. However the basic operating principle of DHC remains valid. For more information on the design of the wireless power receiver resonant circuit refer to the applications section.

Programming The Battery Float Voltage

For the LTC4120, the battery float voltage is programmed by placing a resistive divider from the battery to FB and FBG as shown in Figure 6. The programmable battery float voltage, V_{FLOAT}, is then governed by the following equation:

$$V_{FLOAT} = V_{FB(REG)} \bullet \frac{(R_{FB1} + R_{FB2})}{R_{FB2}}$$

where $V_{FB(REG)}$ is typically 2.4V.

Due to the input bias current (I_{FB}) of the voltage error amp (V-EA), care must also be taken to select the Thevenin equivalent resistance of $R_{FB1}||R_{FB2}$ close to 588k. Start by calculating R_{FB1} to satisfy the following relations:

$$R_{FB1} = \frac{V_{FLOAT} \bullet 588k}{V_{FB(REG)}}$$

Find the closest 0.1% or 1% resistor to the calculated value. With R_{FB1} calculate:

$$R_{FB2} = \frac{V_{FB(REG)} \bullet R_{FB1}}{V_{FLOAT} - V_{FB(REG)}} - 1000\Omega$$

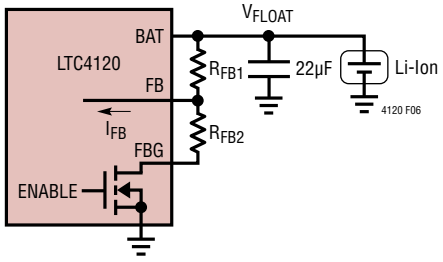

Figure 6. Programming the Float Voltage with the LTC4120

OPERATION

where 1000Ω represent the typical value of R_{FBG}. This is the resistance of the FBG pin which serves as the ground return for the battery float voltage divider.

Once R_{FB1} and R_{FB2} are selected, recalculate the value of V_{FLOAT} obtained with the resistors available. If the error is too large substitute another standard resistor value for R_{FB1} and recalculate R_{FB2}. Repeat until the float voltage error is acceptable.

Table 1 and Table 2 list recommended standard 0.1% and 1% resistor values for common battery float voltages.

Table 1. Recommended 0.1% Resistors for Common V_{FLOAT}

V_{FLOAT}	R_{FB1}	R_{FB2}	TYPICAL ERROR
3.6V	887k	1780k	–0.13%
4.1V	1.01M	1.42M	0.15%
4.2V	1.01M	1.35M	–0.13%
7.2V	1.8M	898k	0.08%
8.2V	2.00M	825k	0.14%
8.4V	2.05M	816k	0.27%

Table 2. Recommended 1% Resistors for Common V_{FLOAT}

V_{FLOAT}	R_{FB1}	R_{FB2}	TYPICAL ERROR
3.6V	887k	1780k	–0.13%
4.1V	1.02M	1.43M	0.26%
4.2V	1.02M	1.37M	–0.34%
7.2V	1.78M	887k	0.16%
8.2V	2.00M	825k	0.14%
8.4V	2.1M	845k	–0.50%

Programming the Charge Current

The current-error amp (C-EA) measures the current through an internal 0.3Ω current sense resistor between the CHGSNS and BAT pins. The C-EA outputs a fraction of the charge current, $1/h_{PROG}$, to the PROG pin. The voltage-error amp (V-EA) and PWM control circuitry can limit the PROG pin voltage to control charge current. An internal clamp (D_Z) limits the PROG pin voltage to V_{PROG}, which in turn limits the charge current to:

$$I_{CHG} = \frac{h_{PROG} \bullet V_{PROG}}{R_{PROG}} = \frac{1212V}{R_{PROG}}$$

$$I_{CHG_TRKL} = \frac{h_{PROG} \bullet V_{PROG_TRKL}}{R_{PROG}} = \frac{120V}{R_{PROG}}$$

where h_{PROG} is typically 988, V_{PROG} is either 1.227V or 122mV during trickle charge, and R_{PROG} is the resistance of the grounded resistor applied to the PROG pin. The PROG resistor sets the maximum charge current, or the current delivered while the charger is operating in constant-current (CC) mode.

Analog Charge Current Monitor

The PROG pin provides a voltage signal proportional to the actual charge current. Care must be exercised in measuring this voltage as any capacitance at the PROG pin forms a pole that may cause loop instability. If observing the PROG pin voltage, add a series resistor of at least 2k and limit stray capacitance at this node to less than 50pF.

In the event that the input voltage cannot support the demanded charge current, the PROG pin voltage may not represent the actual charge current. In cases such as this, the PWM switch frequency drops as the charger enters drop-out operation where the top switch remains on for more than one clock cycle as the inductor current attempts to ramp up to the desired current. If the top switch remains on in drop-out for 8 clock cycles a dropout detector forces the bottom switch on for the remainder of the 8th cycle. In such a case, the PROG pin voltage remains at 1.227V, but the charge current may not reach the desired level.

Undervoltage Current Limit

The undervoltage current limit (UVCL) feature reduces charge current as the input voltage drops below V_{UVCL}

OPERATION

(typically 12V). This low gain amplifier typically keeps V_{IN} within 100mV of V_{UVCL}, but if insufficient power is available the input voltage may drop below this value; and the charge current will be reduced to zero.

NTC Thermal Battery Protection

The LTC4120 monitors battery temperature using a thermistor during the charging cycle. If the battery temperature moves outside a safe charging range, the IC suspends charging and signals a fault condition until the temperature returns to the safe charging range. The safe charging range is determined by two comparators that monitor the voltage at the NTC pin. NTC qualified charging is disabled if the NTC pin is pulled below about 85mV (V_{DIS}).

Thermistor manufacturers usually include either a temperature lookup table identified with a characteristic curve number, or a formula relating temperature to the resistor value. Each thermistor is also typically designated by a thermistor gain value $B_{25/85}$.

The NTC pin should be connected to a voltage divider from $INTV_{CC}$ to GND as shown in Figure 7. In the simple application (R_{ADJ} = 0) a 1% resistor, R_{BIAS}, with a value equal to the resistance of the thermistor at 25°C is connected from $INTV_{CC}$ to NTC, and a thermistor is connected from NTC to GND. With this setup, the LTC4120 pauses charging when the resistance of the thermistor

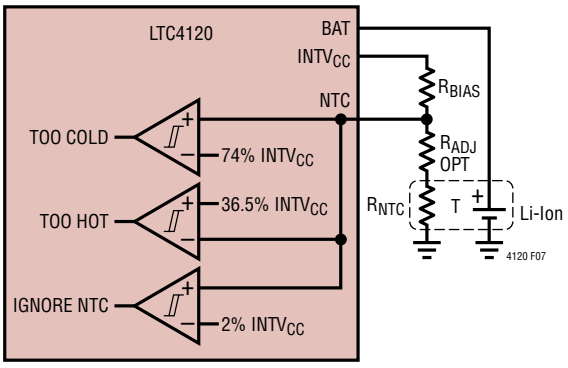

Figure 7. NTC Connections

increases to 285% of the R_{BIAS} resistor as the temperature drops. For a Vishay Curve 2 thermistor with $B_{25/85}$ = 3490 and 25°C resistance of 10k, this corresponds to a temperature of about 0°C. The LTC4120 also pauses charging if the thermistor resistance decreases to 57.5% of the R_{BIAS} resistor. For the same Vishay Curve 2 thermistor, this corresponds to approximately 40°C. With a Vishay Curve 2 thermistor, the hot and cold comparators both have about 2°C of hysteresis to prevent oscillations about the trip points.

The hot and cold trip points may be adjusted using a different type of thermistor, or a different R_{BIAS} resistor, or by adding a desensitizing resistor, R_{ADJ}, or by a combination of these measures as shown in Figure 7. For example, by increasing R_{BIAS} to 12.4k, with the same thermistor as before, the cold trip point moves down to –5°C, and the hot trip point moves down to 34°C. If a Vishay Curve 1 thermistor with $B_{25/85}$ = 3950 and resistance of 100k at 25°C is used, a 1% R_{BIAS} resistor of 118k and a 1% R_{ADJ} resistor of 12.1k results in a cold trip point of 0°C, and a hot trip point of 39°C.

End-Of-Charge Indication and Safety Timeout

The LTC4120 uses a safety timer to terminate charging. Whenever the LTC4120 is in constant current mode the timer is paused, and if FB transitions through the V_{RCHG} threshold the timer is reset. When the battery voltage reaches the float voltage, a safety timer begins counting down a 2-hour timeout. If charge current falls below one-tenth of the programmed maximum charge current ($h_{C/10}$), the $\overline{CHRG}$ status pin rises, but top-off charge current continues to flow until the timer finishes. After the timeout, the LTC4120 enters a low power sleep mode.

Automatic Recharge

In sleep mode, the IC continues to monitor battery voltage. If the battery falls 2.2% (V_{RCHG} or V_{RCHG_42}) from the

OPERATION

full-charge float voltage, the LTC4120 engages an automatic recharge cycle. Automatic recharge has a built-in filter of about 0.5ms to prevent triggering a new charge cycle if a load transient causes the battery voltage to drop temporarily.

State of Charge and Fault Status Pins

The LTC4120 contains two open-drain outputs which provide charge status and signal fault indications. The binary-coded $\overline{CHRG}$ pin pulls low to indicate charging at a rate higher than C/10. The $\overline{FAULT}$ pin pulls low to indicate a bad battery timeout, or to indicate an NTC thermal fault condition. During NTC faults the $\overline{CHRG}$ pin remains low, but when a bad battery timeout occurs the $\overline{CHRG}$ pin de-asserts. When the open-drain outputs are pulled up with a resistor, Table 3 summarizes the charger state that is indicated by the pin voltages.

Table 3. LTC4120 Open-Drain Indicator Outputs with Resistor Pull-Ups

$\overline{FAULT}$	$\overline{CHRG}$	CHARGER STATE
High	High	Off or Topping Off Charging at a Rate Less Than C/10
High	Low	Charging at Rate Higher Than C/10
Low	High	Bad Battery Fault
Low	Low	NTC Thermal Fault Charging Paused

Low Battery Voltage Operation

The LTC4120 automatically preconditions heavily discharged batteries. If the battery voltage is below V_{LOWBAT} minus its hysteresis (typically 2.05V—e.g., battery pack protection has been engaged) a DC current, I_{LOWBAT}, is applied to the BAT pin from the $INTV_{CC}$ supply. When the battery voltage rises above V_{LOWBAT}, the switching regulator is enabled and charges the battery at a trickle charge level of 10% of the full-scale charge current (in addition to the DC I_{LOWBAT} current). Trickle charging of the battery continues until the sensed battery voltage (sensed via the feedback pin for the LTC4120) rises above the trickle charge threshold, V_{TRKL}. When the battery rises above the trickle charge threshold, the full-scale charge current is applied and the DC trickle charge current is turned off. If the battery remains below the trickle charge threshold for more than 30 minutes, charging terminates and the fault status pin is asserted to indicate a bad battery. After a bad battery fault, the LTC4120 automatically restarts a new charge cycle once the failed battery is removed and replaced with another battery. The LTC4120-4.2 monitors the BATSNS pin voltage to sense LOWBAT and TRKL conditions.

Precision Run/Shutdown Control

The LTC4120 remains in a low power disabled mode until the RUN pin is driven above V_{EN} (typically 2.45V). While the LTC4120 is in disabled mode, current drain from the battery is reduced to extend battery lifetime, the status pins are both de-asserted, and the FBG pin is high impedance. Charging can be stopped at any time by pulling the RUN pin below 2.25V. The LTC4120 also offers an extremely low operating current shutdown mode when the RUN pin is pulled below V_{SD} (typically 0.7V). In this condition less than 20µA is drawn from the supply at IN.

Differential Undervoltage Lockout

The LTC4120 monitors the difference between the battery voltage, V_{BAT}, and the input supply, V_{IN}. If the difference (V_{IN}-V_{BAT}) falls to V_{DUVLO}, all functions are disabled and the part is forced into shutdown mode until (V_{IN}-V_{BAT}) rises above the V_{DUVLO} hysteresis. The LTC4120-4.2 monitors the BATSNS and IN pin voltages to sense DUVLO condition.

User Selectable Buck Operating Frequency

The LTC4120 uses a constant-frequency synchronous step-down buck architecture to produce high operating efficiency. The nominal operating frequency of the buck, f_{OSC}, is programmed by connecting the FREQ pin to either $INTV_{CC}$ or to GND to obtain a switching frequency of 1.5MHz or 750kHz, respectively. The high operating frequency allows the use of smaller external components.

Selection of the operating frequency is a trade-off between efficiency, component size, and margin from the minimum on-time of the switcher. Operation at lower frequency

OPERATION

improves efficiency by reducing internal gate charge and switching losses, but requires larger inductance values to maintain low output ripple. Operation at higher frequency allows the use of smaller components, but may require sufficient margin from the minimum on-time at the lowest duty cycle if fixed-frequency switching is required.

PWM Dropout Detector

If the input voltage approaches the battery voltage, the LTC4120 may require duty cycles approaching 100%. This mode of operation is known as dropout. In dropout, the operating frequency may fall well below the programmed f_{OSC} value. If the top switch remains on for eight clock cycles, the dropout detector activates and forces the bottom switch on for the remainder of that clock cycle or until the inductor current decays to zero. This avoids a potential source of audible noise when using ceramic input or output capacitors and prevents the boost supply capacitor for the top gate drive from discharging. In dropout operation, the actual charge current may not be able to reach the full-scale programmed value. In such a scenario the analog charge current monitor function does not represent actual charge current being delivered.

Burst Mode Operation

At low charge currents, for example during constant-voltage mode, the LTC4120 automatically enters Burst Mode operation. In Burst Mode operation the switcher is periodically forced into standby mode in order to improve efficiency. The LTC4120 automatically enters Burst Mode operation after it exits constant-current (CC) mode and as the charge current drops below about 80mA. Burst Mode operation is triggered at lower currents for larger PROG resistors, and depends on the input supply voltage. Refer to graph Burst Mode Trigger Current and graph Typical Burst Mode Waveform, in the Typical Performance Characteristics, for more information on Burst Mode operation. Burst Mode operation has some hysteresis and remains engaged for battery currents up to about 150mA.

While in Burst Mode operation, the PROG pin voltage to average charge current relationship is not well defined. This is due to the PROG pin voltage falling to 0V in between bursts, as shown in G14. If the PROG pin voltage falls below 120mV for longer than 350µs this causes the $\overline{CHRG}$ pin to de-assert, indicating C/10. Burst current ripple depends on the selected switch inductor, and V_{IN}/V_{BAT}.

BOOST Supply Refresh

The BOOST supply for the top gate drive in the LTC4120 switching regulator is generated by bootstrapping the BOOST flying capacitor to $INTV_{CC}$ whenever the bottom switch is turned on. This technique provides a voltage of $INTV_{CC}$ from the BOOST pin to the SW pin. In the event that the bottom switch remains off for a prolonged period of time, e.g., during Burst Mode operation, the BOOST supply may require a refresh. Similar to the PWM dropout timer, the LTC4120 counts the number of clock cycles since the last BOOST refresh. When this count reaches 32, the next PWM cycle begins by turning on the bottom side switch first. This pulse refreshes the BOOST flying capacitor to $INTV_{CC}$ and ensures that the topside gate driver has sufficient voltage to turn on the topside switch at the beginning of the next cycle.

Operation Without an Input Supply or Wireless Power

When a battery is the only available power source, care should be taken to eliminate loading of the IN pin. Load current on IN drains the battery through the body diode of the top side power switch as V_{IN} falls below V_{SW}. To prevent this possibility, place a diode between the input supply and the IN capacitor, C_{IN}. The rectification diode (D9 in Figure 5 and Figure 11) in the wireless power applications also eliminates this discharge path. Alternately, a P-channel MOSFET may be placed in series with the BAT pin provided care is taken to directly sense the positive battery terminal voltage with FB via the battery resistive divider. This is illustrated in Figure 15.

APPLICATIONS INFORMATION

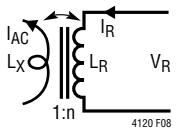

Figure 8. Wireless Power Transfer

Wireless Power Transfer

In a wireless power transfer system, power is transmitted using alternating magnetic fields. Power is transferred based on the principle that an AC current in a transmitter coil produces an AC current in a receiver coil that is placed in the magnetic field generated by the transmitter coil. The magnetic field coupling is described by the mutual inductance, M. This term does not have a physical representation but is referred to using the unit-less terms k and n. Where k is the coupling coefficient:

$$k = \frac{M}{\sqrt{L_X \bullet L_R}}$$

And n is the turns ratio—the number of turns in the receiver coil divided by the number of turns in the transmitter coil:

$$n = \frac{n_R}{n_X} = \sqrt{\frac{L_R}{L_X}}$$

The turns ratio is proportional to the square root of the ratio of receiver coil inductance to transmitter coil inductance. In the wireless power transfer system an AC current, I_{AC}, applied to the transmit coil L_X, produces an AC current in the receive coil, L_R of:

$$I_{R(AC)} = 2 \bullet \pi \bullet M \bullet I_{AC} = 2 \bullet \pi \bullet k \bullet \sqrt{L_X \bullet L_R} \bullet I_{AC}$$

The coupling coefficient is a variable that depends on the orientation and proximity of the transmitter coil relative to the receiver coil. If the two coils are in a transformer, then k = 1. If the two coils are completely isolated from each other then k = 0. In a typical LTC4120-based wireless power design, k varies from around 0.18 at 10mm spacing, to about 0.37 with the coils at 3mm spacing. This is illustrated in Figure 9.

With low resistance in the L_X and L_R coils, the efficiency is inherently high, even at low coupling ratios. The transmitter in Figures 4 and 10 generates a sine wave at the resonant frequency, f_O, across the transmitter coil and

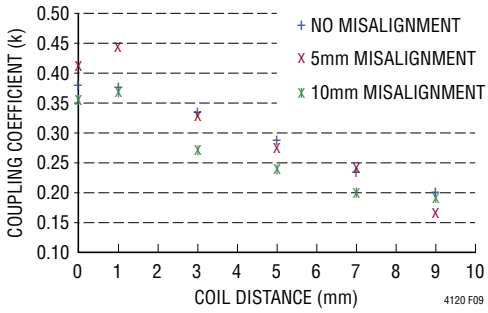

Figure 9. Coupling Coefficient k vs Distance

capacitor ($L_X||C_X$). With a peak-to-peak amplitude that is proportional to the applied input voltage:

$$V_{AC} \cong 2 \bullet \pi \bullet V_{DC}$$

This generates a sinusoidal current in the transmit coil with peak-to-peak amplitude:

$$I_{AC} = \frac{V_{AC}}{2 \bullet \pi \bullet f_O \bullet L_X} \cong \frac{V_{DC}}{f_O \bullet L_X}$$

The AC voltage induced at the receive coil is a function of both the applied voltage, the coupling, as well as the impedance at the receiver. With no load at the receiver, the open-circuit voltage, $V_{IN(OC)}$, is approximately:

$$V_{IN(OC)} \cong k \bullet n \bullet 2 \bullet \pi \bullet V_{DC}$$

The receiver (shown in Figures 5 and 10) uses a resonant tuned circuit followed by a rectifier to convert the induced AC voltage into a DC voltage to power the LTC4120 and charge a battery. Power delivered to the LTC4120 depends on the impedance of the LTC4120 and the impedance of the tuned circuit at the resonant frequency of the transmitter. The LTC4120 employs a proprietary circuit, called dynamic harmonization control (DHC) that modulates the impedance of the receiver depending on the voltage at the input to the LTC4120. This technique ensures that over a wide range of coupling coefficients the induced rectified voltage does not exceed voltage compliance ratings when the load goes away (e.g, when the battery is fully charged). DHC efficiently adjusts the receiver impedance depending on the load without compromising available power.

In the event that the coupling may become too large (e.g. receiver coil is placed too close to the transmitter coil) then it is recommended to place a Zener diode across the

APPLICATIONS INFORMATION

input to the LTC4120 to prevent exceeding the absolute maximum rating of the LTC4120. Diode D6 (in Figure 4 and Figure 10) illustrates this connection.

The RMS voltage at the rectifier output depends on the load of the LTC4120, i.e., the charge current, as well as the applied AC current, I_{AC}. The applied AC current depends both on the components of the tuned network as well as the applied DC voltage. The load at the receiver depends on the state of charge of the battery. If the coupling and/or the applied AC current is not well controlled, the addition of a 39V Zener diode (D6 in Figures 4 and 10) at the input to the LTC4120 will prevent overvoltage conditions from damaging the LTC4120.

Resonant Transmitter and Receiver

An example DC/AC transmitter is shown in Figure 10. A 5V ±5% supply to the transmitter efficiently produces a circulating AC current in L_X, which is coupled to L_R. For higher voltage inputs, a pre-regulator DC/DC converter can be used to generate 5V (see Figure 11). Power is transmitted from transmitter to receiver at the resonant

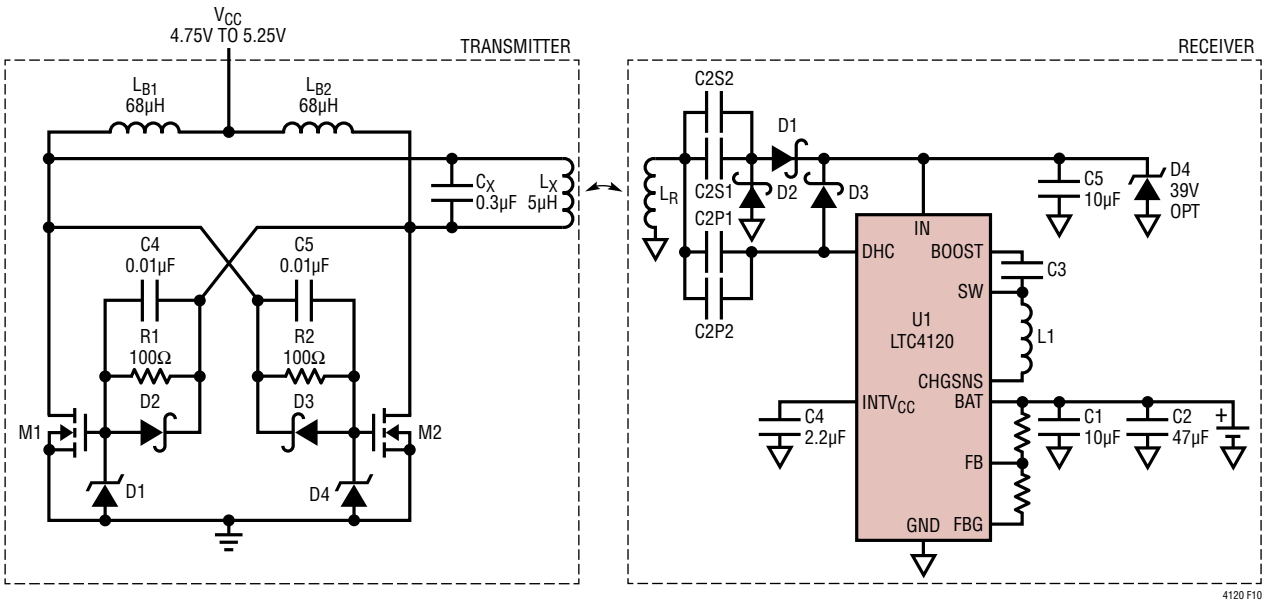

Figure 10. DC/AC Converter, Transmit/Receive Coils, Tuned Series Resonant Receiver and AC/DC Rectifier

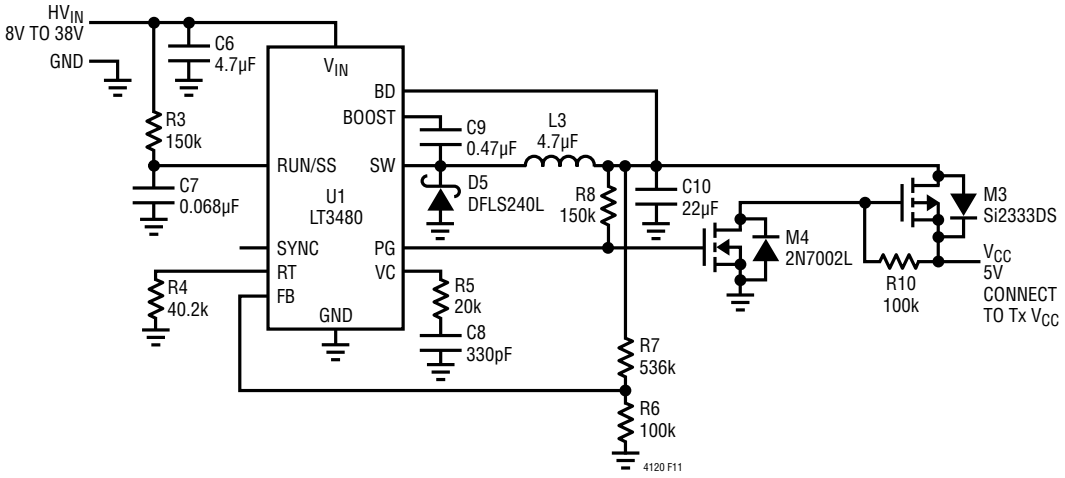

Figure 11. High Voltage Pre-Regulator for Transmitter

APPLICATIONS INFORMATION

frequency, f_O; which depends on both component values as well as the load at the receiver. The tolerance of the components selected in both the transmitter and receiver circuits is critical to achieving maximum power transfer. The voltages across the receiver components may reach 40V, so adequate voltage ratings must also be observed.

Resonant Converter Component Selection

It is recommended to use the components listed in Table 4 and Table 5 for the resonant transmitter and receiver respectively. Figure 12 illustrates the PCB layout of the embedded receiver coil. Figure 13 and Figure 14 show the finished transmitter and receiver. The 25mm ferrite bead

Table 4. Recommended Transmitter and High Voltage Pre-Regulator Components

Transmitter Components		
ITEM	**DESCRIPTION**	**MANUFACTURER/PART NUMBER**
D2, D3	DIODE, SCHOTTKY, 40V, 2A	ON SEMI NSR10F40NXT5G
D1, D4	DIODE, ZENER, 16V, 350mW, SOT23	DIODES BZX84C16
M1, M2	MOSFET, SMT, N-CHANNEL, 60V, 11mΩ, S08	VISHAY Si4470EY-T1GE3
L_{B1}, L_{B2}	IND, SMT, 68µH, 0.41A, 0.4Ω, ±20%	TDK VLCF5028T-680MR40-2
C4, C5	CAP, CHIP, X7R, 0.01µF, ±10%, 50V, 0402	MURATA GRM155R71H103KA88D
R1, R2	RES, CHIP, 100Ω, ±5%, 1/16W, 0402	VISHAY CRCW0402100RJNED
$C_{X1,2}$	CAP, CHIP, PPS, 0.15µF, ±2%, 50V	PANASONIC ECHU1H154GX9
	CAP, CHIP, PPS, 0.1µF, ±2%, 50V	PANASONIC ECHU1H104GX9
	CAP, CHIP, PPS, 0.033µF, ±2%, 50V	PANASONIC ECHU1H333GX9
C_X (Opt)	CAP, PPS, 0.15µF, ±2.5%, 63VAC, MKS02	WIMA MKS0D031500D00JSSD
	CAP, PPS, 0.10µF, ±2.5%, 63VAC, MKS02	WIMA MKS0D03100
	CAP, PPS, 0.033µF, ±2.5%, 63VAC, MKS02	WIMA MKS0D03033
L_X	5.0µH TRANSMIT COIL	TDK WT-505060-8K2-LT
	or 6.3µH TRANSMIT COIL	TDK WT-505090-10K2-A11-G
	or 6.3µH TRANSMIT COIL	WÜRTH 760308111
	or 5.0µH TRANSMIT COIL	INTER-TECHNICAL L41200T02
High Voltage Pre-Regulator Components		
U1	LT3480EDD, PMIC 38V, 2A, 2.4MHz Step-Down Switching Regulator with 70µA Quiescent Current	LINEAR TECH LT3480EDD
M3	MOSFET, SMT, P-CHANNEL, –12V, 32mΩ, SOT23	VISHAY Si2333DS
M4	MOSFET, SMT, N-CHANNEL, 60V, 7.5Ω, 115mA, SOT23	ON SEMI 2N7002L
D5	DIODE, SCHOTTKY, 40V, 2A, POWERDI123	DIODES DFLS240L
L3	IND, SMT, 4.7µH, 1.6A, 0.125Ω, ±20%	COILCRAFT LPS4018-472M
C6	CAP, CHIP, X5R, 4.7µF, ±10%, 50V, 1206	MURATA GRM155R71H4755KA12L
C7	CAP, CHIP, X5R, 4.7µF, ±10%, 50V, 0603	MURATA GRM188R71H683K
C8	CAP, CHIP, COG, 330pF, ±5%, 50V, 0402	TDK C1005COG1H331J
C9	CAP, CHIP, X7R, 0.47µF, ±10%, 25V, 0603	MURATA GRM188R71E474K
C10	CAP, CHIP, X5R, 22µF, ±20%, 6.3V, 0805	TAIYO-YUDEN JMK212BJ226MG
R3, R8	RES, CHIP, 150k, ±5%, 1/16W, 0402	VISHAY CRCW0402150JNED
R4	RES, CHIP, 40.2k, ±1%, 1/16W, 0402	VISHAY CRCW040240K2FKED
R5	RES, CHIP, 20k, ±1%, 1/16W, 0402	VISHAY CRCW040220K0FKED
R6, R10	RES, CHIP, 100k, ±1%, 1/16W, 0402	VISHAY CRCW0402100KFKED
R7	RES, CHIP, 536k, ±1%, 1/16W, 0402	VISHAY CRCW0402536KFKED

[1]C_X = 300nF with 5µH L_X coil, or C_X = 233nF with 6.3µH L_X coil.

[2]Pay careful attention to assembly guidelines when using ECHU capacitors, as the capacitance value may shift if the capacitor is over heated while soldering. Plastic film capacitors such as Panasonic ECHU series or Metallized Polypropylene capacitors such as WIMA MKP as suitable for the transmitter

APPLICATIONS INFORMATION

Table 5. Recommended Receiver Components

ITEM	DESCRIPTION	MANUFACTURER/PART NUMBER
D1, D2, D3	DIODE, SCHOTTKY, 40V, 2A, POWERDI123	DIODES DFLS240L
D4 (Opt)	DIODE, ZENER, 39V, ±5%, 1W, POWERDI123	DIODES DFLZ39
L_R	IND, EMBEDDED, 47µH, 43 TURNS WITH 25mm FERRITE BEAD	EMBEDDED 4-LAYER PCB (see Figure 12)
		ADAMS MAGNETICS B67410-A0223-X195
	or 47µH RECEIVER COIL	TDK WR282840-37K2-LR3
	or 47µH RECEIVER COIL	WÜRTH 760308101303
	or 48µH RECEIVER COIL	INTER-TECHNICAL L41200R02
L1	IND, SMT, 15µH, 260mΩ, ±20%, 0.86A, 4mm × 4mm	COILCRAFT LPS4018-153ML
C2P1	CAP, CHIP, COG, 0.0047µF, ±5%, 50V, 0805	MURATA GRM21B5C1H472JA01L
C2P2	CAP, CHIP, COG, 0.00018µF, ±5%, 50V, 0603	KEMET C0603C182J5GAC7533
C2S1	CAP, CHIP, COG, 0.022µF, ±5%, 50V, 0805	MURATA GRM21B5C1H223JA01L
C2S2	CAP, CHIP, COG, 0.0047µF, ±5%, 50V, 0805	MURATA GRM21B5C1H472JA01L
C1	CAP, CHIP, X5R, 10µF, ±20%, 16V, 0805	TDK C2012X5R1C106K
C2	CAP, CHIP, X5R, 47µF, ±10%, 16V, 1210	MURATA GRM32ER61C476KE15L
C3	CAP, CHIP, X7R, 0.01µF, ±20%, 6.3V. 0402	TDK C1608X7R1H103K
C4	CAP, CHIP, X5R, 10µF, ±20%, 16V, 0805	TDK C2012X5R1C106K
U1	400mA WIRELESS SYNCHRONOUS BUCK BATTERY CHARGER	LINEAR TECH LTC4120

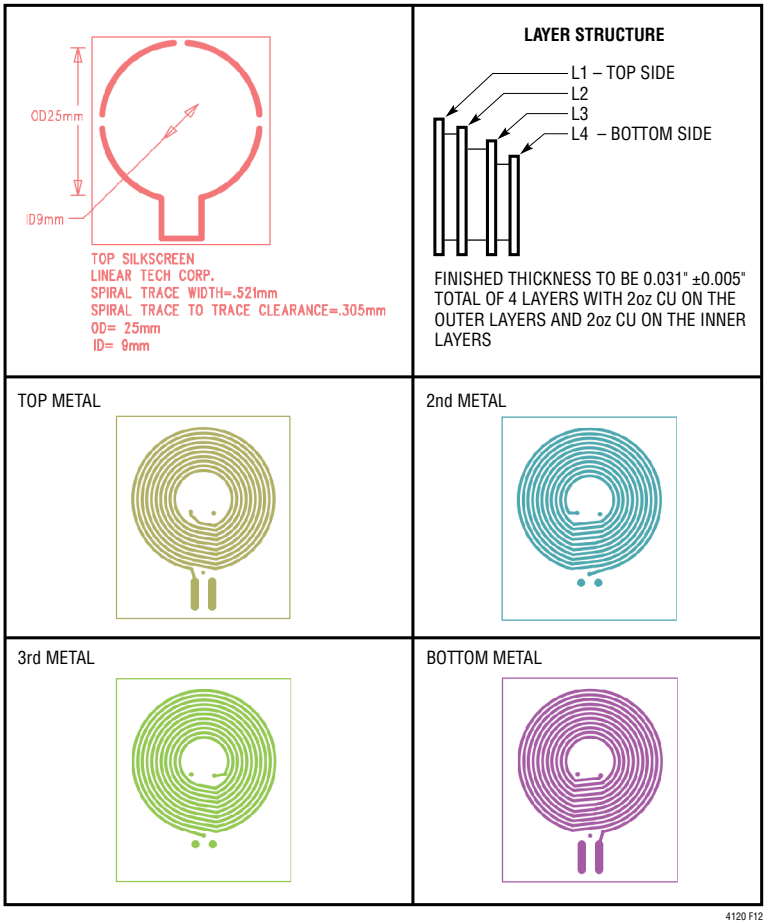

Figure 12. 4-Layer PCB Layout of Rx Coil

APPLICATIONS INFORMATION

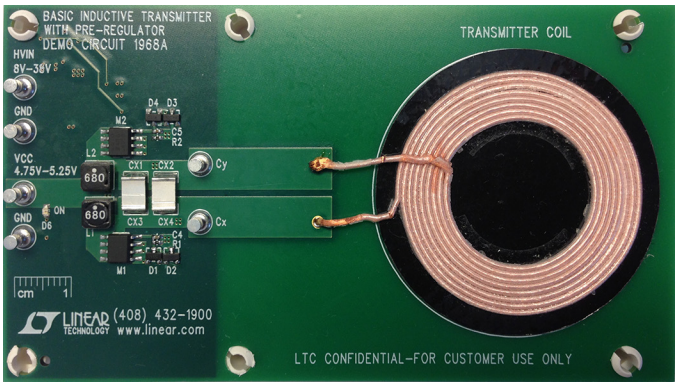

Figure 13. Tx Layout: Demo Circuit 1968A

in Figure 14 covers the embedded receiver coil described in Figure 12. Gerber layout files for both the transmitter and receiver boards are available at the following link:

LTC4120 Evaluation Kits

Alternative component values can be chosen by following the design procedure outlined below.

Resonant Transmitter Tuning: L_X, C_X

The basic transmitter (shown in Figure 4) has a resonant frequency, f_0, that is determined by components L_X, and C_X. The selection of L_X and C_X are coupled so as to obtain the correct operating frequency. The selection of L_X and L_R is also coupled to ideally obtain a turns ratio of 1:3.

Having selected a transmitter inductor, L_X, the transmitter capacitor should be selected to obtain a resonant frequency of 130kHz. Due to limited selection of standard values, several standard value capacitors may need to be used in parallel to obtain the correct value for f_0:

$$f_0 \cong \frac{1}{2 \bullet \pi \bullet \sqrt{L_X \bullet C_X}} = 130\,kHz$$

The transmitter inductor and capacitor, L_X and C_X, support a large circulating current. Series resistance in the inductor is a source of loss and should be kept to a minimum for optimal efficiency. Likewise the transmitter capacitor(s), C_X, must support large ripple currents and must be selected with adequate voltage rating and low dissipation factors.

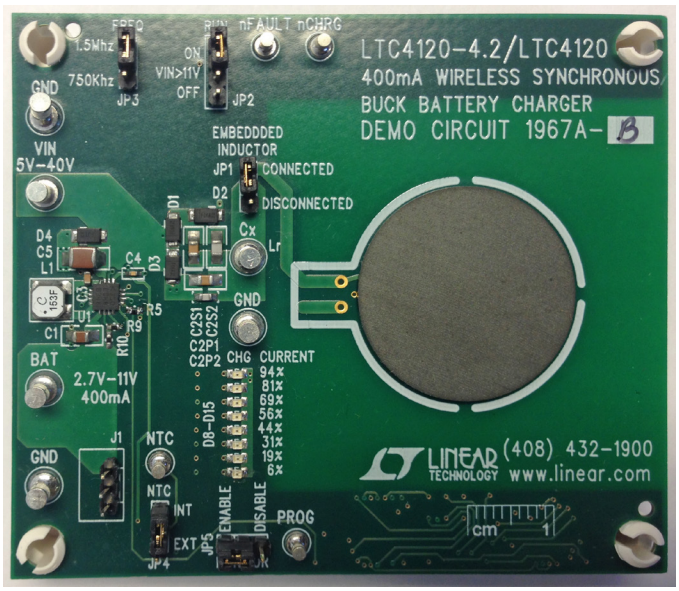

Figure 14. Rx Layout with Ferrite Shield: Demo Circuit 1967A-B

Resonant Receiver Tuning: L_R, C2S, C2P

The tuned circuit resonance of the receiver, f_T, is determined by the selection of L_R and C2S + C2P. Select the capacitors to obtain a resonant frequency 1% to 3% below f_0:

$$f_T \cong \frac{1}{2 \bullet \pi \bullet \sqrt{L_R \bullet (C2P + C2S)}}$$

As in the case of the transmitter, multiple parallel capacitors may need to be used to obtain the optimum value. Finally, select the detuned resonance, f_D to be about 5% to 15% higher than the tuned resonance, keeping the value of C2P below 30nF to limit power dissipation in the DHC pin:

$$f_D \cong \frac{1}{2 \bullet \pi \bullet \sqrt{L_R \bullet C2S}}$$

Alternative Transmitter Options

The resonant DC/AC transmitter discussed in the previous section is a basic and inexpensive to build transmitter. However, this basic transmitter requires a relatively precise DC input voltage to meet a given set of receive power requirements. It is unable to prevent power transmission to foreign metal objects—and can therefore cause these objects to heat up. Furthermore,

APPLICATIONS INFORMATION

the operating frequency of the basic transmitter can vary with component selection.

LTC4120 customers can also choose more advanced transmitter options such as the LTC4125. With additional features such as: foreign metal detection; optimum power search and AutoResonant™ operating frequency. For more information on advanced transmitter options refer to the Wireless Power Users Guide.

Maximum Battery Power Considerations

Using one of the approved transmitter options with this wireless power design provides a maximum of 2W at the input to the LTC4120. It is optimized for supplying 400mA of charge current to a 4.2V Li-Ion battery. If a higher battery voltage is selected, then a lower charge current must be used as the maximum power available is limited. The maximum battery charge current, $I_{CHG(MAX)}$, that may be programmed for a given float voltage, V_{FLOAT}, can be calculated based on the charger efficiency, η_{EFF}, as:

$$I_{CHG(MAX)} \leq \frac{\eta_{EFF} \bullet 2W}{V_{FLOAT}}$$

The charger efficiency, η_{EFF}, depends on the operating conditions and may be estimated using the Buck Efficiency curve in the Typical Performance Characteristics. Do not select a charge current greater than this limit when selecting R_{PROG}.

Input Voltage and Minimum On-Time

The LTC4120 can operate from input voltages up to 40V. The LTC4120 maintains constant frequency operation under most operating conditions. Under certain situations with high input voltage and high switching frequency selected and a low battery voltage, the LTC4120 may not be able to maintain constant frequency operation. These factors, combined with the minimum on-time of the LTC4120, impose a minimum limit on the duty cycle to maintain fixed-frequency operation. The on-time of the top switch is related to the duty cycle (V_{BAT}/V_{IN}) and the switching frequency, f_{OSC} in Hz:

$$t_{ON} = \frac{V_{BAT}}{f_{OSC} \bullet V_{IN}}$$

When operating from a high input voltage with a low battery voltage, the PWM control algorithm may attempt to enforce a duty cycle which requires an on-time lower than the LTC4120 minimum, $t_{MIN(ON)}$. This minimum duty cycle is approximately 18% for 1.5MHz operation or 9% for 750kHz operation. Typical minimum on-time is illustrated in graph G11 in the Typical Performance Characteristics section. If the on-time is driven below $t_{MIN(ON)}$, the charge current and battery voltage remain in regulation, but the switching duty cycle may not remain fixed, and/or the switching frequency may decrease to an integer fraction of its programmed value.

The maximum input voltage allowed to maintain constant frequency operation is:

$$V_{IN(MAX)} = \frac{V_{LOWBAT}}{f_{OSC} \bullet t_{MIN(ON)}}$$

where V_{LOWBAT}, is the lowest battery voltage where the switcher is enabled.

Exceeding the minimum on-time constraint does not affect charge current or battery float voltage, so it may not be of critical importance in most cases and high switching frequencies may be used in the design without any fear of severe consequences. As the sections on Inductor Selection and Capacitor Selection show, high switching frequencies allow the use of smaller board components, thus reducing the footprint of the applications circuit.

Fixed-frequency operation may also be influenced by dropout and Burst Mode operation as discussed previously.

Switching Inductor Selection: L_{SW}

The primary criterion for switching inductor value selection in an LTC4120 charger is the ripple current created in that inductor. Once the inductance value is determined, the saturation current rating for that inductor must be equal to or exceed the maximum peak current in the inductor, $I_{L(PEAK)}$. The peak value of the inductor current is the sum of the programmed charge current, I_{CHG}, plus one-half of the ripple current, ΔI_L. The peak inductor current must also remain below the current limit of the LTC4120, I_{PEAK}:

$$I_{L(PEAK)} = I_{CHG} + \frac{\Delta I_L}{2} < I_{PEAK}$$

APPLICATIONS INFORMATION

The current limit of the LTC4120, I_{PEAK}, is at least 585mA (and at most 1250mA). The typical value of I_{PEAK} is illustrated in graph R_{SNS} Current Limit vs Temperature, in the Typical Performance Characteristics.

For a given input and battery voltage, the inductor value and switching frequency determines the peak-to-peak ripple current amplitude according to the following formula:

$$\Delta I_L = \frac{(V_{IN} - V_{BAT}) \bullet V_{BAT}}{f_{OSC} \bullet V_{IN} \bullet L_{SW}}$$

Ripple current is typically set to be within a range of 20% to 40% of the programmed charge current, I_{CHG}. To obtain a ripple current in this range, select an inductor value using the nearest standard inductance value available that obeys the following formula:

$$L_{SW} \geq \frac{\left(V_{IN(MAX)} - V_{FLOAT}\right) \bullet V_{FLOAT}}{f_{OSC} \bullet V_{IN(MAX)} \bullet \left(30\% \bullet I_{CHG}\right)}$$

Then select an inductor with a saturation current rating at a value greater than $I_{L(PEAK)}$.

Input Capacitor: C_{IN}

The LTC4120 charger is biased directly from the input supply at the V_{IN} pin. This supply provides large switched currents, so a high quality, low ESR decoupling capacitor is recommended to minimize voltage glitches at V_{IN}.

Bulk capacitance is a function of the desired input ripple voltage (ΔV_{IN}), and follows the relation:

$$C_{IN(BULK)} = \frac{I_{CHG} \frac{V_{BAT}}{V_{IN}}}{\Delta V_{IN}} (\mu F)$$

Input ripple voltages (ΔV_{IN}) above 10mV are not recommended. 10µF is typically adequate for most charger applications, with a voltage rating of 40V.

Reverse Blocking

When a fully charged battery is suddenly applied to the BAT pin, a large in-rush current charges the C_{IN} capacitor through the body diode of the LTC4120 topside power switch. While the amplitude of this current can exceed several Amps, the LTC4120 will survive provided the battery voltage is below the maximum value of 11V. To completely eliminate this current, a blocking P-channel MOSFET can be placed in series with the BAT pin. When the battery is the only source of power, this PFET also serves to decrease battery drain current due to any load placed at V_{IN}. As shown in Figure 15, the PFET body diode serves as the blocking component since $\overline{CHRG}$ is high impedance when the battery voltage is greater than the input voltage. When $\overline{CHRG}$ pulls low, i.e. during most of a normal charge cycle, the PFET is on to reduce power dissipation. This PFET requires a forward current rating equal to the programmed charge current and a reverse breakdown voltage equal to the programmed float voltage. Figure 15 illustrates how to add a blocking PFET connected with the LTC4120.

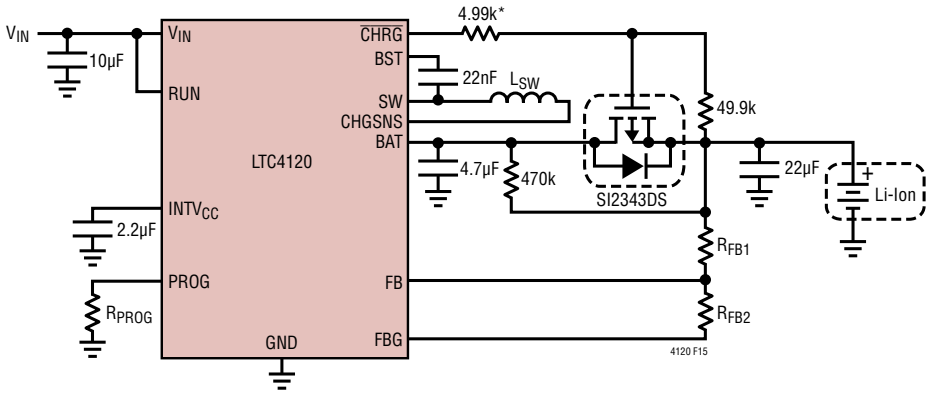

*ADD 4.99k WHEN MAX BAT VOLTAGE APPROACHES 85% OF VGS LIMIT FOR Si2343.

Figure 15. Reverse Blocking with a P-Channel MOSFET in Series with the BAT Pin

APPLICATIONS INFORMATION

BAT Capacitor and Output Ripple: C_{BAT}

The LTC4120 charger output requires bypass capacitance connected from BAT to GND (C_{BAT}). A 22µF ceramic capacitor is required for all applications. In systems where the battery can be disconnected from the charger output, additional bypass capacitance may be desired. In this type of application, excessive ripple and/or low amplitude oscillations can occur without additional output bulk capacitance. For optimum stability, the additional bulk capacitance should also have a small amount of ESR. For these applications, place a 100µF low ESR non-ceramic capacitor (chip tantalum or organic semiconductor capacitors such as Sanyo OS-CONs or POSCAPs) from BAT to GND, in parallel with the 22µF ceramic bypass capacitor, or use large ceramic capacitors with an additional series ESR resistor of less than 1Ω. This additional bypass capacitance may also be required in systems where the battery is connected to the charger with long wires. The voltage rating of all capacitors applied to C_{BAT} must meet or exceed the battery float voltage.

Boost Supply Capacitor: C_{BST}

The BOOST pin provides a bootstrapped supply rail that provides power to the top gate drivers. The operating voltage of the BOOST pin is internally generated from $INTV_{CC}$ whenever the SW pin pulls low. This provides a floating voltage of $INTV_{CC}$ above SW that is held by a capacitor tied from BOOST to SW. A low ESR ceramic capacitor of 10nF to 22nF is sufficient for C_{BST}, with a voltage rating of 6V.

$INTV_{CC}$ Supply and Capacitor: C_{INTVCC}

Power for the top and bottom gate drivers and most other internal circuitry is derived from the $INTV_{CC}$ pin. A low ESR ceramic capacitor of 2.2µF is required on the $INTV_{CC}$ pin. The $INTV_{CC}$ supply has a relatively low current limit (about 20mA) that is dialed back when $INTV_{CC}$ is low to reduce power dissipation. Do not use the $INTV_{CC}$ voltage to supply power for any external circuitry apart from the NTCBIAS network. When the RUN pin is above V_{EN} the $INTV_{CC}$ supply is enabled, and when $INTV_{CC}$ rises above UV_{INTVCC} the charger is enabled.

Calculating Power Dissipation

The user should ensure that the maximum rated junction temperature is not exceeded under all operating conditions. The thermal resistance of the LTC4120 package (θ_{JA}) is 54°C/W; provided that the exposed pad is soldered to sufficient PCB copper area. The actual thermal resistance in the application may depend on forced air cooling or other heat sinking means, and especially the amount of copper on the PCB to which the LTC4120 is attached. The actual power dissipation while charging is approximated by the following formula:

$$P_D \cong (V_{IN} - V_{BAT}) \bullet I_{TRKL} + V_{IN} \bullet I_{IN(SWITCHING)} + R_{SNS} \bullet I_{CHG}^2 + R_{DS(ON)(TOP)} \bullet \frac{V_{BAT}}{V_{IN}} \bullet I_{CHG}^2 + R_{DS(ON)(BOT)} \bullet \left(1 - \frac{V_{BAT}}{V_{IN}}\right) \bullet I_{CHG}^2$$

During trickle charge ($V_{BAT} < V_{TRKL}$) the power dissipation may be significant as I_{TRKL} is typically 10mA, however during normal charging the I_{TRKL} term is zero.

The junction temperature can be estimated using the following formula:

$$T_J = T_A + P_D \bullet \theta_{JA}$$

where T_A is the ambient operating temperature.

Significant power is also consumed in the transmitter electronics. The large AC voltage generated across the L_X and C_X tank results in power being dissipated in the DC resistance of the L_X coil and the ESR of the C_X capacitor. The large induced magnetic field in the L_X coil may also induce heating in nearby metallic objects.

PCB Layout

To prevent magnetic and electrical field radiation and high frequency resonant problems, proper layout of the components connected to the LTC4120 is essential. For maximum efficiency, the switch node rise and fall times

APPLICATIONS INFORMATION

should be minimized. The following PCB design priority list will help insure proper topology. Layout the PCB using the guidelines listed below in this specific order.

1. Keep foreign metallic objects away from the transmitter coil. Metallic objects in proximity to the transmit coil will suffer from induction heating and will be a source of power loss. With the exception of a ferrite shield that can be used to improve the coupling from transmitter coil to receiver coil when placed behind the transmitter coil.

   Advanced transmitters using LTC4125 include features to detect the presence of foreign metallic objects that mitigates this issue.

2. V_{IN} input capacitor should be placed as close as possible to the IN and GND pins, with the shortest copper traces possible and a via connection to the GND plane

3. Place the switching inductor as close as possible to the SW pin. Minimize the surface area of the SW pin node. Make the trace width the minimum needed to support the programmed charge current, and ensure that the spacing to other copper traces be maximized to reduce capacitance from the SW node to any other node.

4. Place the BAT capacitor adjacent to the BAT pin and ensure that the ground return feeds to the same copper that connects to the input capacitor ground before connecting back to system ground.

5. Route analog ground (RUN ground and $INTV_{CC}$ capacitor ground) as a separate trace back to the LTC4120 GND pin before connecting to any other ground.

6. Place the $INTV_{CC}$ capacitor as close as possible to the $INTV_{CC}$ pin with a via connection to the GND plane.

7. Route the DHC trace with sufficient copper and vias to support 350mA of RMS current, and ensure that the spacing from the DHC node to other copper traces be maximized to reduce capacitance and radiated EMI from the DHC node to other sensitive nodes.

8. It is important to minimize parasitic capacitance on the PROG pin. The trace connecting to this pin should be as short as possible with extra wide spacing from adjacent copper traces.

9. Minimize capacitive coupling to GND from the FB pin.

10. Maximize the copper area connected to the exposed pad. Place via connections directly under the exposed pad to connect a large copper ground plane to the LTC4120 to improve heat transfer.

Design Examples

The design example illustrated in Figure 17, reviews the design of the resonant coupled power transfer charger application. First the design of the wireless power receiver circuit is described. Then consider the design for the charger function given the maximum input voltage, a battery float voltage of 8.2V, and a charge current of 200mA for the LTC4120. This example also demonstrates how to select the switching inductance value to avoid discontinuous conduction; where switching noise increases.

The wireless power receiver is formed by the tuned network LR and C2P, C2S. This tuned network automatically modulates the resonance of the tank with the DHC pin of the LTC4120 to optimize power transfer. The resonant frequency of the tank should match the oscillation frequency of the transmitter. Given the transmitter shown in Figure 4 this frequency is 130kHz. The tuned receiver resonant frequency is:

$$f_T = \frac{1}{2 \bullet \pi \bullet \sqrt{LR \bullet (C2P + C2S)}} = 127\,kHz$$

In this design example, the de-tuned resonant frequency is:

$$f_D = \frac{1}{2 \bullet \pi \bullet \sqrt{LR \bullet C2S}} = 142kHz$$

f_D should be set between 5% and 15% higher than f_T. A higher level gives more control range but results in more power dissipation.

A 47µH coil is selected for L_R to obtain a turns ratio of 3:1 from the transmitter coil, L_X = 5µH.

Now C2S can be calculated to be 26.7nF. Two standard parallel 50V rated capacitors, 22nF and 4.7nF, provide a value within 1% of the calculated C2S. Now C2P can be calculated to be 6.5nF which can be obtained with

APPLICATIONS INFORMATION

4.7nF and 1.8nF capacitors in parallel. All of the capacitors should be selected with 5% or better tolerance.

The rectifier, D8, D9 and D5 are selected as 50V rated Schottky diodes.

Now consider the design circuit for the LTC4120 charger function. First, the external feedback divider, R_{FB1}/R_{FB2}, is found using standard 1% values:

$$R_{FB1} = \frac{8.2V \bullet 588k}{2.4V} \cong 2.00M$$

$$R_{FB2} = \frac{2.00M \bullet 588k}{2.00M - 588k} \cong 825k$$

With these resistors, and including the resistance of the FBG pin, the battery float voltage is 8.212V.

With an 8.2V float voltage the maximum charge current available is limited by the maximum power available from the RCPT at η_{EFF} = 85% charger efficiency:

$$I_{CHG(MAX)} \leq \frac{85\% \bullet 2W}{8.2V} = 207mA$$

A charge current of 200mA is achieved by selecting a standard 1% R_{PROG} resistor of:

$$R_{PROG} = \frac{h_{PROG} \bullet V_{PROG}}{I_{CHG}} = 6.04k$$

While charging a battery, the resonant receiver is loaded by the charge current, this load reduces the input voltage from the open-circuit value to a typical voltage in a range from 12V (at UVCL) up to about 26V. The amplitude of this voltage depends primarily on the amount of coupling between the transmitter and the receiver, typically this voltage is about 17V.

The maximum loaded input voltage is used to select the operating frequency and influences the value of the switching inductor. The saturation current rating of the switching inductor is selected based on the worst case conditions at the maximum open-circuit voltage.

A typical 2-cell Li-Ion battery pack engages pack protection for V_{BAT} less than 5V, this is the lowest voltage considered for determining the on-time and selecting the 1.5MHz operating frequency.

$$t_{ON} = \frac{5V}{1.5MHz \bullet 17V} = 476ns > t_{MIN(ON)}$$

Now the switching inductor value is calculated. The inductor value is calculated based on achieving a 30% ripple current. The ripple current is calculated at the typical input operating voltage of 17V:

$$L3 > \frac{(17V - 8.2V) \bullet 8.2V}{1.5MHz \bullet 17V \bullet (30\% \bullet 200mA)} = 48\mu H$$

56µH is the next standard inductor value that is greater than this minimum. This inductor value results in a worst-case ripple current at the input open-circuit voltage, $V_{IN(OC)}$. $V_{IN(OC)}$ is estimated based on the transmitter design in Figure 4, at the largest coupling coefficient k = 0.37 as:

$$V_{IN(OC)} = k \bullet n \bullet \pi \bullet V_{IN(TX)}$$

$$V_{IN(OC)} = 0.37 \bullet 3 \bullet 3.14 \bullet 5V = 34.9V$$

$$\Delta I_L = \frac{(34.9V - 8.2V) \bullet 8.2V}{1.5MHz \bullet 56\mu H \bullet 34.9V} = 75mA$$

This results in a worst-case peak inductor current of:

$$I_{L(PEAK)} = I_{CHG} + \frac{\Delta I_L}{2} = 237mA$$

Select an inductor with a saturation current rating greater than the worst-case peak inductor current of 237mA.

Select a 50V rated capacitor for C_{IN} = 10µF to achieve an input voltage ripple of 10mV at the typical operating input voltage of 17V:

$$\Delta V_{IN} = \frac{200mA \bullet \frac{8.2V}{17V}}{10\mu F} = 10mV$$

And select 6V rated capacitors for C_{INTVCC} = 2.2µF, C_{BOOST} = 22nF, and C_{BAT} = 22µF. Optionally add diode D6, a 1W, 39V Zener diode if the coupling from transmitter to receiver coils is not well enough controlled to ensure that V_{IN} remains below 39V when the battery is fully charged.

APPLICATIONS INFORMATION

Finally the RUN pin divider is selected to turn on the charger once the input voltage reaches 11.2V. With R3 = 374k and R4 = 102k the RUN pin reaches 2.4V at V_{IN} = 11.2V. With this RUN pin divider, the LTC4120 is disabled once V_{IN} falls below 10.5V.

For this design example, power dissipation during trickle charge, where the switching charge current is 20mA at V_{BAT} = 3V and I_{IN} switching = 5mA, is calculated as follows:

$$P_D = (20V - 3V) \bullet 10mA + 20V \bullet 5mA$$
$$+0.3\Omega \bullet 0.02A^2 + 0.8\Omega \bullet \frac{3V}{20V} \bullet 0.02A^2$$
$$+0.5\Omega \bullet \left(1 - \frac{3V}{20V}\right) \bullet 0.02A^2$$
$$= 0.27W$$

This dissipated power results in a junction temperature rise of:

$$P_D \bullet \theta_{JA} = 0.27W \bullet 54°C/W = 15°C$$

During regular charging with $V_{BAT} > V_{TRKL}$, the power dissipation reduces to:

$$P_D = 20V \bullet 5mA + 0.3\Omega \bullet 0.2A^2$$
$$+0.8\Omega \bullet \frac{8.2V}{20V} \bullet 0.2A^2$$
$$+0.5\Omega \bullet \left(1 - \frac{8.2V}{20V}\right) \bullet 0.2A^2 = 0.14mW$$

This dissipated power results in a junction temperature rise of 6°C over ambient.

Design Example 2: Operation with the LTC4125

The LTC4125 is a 5W AutoResonant wireless power transmitter that offers several advantages over the simple transmitter shown in Figure 10, including foreign object detection, external overtemperature detection, automatic tuning of switching frequency and transmit power. When operating the LTC4120 receiver with the LTC4125, the DHC pin serves to enable an external shunt regulator that optimizes the input supply voltage to the LTC4120 as shown in Figure 16. For more information on using the LTC4125 see the LTC4125 data sheet.

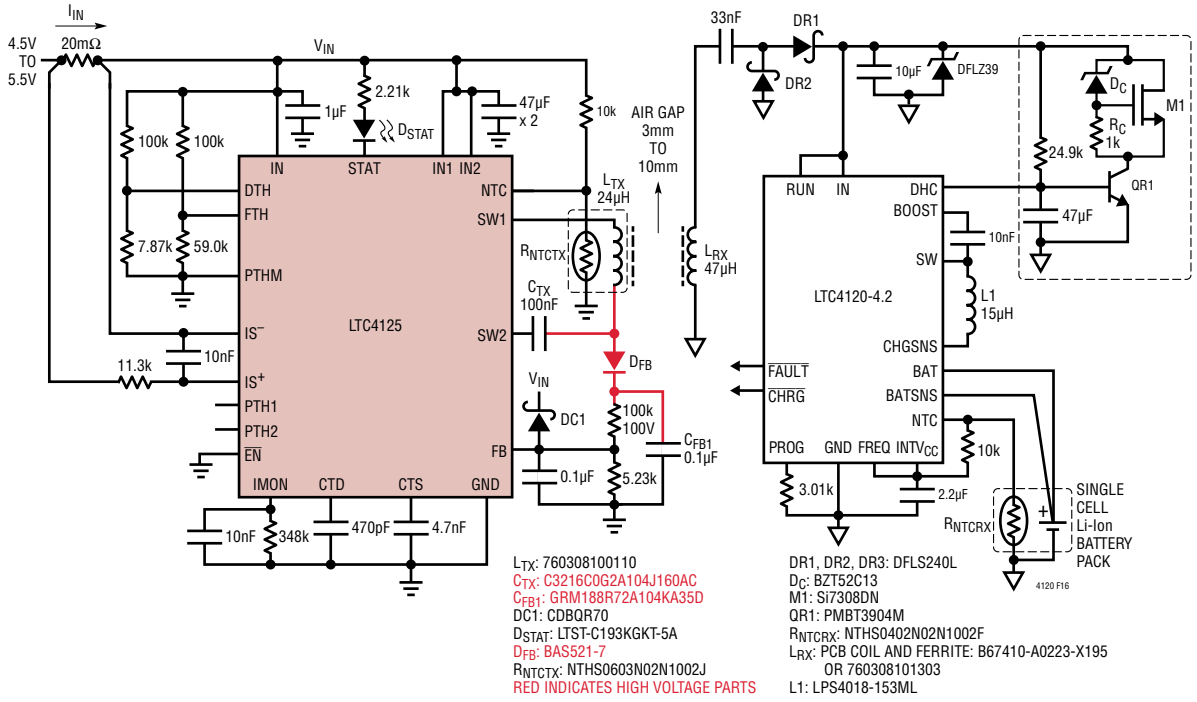

Figure 16. LTC4125 Driving a 24µH Transmit Coil at 103kHz, with 1.3A Input Current Threshold, 119kHz Frequency Limit and 41.5°C Transmit Coil Surface Temperature Limit in a Wireless Power System with LTC4120-4.2 as a 400mA Single Cell Li-Ion Battery Charger at the Receiver

PACKAGE DESCRIPTION

UD Package
16-Lead Plastic QFN (3mm × 3mm)
(Reference LTC DWG # 05-08-1691 Rev Ø)

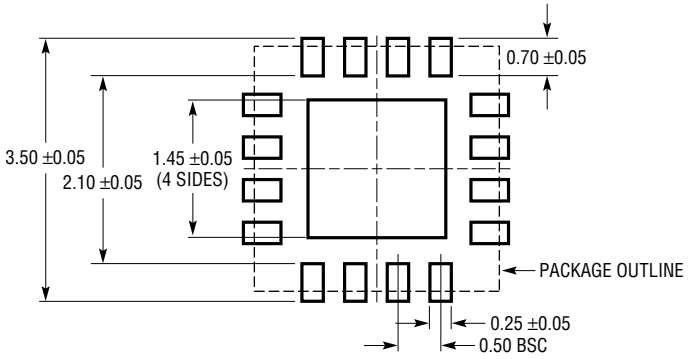

RECOMMENDED SOLDER PAD PITCH AND DIMENSIONS

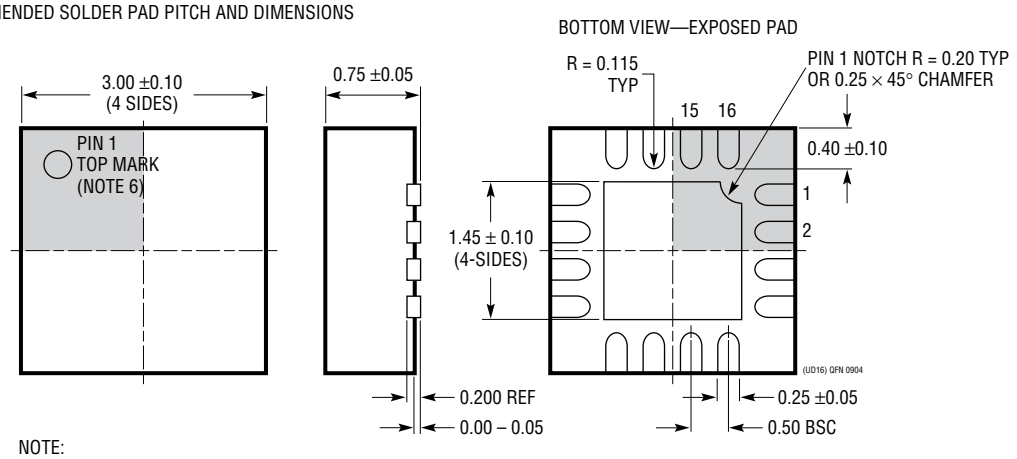

NOTE:
1. DRAWING CONFORMS TO JEDEC PACKAGE OUTLINE MO-220 VARIATION (WEED-2)
2. DRAWING NOT TO SCALE
3. ALL DIMENSIONS ARE IN MILLIMETERS
4. DIMENSIONS OF EXPOSED PAD ON BOTTOM OF PACKAGE DO NOT INCLUDE MOLD FLASH. MOLD FLASH, IF PRESENT, SHALL NOT EXCEED 0.15mm ON ANY SIDE
5. EXPOSED PAD SHALL BE SOLDER PLATED
6. SHADED AREA IS ONLY A REFERENCE FOR PIN 1 LOCATION ON THE TOP AND BOTTOM OF PACKAGE

REVISION HISTORY

REV	DATE	DESCRIPTION	PAGE
A	12/13	Updated Table 4 component values and brands.	20
B	03/14	Removed word “battery” from float voltage range bullet. Modified various specification limits and removed some temp dots. Modified frequency range, resistor values and Note 3. Amended I_{IN} curves. Modified text to reflect typical f_{OSC} values. Updated text for V_{PROG} servo. Amended equation for f_D. Modified I_{CHG} equation. Changed description of End-Of-Charge indication. Modified typical f_{OSC} values. Modified Resonant Converter Selection. Added high voltage pre-regulator schematic. Added Table 4: Recommended Transmitter and High Voltage Pre-Regulator Components. Added Table 5: Recommended Receiver Components. Added Figure 11, PCB Layout of Rx Coil. Added Figure 12, Tx layout: photo of Demo Circuit 1968A. Added Figure 13, Rx layout: photo of Demo Circuit 1967A-B Modified text of f_{OSC} and f_T. Modified f_T equation. Modified equation for t_{ON}, L3, ΔI_L, and $I_{L(PEAK)}$ and changed power dissipation calculations.	1 3 4 7 8 9 14 15 16 17 20 20 20 20 20 20 20 23 28 29
C	05/14	Increased minimum V_{IN} to 12.5V Added fixed 4.2V float version, throughout document, also added electrical parameters for –4.2 Increased I_{FB} specification to TYP 25nA Reduced min RECHG threshold to –38mV Modified V_{PROG} servo voltage spec by +3mV and –3mV Loosened V_{TRKL} threshold voltage spec by –20mV and +10mV Increased TYP V_{TRKL} hysteresis spec to 50mV Changed conditions on I_{SW} specification to IN = Open-Circuit from IN = Float Revised R_{SNS} current limit typical performance characteristics curve Added typical V_{FLOAT} performance characteristics curve Corrected error in $I_{IN(SWITCHING)}$ Current curve (x-axis) Added Block Diagram of –4.2 BATSNS connections Changed V_{IN} labels to IN in Figure 4, 5, and 10 Remove SW inductor selection Tables 6, 7, 8, and 9 Changed location of BAT decoupling cap in Figure 15 with reverse blocking diode Corrected error in L3 equation and substituted correct 56µH inductor	1, 3 1 to 32 3 3 3 4 4 4 5 6 8 11 12, 13, 20 N/A 25 28
D	01/15	Change CBAT from 10µF to 22µF Add Würth P/N for RX coil Add INTER-TECH P/N for TX and RX coils Remove dos on 68µ bias inductor in basic TX schematic for clarity	1, 9, 10, 11, 14, 25, 26, 29 and 32 22 21, 22 12, 20
E	05/15	Clarified Battery Charge Current vs Temperature curve Clarified End-of-Charge and Battery Recharge sections Modified Operation without an Input Supply section Enhanced Reverse Blocking section Modified $INTV_{CC}$ Supply and Capacitor section	6 16 18 25,26 26
F	02/16	Removed $INTV_{CC}$ spec. Moved Note 4 to UV_$INTV_{CC}$ spec. Modified $INTV_{CC}$ pin definition. Included LTC4125 in Applications Information. Added 4.99k Note. Added paragraph and Figure 16 from LTC4125 data sheet. Renumbered Figure 17. Added to Related Parts Table.	3 9 24 25 29 32
G	11/18	Removed references to PowerByProxi.	12, 27

Information furnished by Analog Devices is believed to be accurate and reliable. However, no responsibility is assumed by Analog Devices for its use, nor for any infringements of patents or other rights of third parties that may result from its use. Specifications subject to change without notice. No license is granted by implication or otherwise under any patent or patent rights of Analog Devices.

TYPICAL APPLICATION

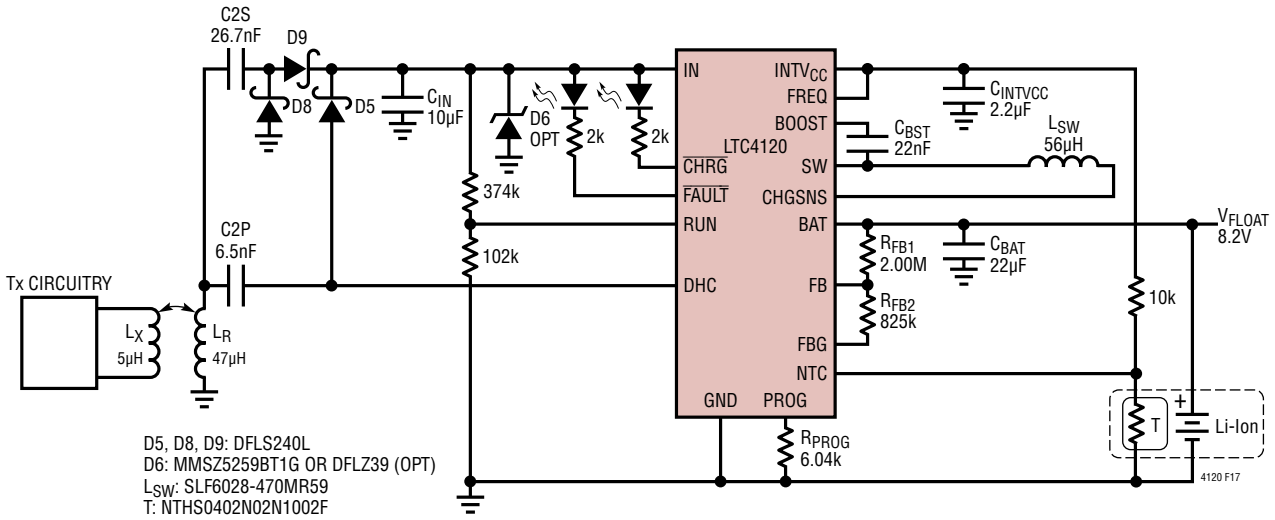

Figure 17. Resonant Coupled Power Transfer Charger Application

RELATED PARTS

PART NUMBER	DESCRIPTION	COMMENTS
AN138	Wireless Power Users Guide	
LTC3335	Nanopower Buck-Boost with Intergrated Coulomb Counter	680nA Input Quiescent Current (Output in Regulation at No Load) 1.8V to 5.5V Input Operating Range, Up to 50mA of Output Current, Up to 90% Efficiency
LT3650-8.2/ LT3650-8.4	Monolithic 2A Switch Mode Non-Synchronous 2-Cell Li-Ion Battery Charger	Standalone 9V ≤ V_{IN} ≤ 32V (40V Absolute Maximum), 1MHz, 2A Programmable Charge Current, Timer or C/10 Termination, Small and Few External Components, 3mm × 3mm DFN-12 Package “-8.2” for 2× 4.1V Float Voltage Batteries, “-8.4” for 2× 4.2V Float Voltage Batteries
LT3650-4.1/ LT3650-4.2	Monolithic 2A Switch Mode Non-Synchronous 1-Cell Li-Ion Battery Charger	Standalone 4.75V ≤ V_{IN} ≤ 32V (40V Absolute Maximum), 1MHz, 2A Programmable Charge Current, Timer or C/10 Termination, Small and Few External Components, 3mm × 3mm DFN-12 Package “-4.1” for 4.1V Float Voltage Batteries, “-4.2” for 4.2V Float Voltage Batteries
LT3652HV	Power Tracking 2A Battery Charger	Input Supply Voltage Regulation Loop for Peak Power Tracking in (MPPT) Solar Applications Standalone, 4.95V ≤ V_{IN} ≤ 34V (40V Absolute Maximum), 1MHz, 2A Charge Current, 3.3V ≤ V_{OUT} ≤ 18V. Timer or C/10 Termination, 3mm × 3mm DFN-12 Package and MSOP-12 Packages
LTC4070	Li-Ion/Polymer Shunt Battery Charger System	Low Operating Current (450nA), 1% Float Voltage Accuracy Over Full Temperature and Shunt Current Range, 50mA Maximum Internal Shunt Current (500mA with External PFET), Pin Selectable Float Voltages: 4.0V, 4.1V, 4.2V. Ultralow Power Pulsed NTC Float Conditioning for Li-Ion/Polymer Protection, 8-Lead (2mm × 3mm) DFN and MSOP
LTC4071	Li-Ion/Polymer Shunt Battery Charger System with Low Battery Disconnect	Integrated Pack Protection, <10nA Low Battery Disconnect Protects Battery From Over-Discharge. Low Operating Current (550nA), 1% Float Voltage Accuracy Over Full Temperature and Shunt Current Range, 50mA Maximum Internal Shunt Current, Pin Selectable Float Voltages: 4.0V, 4.1V, 4.2V. Ultralow Power Pulsed NTC Float Conditioning for Li-Ion/Polymer Protection, 8-Lead (2mm × 3mm) DFN and MSOP
LTC4065/ LTC4065A	Standalone Li-Ion Battery Charger in 2mm × 2mm DFN	4.2V ±0.6% Float Voltage, Up to 750mA Charge Current ; “A” Version Has /ACPR Function. 2mm × 2mm DFN Package
LTC4123	25mA NiMH Wireless Charger-Receiver	Low Minimum Input Voltage: 2.2V, Temperature Compensated Charge Voltage
LTC4125	5W AutoResonant Wireless Power Transmitter	Monolithic AutoResonant Full Bridge Driver. Transmit Power Automatically Adjusts to Receiver Load, Foreign Object Detection, Wide Operating Switching Frequency Range: 50kHz to 250kHz, Input Voltage Range 3V to 5.5V, 20-Lead 4mm × 5mm QFN Package

© ANALOG DEVICES, INC. 2013-2018