Standalone Linear Li-Ion Battery Charger with Thermistor Input

FEATURES

- **Charge Current Programmable Up to 1A**
- **Charges Single-Cell Li-Ion Batteries Directly from USB Port**
- **Preset Charge Voltage with ±0.35% Accuracy**
- **Thermistor Input for Temperature Qualified Charging**
- **Input Supply Present Logic Output**
- **Thermal Regulation Maximizes Charge Rate Without Risk of Overheating**
- **Programmable Charge Current Detection/ Termination**
- **Programmable Charge Termination Timer**
- Smart Pulsing Error Feature
- SmartStart™ Prolongs Battery Life
- 20µA Charger Quiescent Current in Shutdown
- Available in a Low Profile (0.75mm) 10-Lead (3mm × 3mm) DFN Package

APPLICATIONS

- Handheld Computers
- Portable MP3 Players
- Digital Cameras

LT, LTC, LTM, Linear Technology and the Linear logo are registered trademarks and SmartStart, ThinSOT and PowerPath are trademarks of Linear Technology Corporation. All other trademarks are the property of their respective owners. Protected by U.S. Patents including 6522118.

DESCRIPTION

The LTC®4061 is a full-featured, flexible, standalone linear charger for single-cell Lithium-Ion batteries. It is capable of operating within USB power specifications.

Both programmable time and programmable current based termination schemes are available. Furthermore, the $\overline{CHRG}$ open-drain status pin can be programmed to indicate the battery charge state according to the needs of the application. Additional safety features designed to maximize battery lifetime and reliability include NTC battery temperature sensing and the SmartStart charging algorithm.

No external sense resistor or external blocking diode is required for charging due to the internal MOSFET architecture. Internal thermal feedback regulates the charge current to maintain a constant die temperature during high power operation or high ambient temperature conditions. The charge current is programmed with an external resistor. With power applied, the LTC4061 can be put into shutdown mode to reduce the supply current to 20µA and the battery drain current to less than 5µA.

Other features include smart recharge, USB $\overline{C/5}$ current programming input, undervoltage lockout and AC Present logic output.

TYPICAL APPLICATION

800mA Single-Cell Li-Ion Battery Charger (C/10 Termination)

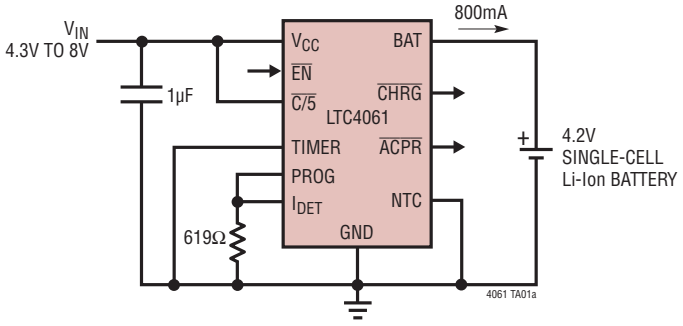

Complete Charge Cycle (1100mAh Battery)

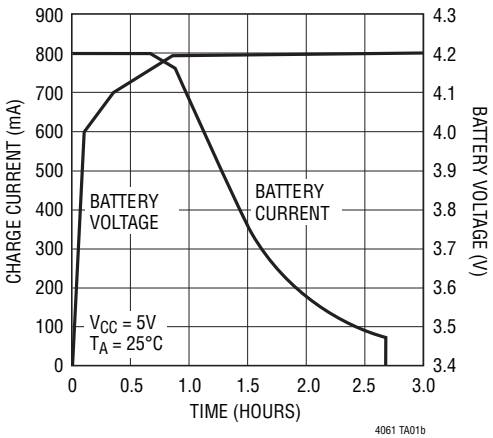

ABSOLUTE MAXIMUM RATINGS

(Note 1)

Input Supply Voltage (V_{CC}) ..... –0.3V to 10V
$\overline{EN}$, $\overline{ACPR}$, $\overline{CHRG}$, NTC, PROG,
$\overline{C/5}$, BAT ..... –0.3V to 10V
TIMER, I_{DET} ..... –0.3V to V_{CC} + 0.3V
BAT Short-Circuit Duration ..... Continuous
V_{CC} Pin Current 1A
BAT Pin Current 1A
Maximum Junction Temperature (Note 5) ..... 125°C
Operating Temperature Range (Note 2) ... –40°C to 85°C
Storage Temperature Range ..... –65°C to 125°C

PIN CONFIGURATION

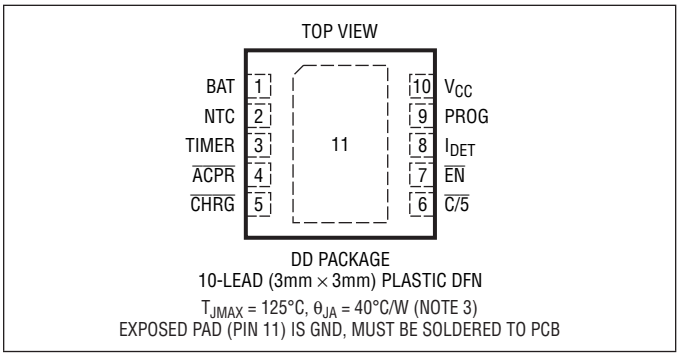

DD PACKAGE
10-LEAD (3mm × 3mm) PLASTIC DFN
T_{JMAX} = 125°C, θ_{JA} = 40°C/W (NOTE 3)
EXPOSED PAD (PIN 11) IS GND, MUST BE SOLDERED TO PCB

ORDER INFORMATION

LEAD FREE FINISH	TAPE AND REEL	PART MARKING	PACKAGE DESCRIPTION	TEMPERATURE RANGE
LTC4061EDD#PBF	LTC4061EDD#TRPBF	LBJS	10-Lead (3mm × 3mm) Plastic DFN	–40°C to 85°C

Consult LTC Marketing for parts specified with wider operating temperature ranges.
Consult LTC Marketing for information on non-standard lead based finish parts.

For more information on lead free part marking, go to: http://www.linear.com/leadfree/
For more information on tape and reel specifications, go to: http://www.linear.com/tapeandreel/

ELECTRICAL CHARACTERISTICS

The ● denotes the specifications which apply over the full operating temperature range, otherwise specifications are at T_A = 25°C. V_{CC} = 5V, unless otherwise noted.

SYMBOL	PARAMETER	CONDITIONS		MIN	TYP	MAX	UNITS
V_{CC}	Input Supply Voltage		●	4.3		8	V
I_{CC}	Input Supply Current	Charge Mode (Note 4), R_{PROG} = 10k Standby Mode, Charge Terminated Shutdown ($\overline{EN}$ = 5V, V_{CC} < V_{BAT} or V_{CC} < V_{UV})	● ● ●		240 130 20	500 300 50	µA µA µA
V_{FLOAT}	V_{BAT} Regulated Output Voltage	 0 ≤ T_A ≤ 85°C	 	4.185 4.175	4.2 4.2	4.215 4.225	V V
I_{BAT}	BAT Pin Current	R_{PROG} = 10k, Constant Current Mode R_{PROG} = 1.25k, Constant Current Mode Standby Mode, Charge Terminated, V_{BAT} = 4.2V Shutdown Mode, V_{BAT} = 4.2V	● ● ● ●	93 760	100 800 –3.5 ±1	107 840 –7 ±5	mA mA µA µA
V_{PROG}	PROG Pin Voltage	R_{PROG} = 10k, Constant Current Mode R_{PROG} = 1.25k, Constant Current Mode		0.97 0.97	1 1	1.03 1.03	V V
$V_{\overline{ACPR}}$	$\overline{ACPR}$ Output Low Voltage	$I_{\overline{ACPR}}$ = 5mA			0.1	0.25	V
$V_{\overline{CHRG}}$	$\overline{CHRG}$ Output Low Voltage	$I_{\overline{CHRG}}$ = 5mA			0.1	0.25	V
I_{TRIKL}	Trickle Charge Current	V_{BAT} < V_{TRIKL}, R_{PROG} = 10k V_{BAT} < V_{TRIKL}, R_{PROG} = 1.25k		6 60	10 80	14 100	mA mA
V_{TRIKL}	Trickle Charge Threshold Voltage	V_{BAT} Rising Hysteresis		2.8	2.9 100	3	V mV
V_{UV}	V_{CC} Undervoltage Lockout Voltage	From Low to High Hysteresis		3.7	3.8 200	3.9	V mV
V_{ASD}	V_{CC} – V_{BAT} Lockout Threshold Voltage	V_{CC} from Low to High, V_{BAT} = 4.3V V_{CC} from High to Low, V_{BAT} = 4.3V		145 10	190 45	230 75	mV mV

ELECTRICAL CHARACTERISTICS

The ● denotes the specifications which apply over the full operating temperature range, otherwise specifications are at T_A = 25°C. V_{CC} = 5V, unless otherwise noted.

SYMBOL	PARAMETER	CONDITIONS		MIN	TYP	MAX	UNITS
$R_{\overline{EN}}$	$\overline{EN}$ Pin Pull-Down Resistor		●	2	3.4	5	MΩ
$V_{\overline{EN}}$	$\overline{EN}$ Input Threshold Voltage	$\overline{EN}$ Rising, 4.3V < V_{CC} < 8V Hysteresis		0.4	0.7 70	1	V mV
V_{CT}	Charge Termination Mode Threshold Voltage	V_{TIMER} from High to Low Hysteresis		0.4	0.7 50	1	V mV
V_{UT}	User Termination Mode Threshold Voltage	V_{TIMER} from Low to High Hysteresis		3.9	4.2 50		V mV
I_{DETECT}	Charge Current Detection Threshold	R_{DET} = 1k, 0 ≤ T_A ≤ 85°C R_{DET} = 2k, 0 ≤ T_A ≤ 85°C R_{DET} = 10k, 0 ≤ T_A ≤ 85°C R_{DET} = 20k, 0 ≤ T_A ≤ 85°C		90 45 8 3.8	100 50 10 5	110 55 12 6.2	mA mA mA mA
ΔV_{RECHRG}	Recharge Threshold Voltage	V_{FLOAT} – V_{RECHRG}, 0 ≤ TA ≤ 85°C		65	100	135	mV
t_{SS}	Soft-Start Time	I_{BAT} from 0 to $I_{\overline{CHRG}}$			100		µs
t_{TERM}	Termination Comparator Filter Time	Current Termination Mode		0.8	1.5	2.5	ms
t_{RECHRG}	Recharge Comparator Filter Time			3	7	14	ms
t_{TIMER}	Charge Cycle Time	C_{TIMER} = 0.1µF		2.55	3	3.45	hr
$R_{\overline{C/5}}$	$\overline{C/5}$ Pin Pull-Down Resistor		●	2	3.4	5	MΩ
$V_{\overline{C/5}}$	$\overline{C/5}$ Input Threshold Voltage	$\overline{C/5}$ Rising, 4.3V < V_{CC} < 8V Hysteresis		0.4	0.7 70	1	V mV
$V_{NTC-HOT}$	NTC Pin Hot Threshold Voltage	V_{NTC} Falling V_{NTC} Rising			0.35 • V_{CC} 0.36 • V_{CC}		V V
$V_{NTC-COLD}$	NTC Pin Cold Threshold Voltage	V_{NTC} Rising V_{NTC} Falling			0.76 • V_{CC} 0.75 • V_{CC}		V V
$V_{NTC-DIS}$	NTC Pin Disable Threshold Voltage	V_{NTC} Falling Hysteresis		70	85 50	100	mV mV
$f_{\overline{CHRG}}$	NTC Fault Pulsing Frequency	Current/User Termination Mode Time Termination Mode C_{TIMER} = 0.1µF		 1	1.5 1.5	 2	Hz Hz
T_{LIM}	Junction Temperature in Constant Temperature Mode				105		°C
R_{ON}	Power FET On-Resistance (Between V_{CC} and $_{BAT}$)	V_{BAT} = 3.85V, I_{CC} = 175mA, R_{PROG} = 2k			375		mΩ

Note 1: Stresses beyond those listed under Absolute Maximum Ratings may cause permanent damage to the device. Exposure to any Absolute Maximum Rating condition for extended periods may affect device reliability and lifetime.

Note 2: The LTC4061 is guaranteed to meet performance specifications from 0°C to 70°C. Specifications over the –40°C to 85°C operating temperature range are assured by design, characterization and correlation with statistical process controls.

Note 3: Failure to correctly solder the exposed pad of the package to the PC board will result in a thermal resistance much higher than 40°C/W.

Note 4: Supply current includes PROG pin current and I_{DET} pin current (approximately 100µA each) but does not include any current delivered to the battery through the BAT pin (approximately 100mA).

Note 5: This IC includes overtemperature protection that is intended to protect the device during momentary overload conditions. Overtemperature protection will become active at a junction temperature greater than the maximum operating temperature. Continuous operation above the specified maximum operating junction temperature may impair device reliability.

TYPICAL PERFORMANCE CHARACTERISTICS

Battery Regulated Output (Float) Voltage vs Charge Current

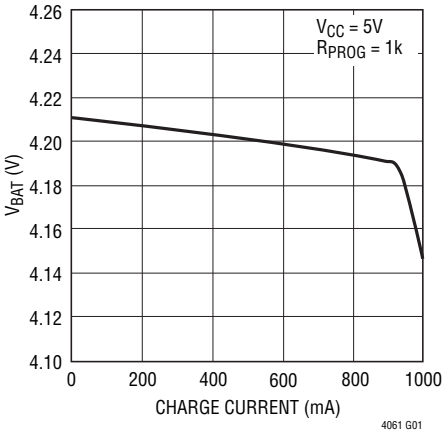

Battery Regulated Output (Float) Voltage vs Temperature

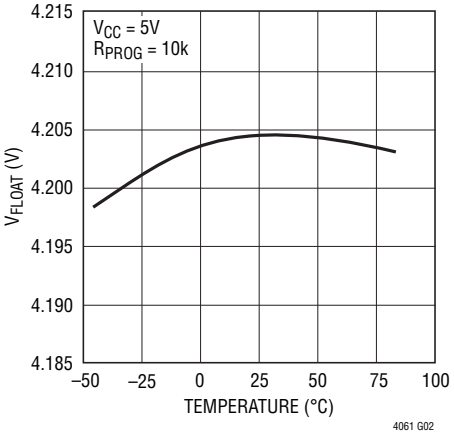

Battery Regulated Output (Float) Voltage vs Supply Voltage

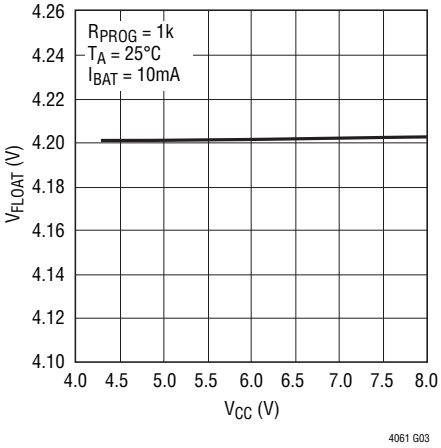

Charge Current vs PROG Pin Voltage

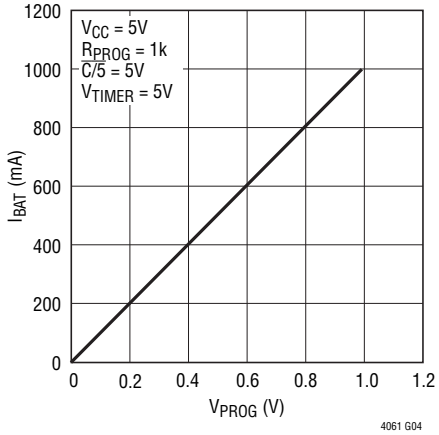

PROG Pin Voltage vs Temperature (Constant-Current Mode)

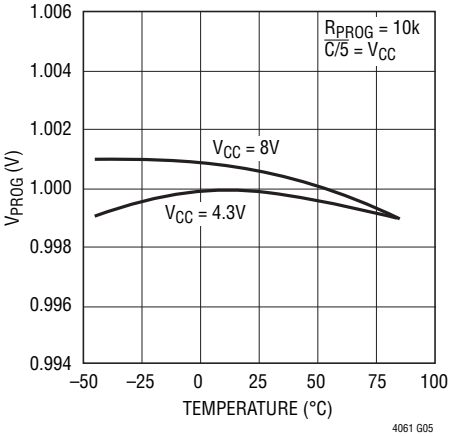

PROG Pin Voltage vs V_{CC} (Constant-Current Mode)

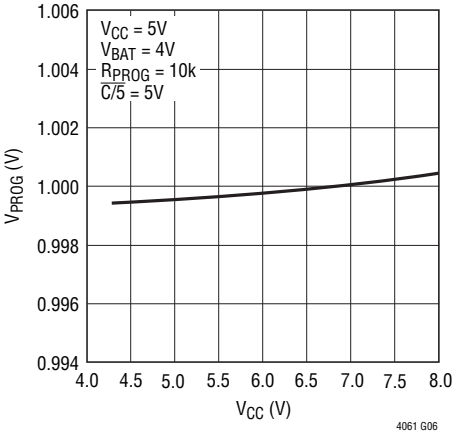

Trickle Charge Current vs Temperature

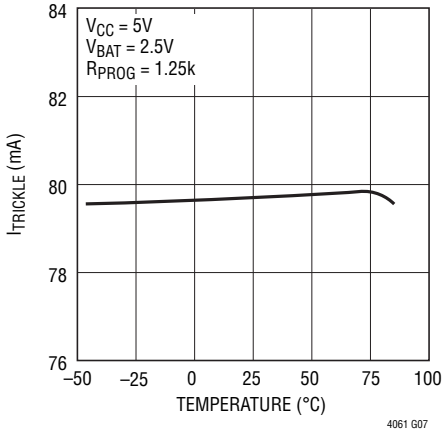

Trickle Charge Threshold Voltage vs Temperature

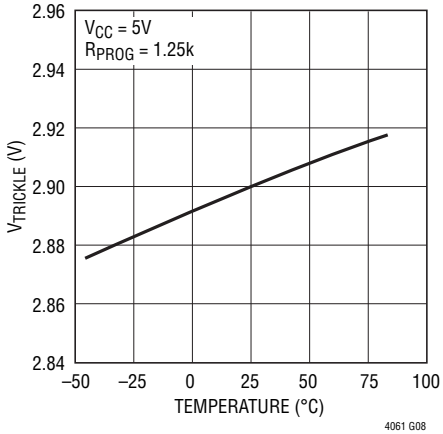

Charge Current vs Battery Voltage

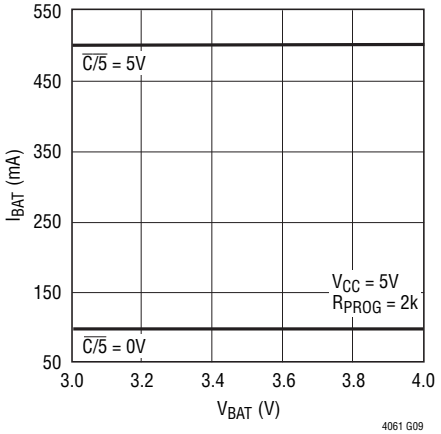

TYPICAL PERFORMANCE CHARACTERISTICS

Internal Charge Timer vs Temperature

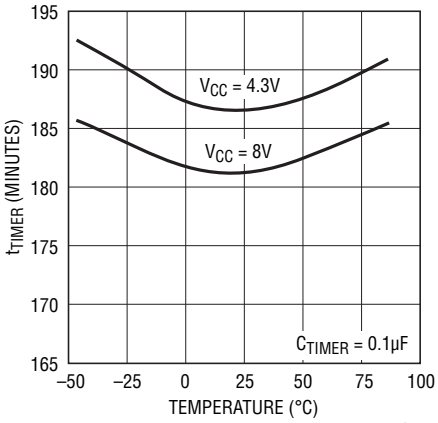

NTC Fault Pulsing Frequency vs V_{CC}

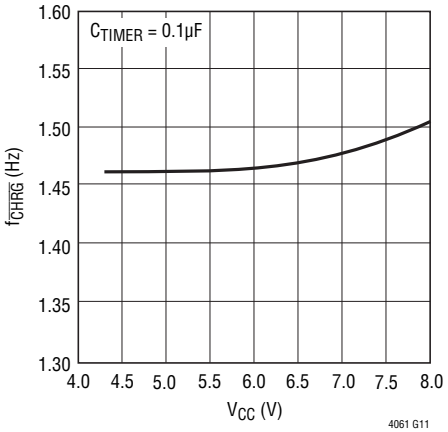

NTC Fault Pulsing Frequency vs Temperature

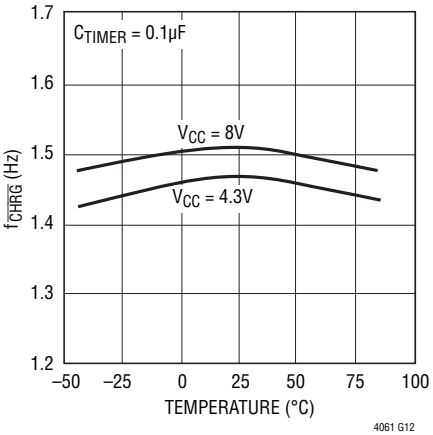

Charge Current vs Ambient Temperature with Thermal Regulation

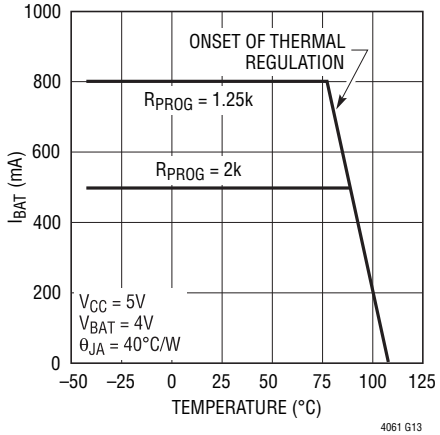

Charge Current vs Supply Voltage

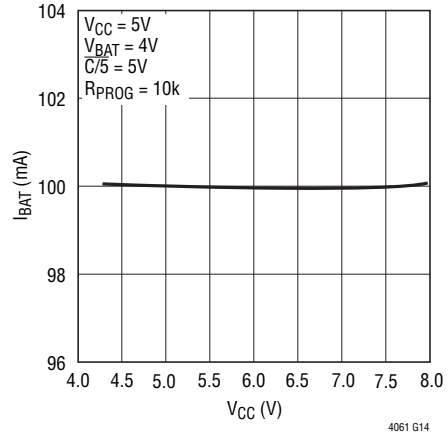

Recharge Threshold Voltage vs Temperature

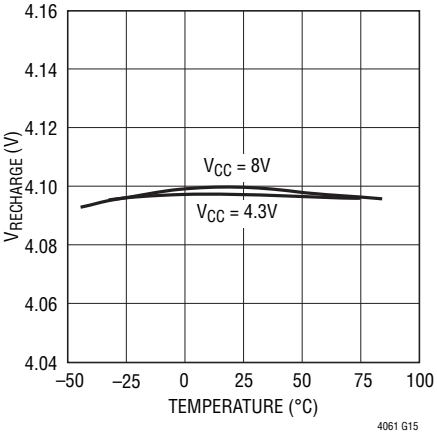

Power FET On-Resistance vs Temperature

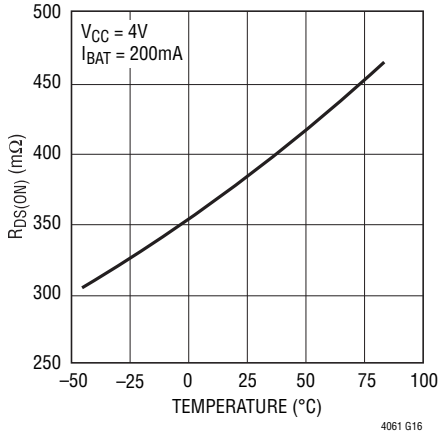

Undervoltage Lockout Voltage vs Temperature

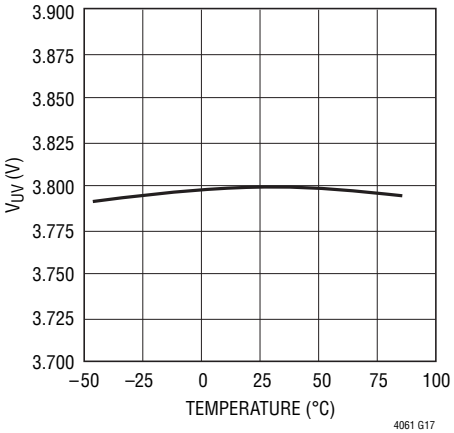

Charge Current vs Battery Voltage

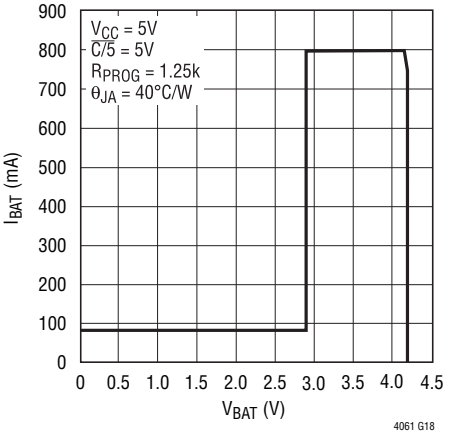

TYPICAL PERFORMANCE CHARACTERISTICS

$\overline{EN}$ Pin Pulldown Resistance vs Temperature

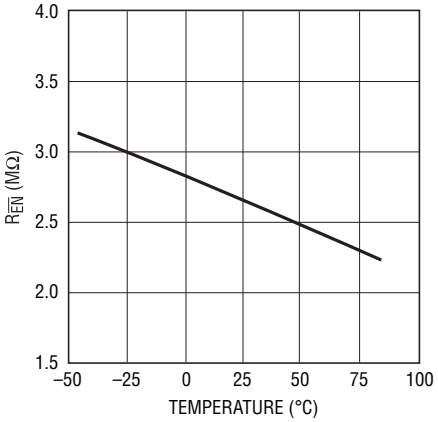

4061 G19

$\overline{C/5}$ Pin Pulldown Resistance vs Temperature

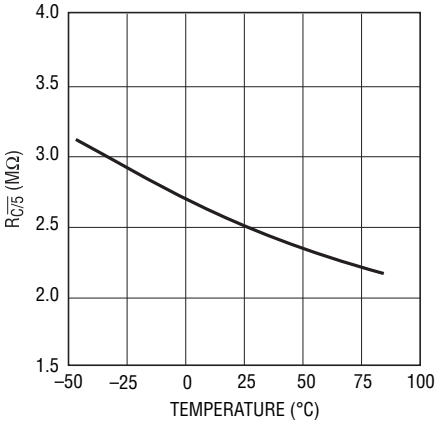

4061 G20

$\overline{EN}$ Pin Threshold Voltage (On-to-Off) vs Temperature

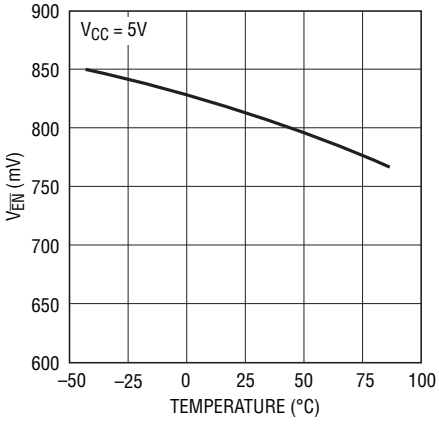

4061 G21

$\overline{C/5}$ Pin Threshold Voltage (High-to-Low) vs Temperature

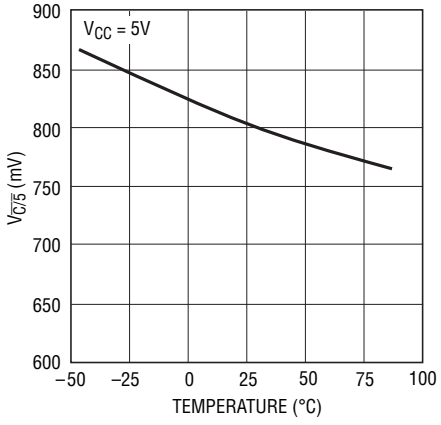

4061 G22

Shutdown Supply Current vs Temperature and V_{CC}

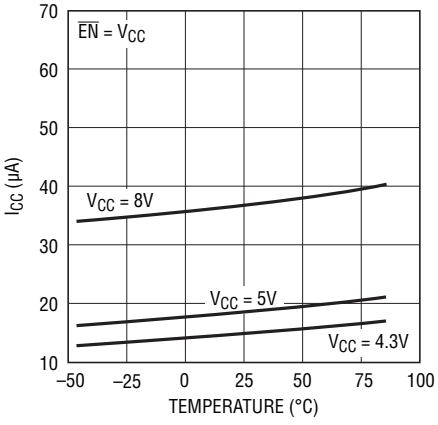

4061 G23

$\overline{ACPR}$ Pin I-V Curve

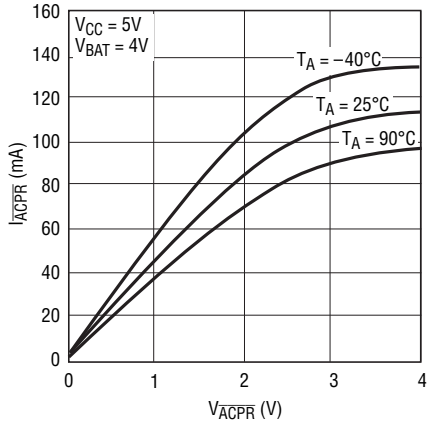

4061 G24

$\overline{CHRG}$ Pin Output Low Voltage vs Temperature

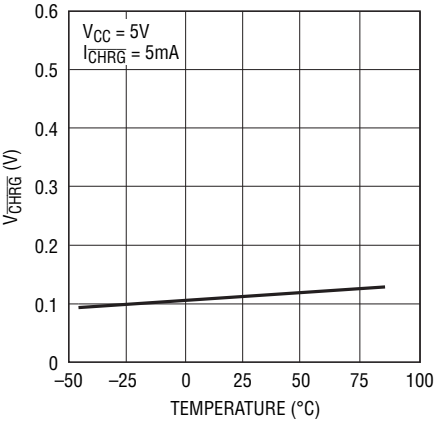

4061 G25

$\overline{ACPR}$ Pin Output Low Voltage vs Temperature

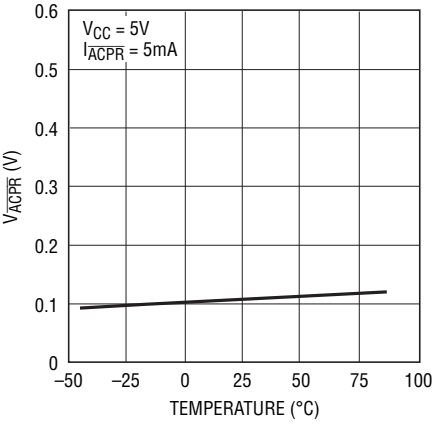

4061 G26

$\overline{CHRG}$ Pin I-V Curve

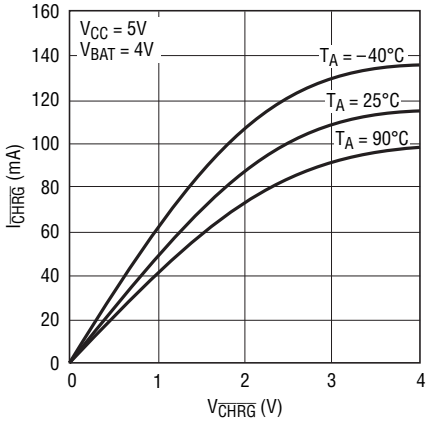

4061 G27

PIN FUNCTIONS

BAT (Pin 1): Charge Current Output. This pin provides charge current to the battery and regulates the final float voltage to 4.2V.

NTC (Pin 2): Input to the NTC (Negative Temperature Coefficient) Thermistor Temperature Monitoring Circuit. Under normal operation, connect a thermistor from the NTC pin to ground and a resistor of equal value from the NTC pin to V_{CC}. When the voltage at this pin drops below 0.35 • V_{CC} at hot temperatures or rises above 0.76 • V_{CC} at cold, charging is suspended, the internal timer is frozen and the $\overline{CHRG}$ pin output will start to pulse at 1.5Hz. Pulling this pin below 0.016 • V_{CC} disables the NTC feature. There is approximately 2°C of temperature hysteresis associated with each of the input comparators thresholds.

TIMER (Pin 3): Timer Program and Termination Select Pin. This pin selects which method is used to terminate the charge cycle. Connecting a capacitor, C_{TIMER}, to ground selects charge time termination. The charge time is set by the following formula:

$$\text{TIME (HOURS)} = 3\ \text{HOURS} \bullet \frac{C_{TIMER}}{0.1\mu F} \text{ or}$$

$$C_{TIMER} = 0.1\mu F \bullet \frac{\text{TIME (HOURS)}}{3\ \text{(HOURS)}}$$

Connecting the TIMER pin to ground selects charge current termination, while connecting the pin to V_{CC} selects user termination. See Applications Information for more information on current and user termination.

$\overline{ACPR}$ (Pin 4): Open-Drain Power Supply Present Status Output. The power supply status indicator pin has two states: pull-down and high impedance. This output can be used as a logic interface or as a LED driver. In the pull-down state, an NMOS transistor capable of sinking 10mA pulls down on the $\overline{ACPR}$ pin. The state of this pin is dependent on the value of V_{CC} and BAT: it requires that V_{CC} is 190mV greater than V_{BAT} and greater than V_{UVLO}. See Applications Information.

$\overline{CHRG}$ (Pin 5): Open-Drain Charge Status Output. The charge status indicator pin has three states: pull-down, pulse at 1.5Hz or 6Hz and high impedance. This output can be used as a logic interface or as a LED driver. In the pull-down state, an NMOS transistor capable of sinking 10mA pulls down on the $\overline{CHRG}$ pin. The state of this pin depends on the value of I_{DETECT} as well as the termination method being used and the state of the NTC pin. See Applications Information.

$\overline{C/5}$ (Pin 6): $\overline{C/5}$ Enable Input. Used to control the amount of current drawn from the USB port. A logic high on the $\overline{C/5}$ pin sets the current limit to 100% of the current programmed by the PROG pin. A logic low on the $\overline{C/5}$ pin sets the current limit to 20% of the current programmed by the PROG pin. An internal 3MΩ pull-down resistor defaults the $\overline{C/5}$ pin to its low current state.

$\overline{EN}$ (Pin 7): Charger Enable Input. A logic high on the $\overline{EN}$ pin places the charger into shutdown mode, where the input quiescent current is less than 50µA. A logic low on this pin enables charging. An internal 3MΩ pull-down resistor to ground defaults the charger to its enabled state.

I_{DET} (Pin 8): Current Detection Threshold Program Pin. The current detection threshold, I_{DETECT}, is set by connecting a resistor, R_{DETECT}, to ground. I_{DETECT} is set by the following formula:

$$I_{DETECT} = \frac{R_{PROG}}{10R_{DET}} \bullet I_{CHG} = \frac{100V}{R_{DET}} \text{ or}$$

$$R_{DET} = \frac{100V}{I_{DETECT}}$$

The $\overline{CHRG}$ pin becomes high impedance when the charge current drops below I_{DETECT}. I_{DETECT} can be set to 1/10th the programmed charge current by connecting I_{DET} directly to PROG. If the I_{DET} pin is not connected, the $\overline{CHRG}$ output remains in its pull-down state until the charge time elapses and terminates the charge cycle. See Applications Information.

This pin is clamped to approximately 2.4V. Driving this pin to voltages beyond the clamp voltage should be avoided.

PROG (Pin 9): Charge Current Program and Charge Current Monitor. The charge current is set by connecting a

PIN FUNCTIONS

resistor, R_{PROG}, to ground. When charging in constant current mode, this pin servos to 1V. The voltage on this pin can be used to measure the charge current using the following formula:

$$I_{BAT} = \frac{V_{PROG}}{R_{PROG}} \bullet 1000$$

V_{CC} (Pin 10): Positive Input Supply Voltage. Provides power to the battery charger. This pin should be bypassed with a 1µF capacitor.

GND (Exposed Pad Pin 11): Ground. This pin is the back of the exposed pad package and must be soldered to the PCB copper for minimal thermal resistance.

BLOCK DIAGRAM

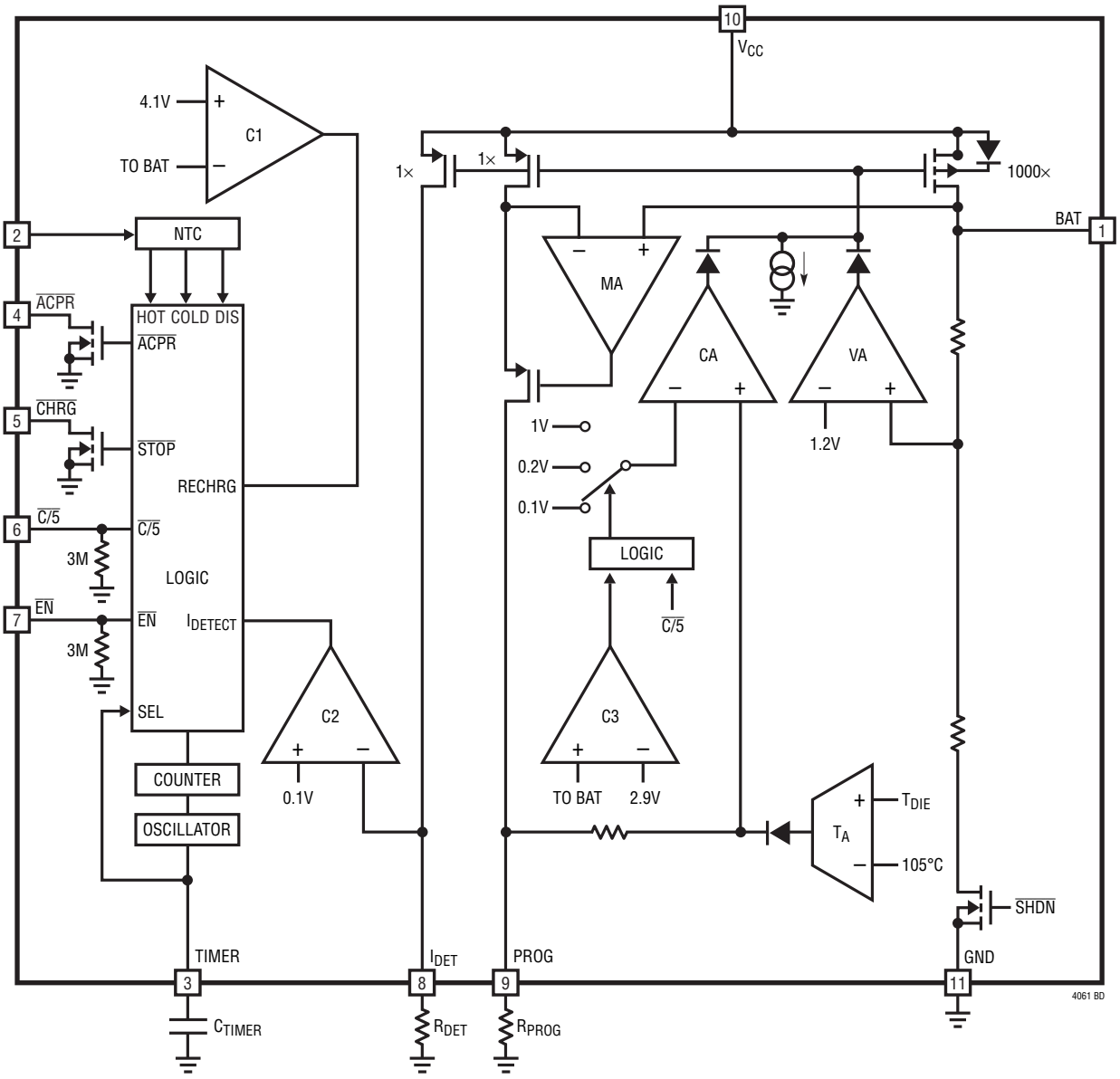

OPERATION

The LTC4061 is designed to charge single-cell lithium-ion batteries. Using the constant current/constant voltage algorithm, the charger can deliver up to 1A of charge current with a final float voltage accuracy of ±0.35%. The LTC4061 includes an internal P-channel power MOSFET and thermal regulation circuitry. No blocking diode or external sense resistor is required; thus, the basic charger circuit requires only two external components.

Normal Operation

The charge cycle begins when the voltage at the V_{CC} pin rises above the UVLO level and a discharged battery is connected to BAT. If the BAT pin voltage is below 2.9V, the charger enters trickle charge mode. In this mode, the LTC4061 supplies 1/10th of the programmed charge current in order to bring the battery voltage up to a safe level for full current charging.

Once the BAT pin voltage rises above 2.9V, the charger enters constant current mode, where the programmed charge current is supplied to the battery. When the BAT pin approaches the final float voltage (4.2V), the LTC4061 enters constant voltage mode and the charge current decreases as the battery becomes fully charged.

The LTC4061 offers several methods with which to terminate a charge cycle. Connecting an external capacitor to the TIMER pin activates an internal timer that stops the charge cycle after the programmed time period has elapsed. Grounding the TIMER pin and connecting a resistor to the I_{DET} pin causes the charge cycle to terminate once the charge current falls below a set threshold when the charger is in constant voltage mode. Connecting the TIMER pin to V_{CC} disables internal termination, allowing external charge user termination through the $\overline{EN}$ input. See Applications Information for more information on charge termination methods.

Programming Charge Current

The charge current is programmed using a single resistor from the PROG pin to ground. When the charger is in the constant current mode, the voltage on the PROG pin is 1V. The battery charge current is 1000 times the current out of the PROG pin. The program resistor and the charge current are calculated by the following equations:

$$R_{PROG} = \frac{1000V}{I_{CHG}}, I_{CHG} = \frac{1000V}{R_{PROG}}$$

The charge current out of the BAT pin can be determined at any time by monitoring the PROG pin voltage and applying the following equation:

$$I_{BAT} = \frac{V_{PROG}}{R_{PROG}} \bullet 1000$$

SmartStart

When the LTC4061 is initially powered on or brought out of shutdown mode, the charger checks the battery voltage. If the BAT pin is below the recharge threshold of 4.1V (which corresponds to approximately 80-90% battery capacity), the LTC4061 enters charge mode and begins a full charge cycle. If the BAT pin is above 4.1V, the LTC4061 enters standby mode and does not begin charging. This feature reduces the number of unnecessary charge cycles, prolonging battery life.

Automatic Recharge

When the charger is in standby mode, the LTC4061 continuously monitors the voltage on the BAT pin. When the BAT pin voltage drops below 4.1V, the charge cycle is automatically restarted and the internal timer is reset to 50% of the programmed charge time (if time termination is being used). This feature eliminates the need for periodic charge cycle initiations and ensures that the battery is always fully charged. Automatic recharge is disabled in user termination mode.

Thermal Regulation

An internal thermal feedback loop reduces the programmed charge current if the die temperature attempts to rise above a preset value of approximately 105°C. This feature protects the LTC4061 from excessive temperature and allows the user to push the limits of the power handling capability of a given circuit board without risk of damaging the LTC4061. The charge current can be set according to typical (not worst-case) ambient temperatures with the assurance that the charger will automatically reduce the current in worst-case conditions.

OPERATION

Undervoltage Lockout (UVLO)

An internal undervoltage lockout circuit monitors the input voltage and keeps the charger in shutdown mode until V_{CC} rises above the undervoltage lockout threshold (3.8V). The UVLO circuit has a built-in hysteresis of 200mV. Furthermore, to protect against reverse current in the power MOSFET, the UVLO circuit keeps the charger in shutdown mode if V_{CC} falls to less than 45mV above the battery voltage. Hysteresis of 145mV prevents the charger from cycling in and out of shutdown.

Manual Shutdown

At any point in the charge cycle, the charger can be put into shutdown mode by pulling the $\overline{EN}$ pin high. This reduces the supply current to less than 50µA and the battery drain current of the charger to less than 2µA. A new charge cycle can be initiated by floating the $\overline{EN}$ pin or pulling it low.

If shutdown is not required, leaving the pin disconnected continuously enables the circuit.

Trickle-Charge and Defective Battery Detection

When the BAT pin voltage is below the 2.9V trickle charge threshold (V_{TRIKL}), the charger reduces the charge current to 10% of the programmed value. If the battery remains in trickle charge for more than 25% of the total programmed charge time, the charger stops charging and enters a FAULT state, indicating that the battery is defective[1]. The LTC4061 indicates the FAULT state by driving the $\overline{CHRG}$ open-drain output with a square wave. The duty cycle of this oscillation is 50% and the frequency is set by C_{TIMER}:

$$f_{\overline{CHRG}} = \frac{0.1\mu F}{C_{TIMER}} \bullet 6Hz$$

A LED driven by the $\overline{CHRG}$ output exhibits a pulsing pattern, indicating to the user that the battery needs replacing. To exit the FAULT state, the charger must be restarted either by toggling the $\overline{EN}$ input or removing and reapplying power to V_{CC}.

Charge Status Output ($\overline{CHRG}$)

The charge status indicator pin has three states: pull-down, pulse at 1.5Hz or 6Hz and high impedance. In the pull-down state, an NMOS transistor pulls down on the $\overline{CHRG}$ pin capable of sinking up to 10mA. A pull-down state indicates that the LTC4061 is charging a battery and the charge current is greater than I_{DETECT} (which is set by the external component R_{DET}). A high impedance state indicates that the charge current has dropped below I_{DETECT}. In the case where the I_{DET} pin is left unconnected ($R_{DET} = \infty$, $I_{DETECT} = 0$), a high impedance state on $\overline{CHRG}$ indicates that the LTC4061 is not charging.

Smart Pulsing Error Feature

LTC4061 has two different pulsing states at $\overline{CHRG}$ pull-down pin:

1. 6Hz (50% duty cycle) due to defective battery detection (see Trickle-Charge and Defective Battery Detection section);
2. 1.5Hz (25% duty cycle if in time termination, 50% duty cycle if in charge current or user termination) due to NTC out-of-temperature condition.

NTC Thermistor (NTC)

The temperature of the battery is measured by placing a negative temperature coefficient (NTC) thermistor close to the battery pack. The NTC circuitry is shown in Figure 1. To use this feature, connect the NTC thermistor, R_{NTC}, between the NTC pin and ground and a resistor, R_{NOM}, from the NTC pin to V_{CC}. R_{NOM} should be a 1% resistor with a value equal to the value of the chosen NTC thermistor at 25°C (this value is 100kΩ for a Vishay NTHS0603N01N1003J thermistor). The LTC4061 goes into hold mode when the resistance, R_{HOT}, of the NTC thermistor drops to 0.53 times the value of R_{NOM} or approximately 53kΩ, which corresponds to approximately 40°C. Hold mode freezes the timer and stops the charge cycle until the thermistor indicates a return to a valid temperature. As the temperature drops, the resistance of the NTC thermistor rises. The LTC4061 is designed to go into hold mode when the value of the NTC thermistor increases to 3.26 times the value of R_{NOM} This resistance is R_{COLD}. For a Vishay NTHS0603N01N1003J thermistor, this value is 326kΩ, which corresponds to approximately 0°C. The hot and cold comparators each have approximately 2°C of hysteresis to prevent oscillation about the trip point. Grounding the NTC pin disables the NTC function. For more details refer to the Application Information section.

[1] The Defective Battery Detection feature is only available when time termination is being used.

OPERATION

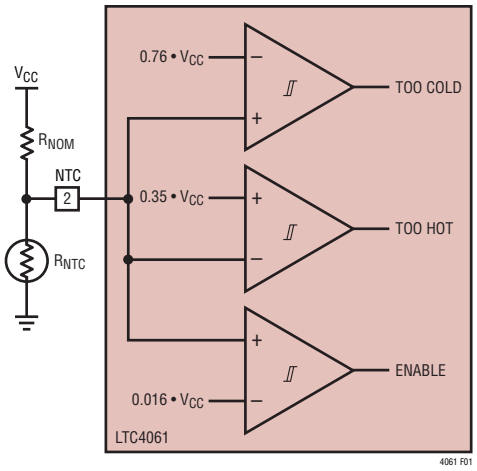

Figure 1. NTC Circuit Information

APPLICATIONS INFORMATION

Programming Charge Termination

The LTC4061 can terminate a charge cycle using one of several methods, allowing the designer considerable flexibility in choosing an ideal charge termination algorithm. Table 1 shows a brief description of the different termination methods and their behaviors.

Charge Time Termination

Connecting a capacitor (C_{TIMER}) to the TIMER pin enables the timer and selects charge time termination. The total charge time is set by:

$$\text{TIME (HOURS)} = \frac{C_{TIMER}}{0.1\mu F} \bullet 3 \text{ HOURS}$$

Table 1.

METHOD	TIMER	I_{DET}	CHARGER DESCRIPTION	$\overline{CHRG}$ OUTPUT DESCRIPTION
Charge Time Termination Mode	0.1µF to GND	R_{DET} to GND	Charges for 3 Hours. After 3 Hours, the Charger Stops Charging and Enters Standby Mode. Recharge Cycles Last for 1.5 Hours.	Pull-Down State While $I_{BAT} > I_{DET}$. High Impedance State While $I_{BAT} < I_{DETECT}$ or When Charging Is Stopped. Pulsing State Available When NTC Is Used and Is Still Charging.
	0.1µF to GND	NC	Charges for 3 Hours. After 3 Hours, the Charger Stops Charging and Enters Standby Mode. Recharge Cycles Last for 1.5 Hours.	Pull-Down State When Charging. High Impedance State When Charging Is Stopped. Pulsing State Available When NTC Is Used and Is Still Charging.
Charge Current Termination	GND	R_{DET} to GND	Charges Until Charge Current Drops Below I_{DET}, Then Enters Standby Mode.	Pull-Down State When Charging. High Impedance State When Charging Is Stopped. Pulsing State Available When NTC Is Used and Is Still Charging.
	GND	NC	Charges Indefinitely.	Pull-Down State When Charging. High Impedance State When Charging Is Stopped. Pulsing State Available When NTC Is Used and Is Still Charging.
User Selectable Charge Termination	V_{CC}	R_{DET} to GND	Charges Indefinitely. SmartStart Is Disabled.	Pull-Down State While $I_{BAT} > I_{DETECT}$. High Impedance State While $I_{BAT} < I_{DETECT}$ or When Charging Is Stopped. Pulsing State Available When NTC Is Used and Is Still Charging.
	V_{CC}	NC	Charges Indefinitely. SmartStart Is Disabled.	Pull-Down State When Charging. High Impedance State When Charging Is Stopped. Pulsing State Available When NTC Is Used and Is Still Charging.

APPLICATIONS INFORMATION

When the programmed time has elapsed, the charge cycle terminates and the charger enters standby mode. Subsequent recharge cycles terminate when 50% of the programmed time has elapsed. The I_{DET} pin determines the behavior of the $\overline{CHRG}$ output. Connecting a resistor (R_{DET}) from the I_{DET} pin to ground sets the charge current detection threshold, I_{DETECT}:

$$I_{DETECT} = \frac{R_{PROG}}{10R_{DET}} \bullet I_{CHG} = \frac{100V}{R_{DET}} \text{ or}$$

$$R_{DET} = \frac{100V}{I_{DETECT}}$$

When the charge current (I_{BAT}) is greater than I_{DETECT}, the $\overline{CHRG}$ output is in its pull-down state. When the charger enters constant voltage mode operation and the charge current falls below I_{DETECT}, the $\overline{CHRG}$ output becomes high impedance, indicating that the battery is almost fully charged. The $\overline{CHRG}$ output will also become high impedance once the charge time elapses. If the I_{DET} pin is not connected, the $\overline{CHRG}$ output remains in its pull-down state until the charge time elapses and terminates the charge cycle.

Figure 2 shows a charger circuit using charge time termination that is programmed to charge at 500mA. Once the charge current drops below 100mA in constant voltage mode (as set by R_{DET}), the $\overline{CHRG}$ output turns off the LED. This indicates to the user that the battery is almost fully charged and ready to use. The LTC4061 continues to charge the battery until the internal timer reaches 3 hours (as set by C_{TIMER}). During recharge cycles, the LTC4061 charges the battery until the internal timer reaches

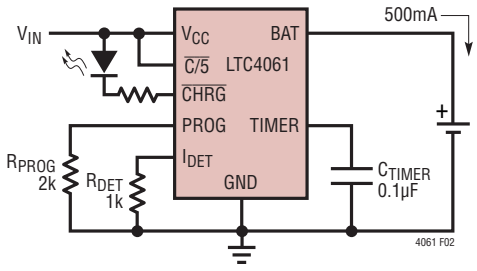

Figure 2. Time Termination Mode. The Charge Cycle Ends After 3 Hours.

1.5 hours. Figure 3 describes the operation of the LTC4061 charger when charge time termination is used.

Charge Current Termination

Connecting the TIMER pin to ground selects charge current termination. With this method, the timer is disabled and a resistor (R_{DET}) must be connected from the I_{DET} pin to ground. I_{DETECT} is programmed using the same equation stated in the previous section. The charge cycle terminates when the charge current falls below I_{DETECT}. This condition is detected using an internal filtered comparator to monitor the I_{DET} pin. When the I_{DET} pin falls below 100mV for longer than t_{TERM} (typically 1ms), charging is terminated.

When charging, transient loads on the BAT pin can cause the I_{DET} pin to fall below 100mV for short periods of time before the DC current has dropped below the I_{DETECT} threshold. The 1.5ms filter time (t_{TERM}) on the internal comparator ensures that transient loads of this nature do not result in premature charge cycle termination. Once the *average* charge current drops below I_{DETECT}, the charger terminates the charge cycle.

The $\overline{CHRG}$ output is in a pull-down state while charging and in a high impedance state once charging has stopped. Figure 4 describes the operation of the LTC4061 charger when charge current termination is used.

User-Selectable Charge Termination

Connecting the TIMER pin to V_{CC} selects user-selectable charge termination, in which all of the internal termination features are disabled. The charge cycle continues indefinitely until the charger is shut down through the $\overline{EN}$ pin. The I_{DET} pin programs the behavior of the $\overline{CHRG}$ output in the same manner as when using charge time termination. If the I_{DET} pin is not connected, the $\overline{CHRG}$ output remains in its pull-down state until the charger is shut down.

With user-selectable charge termination, the SmartStart feature is disabled; when the charger is powered on or enabled, the LTC4061 automatically begins charging, regardless of the battery voltage. Figure 5 describes charger operation when user-selectable charge termination is used.

APPLICATIONS INFORMATION

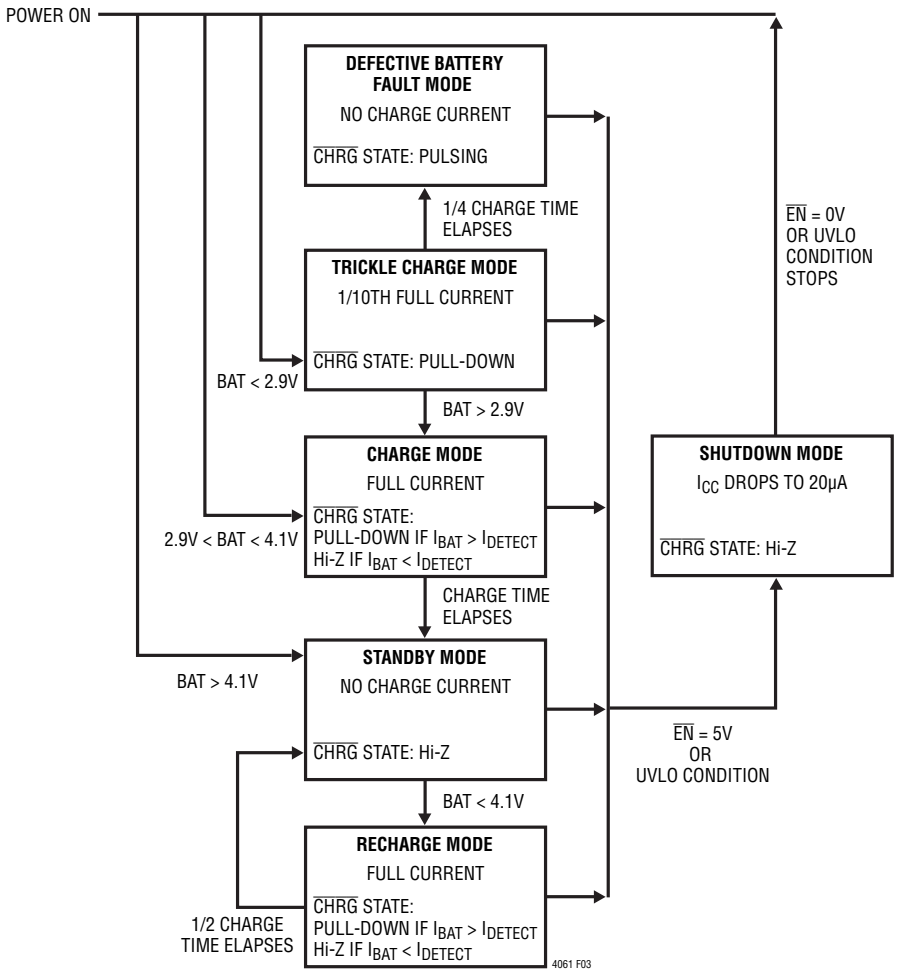

Figure 3. State Diagram of a Charge Cycle Using Charge Time Termination

APPLICATIONS INFORMATION

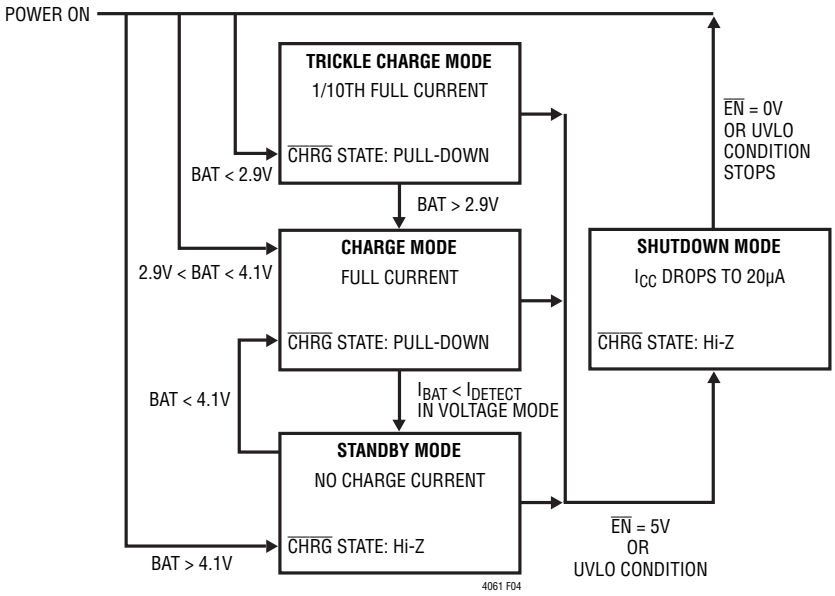

Figure 4. State Diagram of a Charge Cycle Using Charge Current Termination

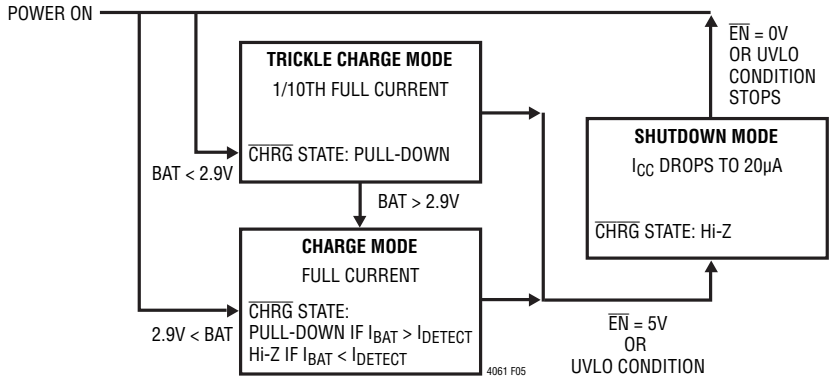

Figure 5. State Diagram of a Charge Cycle Using User-Selectable Termination

APPLICATIONS INFORMATION

Programming C/10 Current Detection/Termination

In most cases, an external resistor, R_{DET}, is needed to set the charge current detection threshold, I_{DETECT}. However, when setting I_{DETECT} to be 1/10th of I_{CHG}, the I_{DET} pin can be connected directly to the PROG pin. This reduces the component count, as shown in Figure 6.

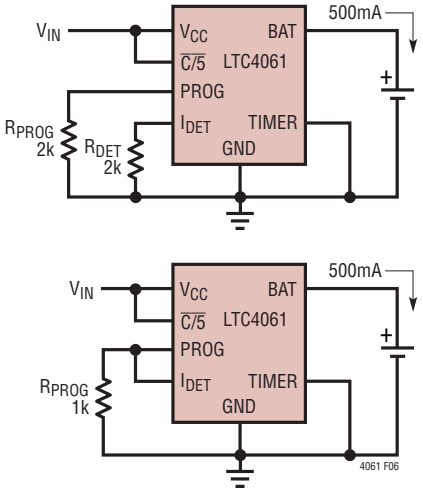

Figure 6. Two Circuits That Charge at 500mA Full-Scale Current and Terminate at 50mA

When PROG and I_{DET} are connected in this way, the full-scale charge current, I_{CHG}, is programmed with a different equation:

$$R_{PROG} = \frac{500V}{I_{CHG}}, I_{CHG} = \frac{500V}{R_{PROG}}$$

Stability Considerations

The battery charger constant voltage mode feedback loop is stable without any compensation provided a battery is connected. However, a 1µF capacitor with a 1Ω series resistor to GND is recommended at the BAT pin to reduce noise when no battery is present.

When the charger is in constant current mode, the PROG pin is in the feedback loop, not the battery. The constant current stability is affected by the impedance at the PROG pin. With no additional capacitance on the PROG pin, the charger is stable with program resistor values as high as 10kΩ; however, additional capacitance on this node reduces the maximum allowed program resistor value.

Power Dissipation

When designing the battery charger circuit, it is not necessary to design for worst-case power dissipation scenarios because the LTC4061 automatically reduces the charge current during high power conditions. The conditions that cause the LTC4061 to reduce charge current through thermal feedback can be approximated by considering the power dissipated in the IC. Most of the power dissipation is generated from the internal charger MOSFET. Thus, the power dissipation is calculated to be approximately:

$$P_D = (V_{CC} – V_{BAT}) • I_{BAT}$$

P_D is the power dissipated, V_{CC} is the input supply voltage, V_{BAT} is the battery voltage and I_{BAT} is the charge current. The approximate ambient temperature at which the thermal feedback begins to protect the IC is:

$$T_A = 105°C – P_D • \theta_{JA}$$

$$T_A = 105°C – (V_{CC} – V_{BAT}) • I_{BAT} • \theta_{JA}$$

Example: An LTC4061 operating from a 5V wall adapter is programmed to supply 800mA full-scale current to a discharged Li-Ion battery with a voltage of 3.3V. Assuming θ_{JA} is 40°C/W (see Thermal Considerations), the ambient temperature at which the LTC4061 will begin to reduce the charge current is approximately:

$$T_A = 105°C – (5V – 3.3V) • (800mA) • 40°C/W$$

$$T_A = 105°C – 1.36W • 40°C/W = 105°C – 54.4°C$$

$$T_A = 50.6°C$$

The LTC4061 can be used above 50.6°C ambient, but the charge current will be reduced from 800mA. The approximate current at a given ambient temperature can be approximated by:

$$I_{BAT} = \frac{105°C – T_A}{(V_{CC} – V_{BAT}) • \theta_{JA}}$$

Using the previous example with an ambient temperature of 60°C, the charge current will be reduced to approximately:

$$I_{BAT} = \frac{105°C – 60°C}{(5V – 3.3V) • 40°C/W} = \frac{45°C}{68°C/A}$$

$$I_{BAT} = 662mA$$

APPLICATIONS INFORMATION

It is important to remember that LTC4061 applications do not need to be designed for worst-case thermal conditions, since the IC will automatically reduce power dissipation if the junction temperature reaches approximately 105°C.

Thermistors

The LTC4061 NTC comparator trip points were designed to work with thermistors whose resistance-temperature characteristics follow Vishay Dale's "R-T Curve 1." The Vishay NTHS0603N01N1003J is an example of such a thermistor. However, Vishay Dale has many thermistor products that follow the "R-T Curve 1" characteristic in a variety of sizes. Furthermore, any thermistor whose ratio of R_{COLD} to R_{HOT} is about 6 also works (Vishay Dale R-T Curve 1 shows a ratio of R_{COLD} to R_{HOT} of 3.266/0.5325 = 6.13).

Power conscious designers may want to use thermistors whose room temperature value is greater than 10kΩ. Vishay Dale has a number of values of thermistor from 10kΩ to 100kΩ that follow the "R-T Curve 1." Using different R-T curves, such as Vishay Dale "R-T Curve 2," is also possible. This curve, combined with LTC4061 internal thresholds, gives temperature trip points of approximately 0°C (falling) and 40°C (rising), a delta of 40°C. This delta in temperature can be moved in either direction by changing the value of R_{NOM} with respect to R_{NTC}. Increasing R_{NOM} moves both trip points to lower temperatures. Likewise a decrease in R_{NOM} with respect to R_{NTC} moves the trip points to higher temperatures. To calculate R_{NOM} for a shift to lower temperatures, use the following equation:

$$R_{NOM} = \frac{R_{COLD}}{3.266} \bullet R_{NTC} \text{ at } 25°C$$

where R_{COLD} is the resistance ratio of R_{NTC} at the desired cold temperature trip point. If you want to shift the trip points to higher temperatures, use the following equations:

$$R_{NOM} = \frac{R_{HOT}}{0.5325} \bullet R_{NTC} \text{ at } 25°C$$

where R_{HOT} is the resistance ratio of R_{NTC} at the desired hot temperature trip point.

Here is an example using 10kΩ R-T Curve 2 thermistor from Vishay Dale. The difference between the trip points is 40°C, from before, and we want the cold trip point to be 0°C, which would put the hot trip point at 40°C. The R_{NOM} needed is calculated as follows:

$$R_{NOM} = \frac{R_{COLD}}{3.266} \bullet R_{NTC} \text{ at } 25°C$$
$$= \frac{2.816}{3.266} \bullet 10k\Omega = 8.62k\Omega$$

The nearest 1% value for R_{NOM} is 8.66kΩ. This is the value used to bias the NTC thermistor to get cold and hot trip points of approximately 0°C and 40°C respectively. To extend the delta between the cold and hot trip points, a resistor, R1, can be added in series with R_{NTC}. The values of the resistors are calculated as follows:

$$R_{NOM} = \frac{R_{COLD} - R_{HOT}}{3.266 - 0.5325}$$
$$R_1 = \left(\frac{0.5325}{3.266 - 0.5325} \right) \bullet (R_{COLD} - R_{HOT}) - R_{HOT}$$

where R_{NOM} is the value of the bias resistor, R_{HOT} and R_{COLD} are the values of R_{NTC} at the desired temperature trip points. Continuing the example from before with a desired hot trip point of 50°C:

$$R_{NOM} = \frac{R_{COLD} - R_{HOT}}{3.266 - 0.5325} = \frac{10k \bullet (2.816 - 0.4086)}{3.266 - 0.5325}$$
$$= 8.8k\Omega, \text{ 8.87k is the nearest 1\% value.}$$

$$R_1 = 10k \bullet \left(\frac{0.5325}{3.266 - 0.5325} \right)$$
$$\bullet (2.816 - 0.4086) - 0.4086$$
$$= 604\Omega, \text{ 604 is the nearest 1\% value.}$$

The final solution is R_{NOM} = 8.87kΩ, R1 = 604Ω and R_{NTC} = 10kΩ at 25°C.

NTC Trip Point Error

When a 1% resistor is used for R_{HOT}, the major error in the 40°C trip point is determined by the tolerance of the NTC thermistor. A typical 100kΩ NTC thermistor has ±10% tolerance. By looking up the temperature coefficient of the thermistor at 40°C, the tolerance error can

APPLICATIONS INFORMATION

be calculated in degrees centigrade. Consider the Vishay NTHS0603N01N1003J thermistor, which has a temperature coefficient of –4%/°C at 40°C. Dividing the tolerance by the temperature coefficient, ±5%/(4%/°C) = ±1.25°C, gives the temperature error of the hot trip point.

The cold trip point error depends on the tolerance of the NTC thermistor and the degree to which the ratio of its value at 0°C and its value at 40°C varies from 6.14 to 1. Therefore, the cold trip point error can be calculated using the tolerance, TOL, the temperature coefficient of the thermistor at 0°C, TC (in %/°C), the value of the thermistor at 0°C, R_{COLD}, and the value of the thermistor at 40°C, R_{HOT}. The formula is:

$$\text{Temperature Error (°C)} = \frac{\left(\frac{1+TOL}{6.14} \bullet \frac{R_{COLD}}{R_{HOT}} - 1\right) \bullet 100}{TC}$$

For example, the Vishay NTHS0603N01N1003J thermistor with a tolerance of ±5%, TC of -5%/°C and R_{COLD}/R_{HOT} of 6.13, has a cold trip point error of:

$$\text{Temperature Error (°C)} = \frac{\left(\frac{1+0.05}{6.14} \bullet 6.13 - 1\right) \bullet 100}{-5}$$

$$= -0.95°C, 1.05°C$$

Thermal Considerations

In order to deliver maximum charge current under all conditions, it is critical that the exposed metal pad on the backside of the LTC4061 package is properly soldered to the PC board ground. Correctly soldered to a 2500mm^2 double sided 1oz copper board, the LTC4061 has a thermal resistance of approximately 40°C/W. Failure to make thermal contact between the exposed pad on the backside of the package and the copper board will result in thermal resistances far greater than 40°C/W. As an example, a correctly soldered LTC4061 can deliver over 800mA to a battery from a 5V supply at room temperature. Without a good backside thermal connection, this number could drop to less than 500mA.

V_{CC} Bypass Capacitor

Many types of capacitors can be used for input bypassing; however, caution must be exercised when using multilayer ceramic capacitors. Because of the self-resonant and high Q characteristics of some types of ceramic capacitors, high voltage transients can be generated under some start-up conditions such as connecting the charger input to a live power source. Adding a 1.5Ω resistor in series with an X5R ceramic capacitor will minimize start-up voltage transients. For more information, see Application Note 88.

Charge Current Soft-Start and Soft-Stop

The LTC4061 includes a soft-start circuit to minimize the inrush current at the start of a charge cycle. When a charge cycle is initiated, the charge current ramps from zero to the full-scale current over a period of approximately 100µs. Likewise, internal circuitry slowly ramps the charge current from full-scale to zero when the charger is shut off or self terminates. This has the effect of minimizing the transient current load on the power supply during start-up and charge termination.

Reverse Polarity Input Voltage Protection

In some applications, protection from reverse polarity voltage on V_{CC} is desired. If the supply voltage is high enough, a series blocking diode can be used. In other cases, where the diode voltage drop must be kept low, a P-channel MOSFET can be used (as shown in Figure 7).

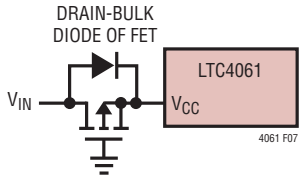

Figure 7. Low Loss Input Reverse Polarity Protection

USB and Wall Adapter Power

The LTC4061 allows charging from both a wall adapter and a USB port. Figure 8 shows an example of how to combine wall adapter and USB power inputs. A P-channel

MOSFET, MP1, is used to prevent back conducting into the USB port when a wall adapter is present and a Schottky diode, D1, is used to prevent USB power loss through the 1kΩ pull-down resistor.

Typically a wall adapter can supply more current than the 500mA limited USB port. Therefore, an N-channel MOSFET, MN1, and an extra 3.3kΩ program resistor are used to increase the charge current to 800mA when the wall adapter is present.

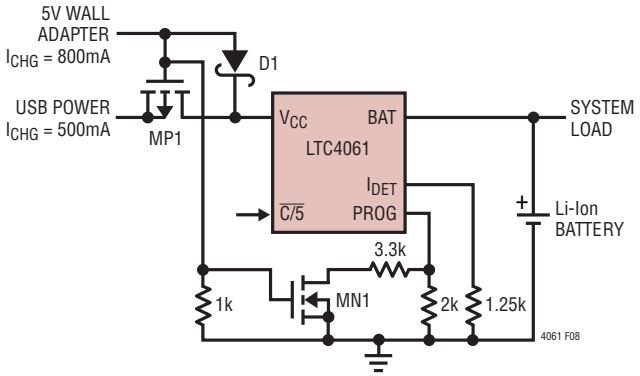

Figure 8. Combining Wall Adapter and USB Power

PACKAGE DESCRIPTION

DD Package
10-Lead Plastic DFN (3mm × 3mm)
(Reference LTC DWG # 05-08-1699 Rev C)

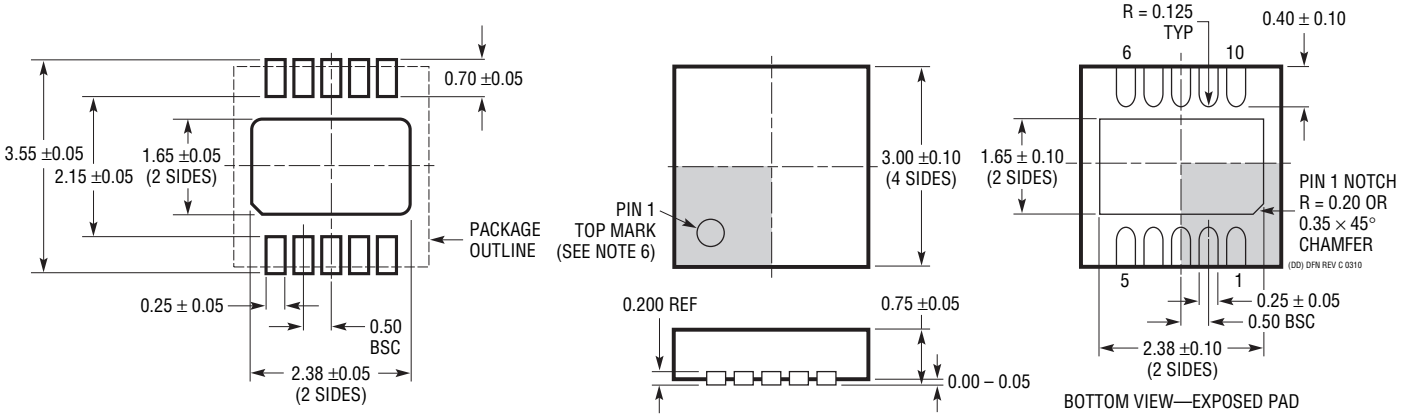

RECOMMENDED SOLDER PAD PITCH AND DIMENSIONS

NOTE:
1. DRAWING TO BE MADE A JEDEC PACKAGE OUTLINE M0-229 VARIATION OF (WEED-2).
   CHECK THE LTC WEBSITE DATA SHEET FOR CURRENT STATUS OF VARIATION ASSIGNMENT
2. DRAWING NOT TO SCALE
3. ALL DIMENSIONS ARE IN MILLIMETERS
4. DIMENSIONS OF EXPOSED PAD ON BOTTOM OF PACKAGE DO NOT INCLUDE
   MOLD FLASH. MOLD FLASH, IF PRESENT, SHALL NOT EXCEED 0.15mm ON ANY SIDE
5. EXPOSED PAD SHALL BE SOLDER PLATED
6. SHADED AREA IS ONLY A REFERENCE FOR PIN 1 LOCATION ON THE
   TOP AND BOTTOM OF PACKAGE

REVISION HISTORY (Revision history begins at Rev D)

REV	DATE	DESCRIPTION	PAGE NUMBER
D	7/10	Updated Charge Time Termination equation	11

Information furnished by Linear Technology Corporation is believed to be accurate and reliable. However, no responsibility is assumed for its use. Linear Technology Corporation makes no representation that the interconnection of its circuits as described herein will not infringe on existing patent rights.

TYPICAL APPLICATION

Full-Featured Li-Ion Charger (Using Time Termination)

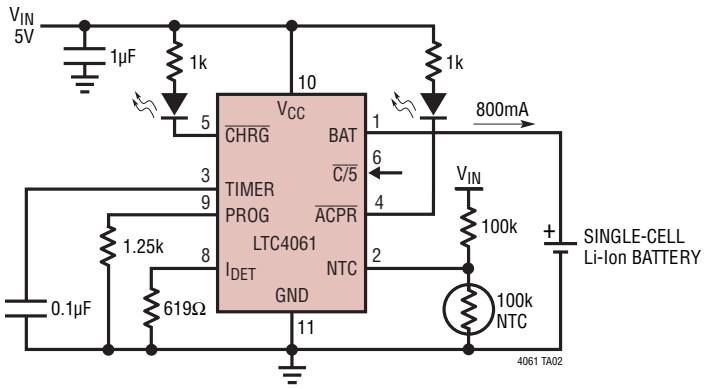

USB/Wall Adapter Power Li-Ion Charger (Using Charge Current Termination)

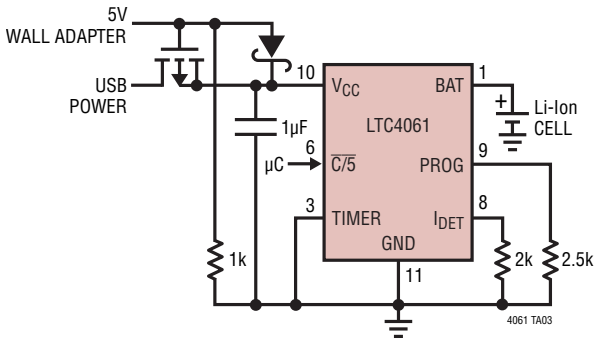

RELATED PARTS

PART NUMBER	DESCRIPTION	COMMENTS
Battery Chargers		
LTC1734	Lithium-Ion Linear Battery Charger in ThinSOT™	Simple ThinSOT Charger, No Blocking Diode, No Sense Resistor Needed
LTC1734L	Lithium-Ion Linear Battery Charger in ThinSOT	Low Current Version of LTC1734, 50mA ≤ I_{CHRG} ≤ 0mA
LTC4002	Switch Mode Lithium-Ion Battery Charger	Standalone, 4.7V ≤ V_{IN} ≤ 24V, 500kHz Frequency, 3 Hour Charge Termination
LTC4052	Monolithic Lithium-Ion Battery Pulse Charger	No Blocking Diode or External Power FET Required, ≤1.5A Charge Current
LTC4053	USB Compatible Monolithic Li-Ion Battery Charger	Standalone Charger with Programmable Timer, Up to 1.25A Charge Current
LTC4054	Standalone Linear Li-Ion Battery Charger with Integrated Pass Transistor in ThinSOT	Thermal Regulation Prevents Overheating, C/10 Termination, C/10 Indicator, Up to 800mA Charge Current
LTC4057	Lithium-Ion Linear Battery Charger	Up to 800mA Charge Current, Thermal Regulation, ThinSOT Package
LTC4058	Standalone 950mA Lithium-Ion Charger in DFN	C/10 Charge Termination, Battery Kelvin Sensing, ±7% Charge Accuracy
LTC4059	900mA Linear Lithium-Ion Battery Charger	2mm × 2mm DFN Package, Thermal Regulation, Charge Current Monitor Output
LTC4062	Standalone Linear Li-Ion Battery Charger with Micropower Comparator	4.2V, ±0.35% Float Voltage, Up to 1A Charge Current, 3mm × 3mm DFN Package
LTC4063	Li-Ion Charger with Linear Regulator	Up to 1A Charge Current, 100mA, 125mV LDO, 3mm × 3mm DFN Package
LTC4411/LTC4412	Low Loss PowerPath™ Controller in ThinSOT	Automatic Switching Between DC Sources, Load Sharing, Replaces ORing Diodes
Power Management		
LTC3405/LTC3405A	300mA (I_{OUT}), 1.5MHz, Synchronous Step-Down DC/DC Converter	95% Efficiency, V_{IN}: 2.7V to 6V, V_{OUT} = 0.8V, I_Q = 20µA, I_{SD} < 1µA, ThinSOT Package
LTC3406/LTC3406A	600mA (I_{OUT}), 1.5MHz, Synchronous Step-Down DC/DC Converter	95% Efficiency, V_{IN}: 2.5V to 5.5V, V_{OUT} = 0.6V, I_Q = 20µA, I_{SD} < 1µA, ThinSOT Package
LTC3411	1.25A (I_{OUT}), 4MHz, Synchronous Step-Down DC/DC Converter	95% Efficiency, V_{IN}: 2.5V to 5.5V, V_{OUT} = 0.8V, I_Q = 60µA, I_{SD} < 1µA, MS Package
LTC3440	600mA (I_{OUT}), 2MHz, Synchronous Buck-Boost DC/DC Converter	95% Efficiency, V_{IN}: 2.5V to 5.5V, V_{OUT} = 2.5V, I_Q = 25µA, I_{SD} < 1µA, MS Package
LTC4413	Dual Ideal Diode in DFN	2-Channel Ideal Diode ORing, Low Forward On-Resistance, Low Regulated Forward Voltage, 2.5V ≤ V_{IN} ≤ 5.5V

Linear Technology Corporation
1630 McCarthy Blvd., Milpitas, CA 95035-7417
(408) 432-1900 • FAX: (408) 434-0507 • www.linear.com
LT 0710 REV D • PRINTED IN USA
© LINEAR TECHNOLOGY CORPORATION 2005