USB Compatible Lithium-Ion Battery Charger with Thermal Regulation

FEATURES

- **Charges Single-Cell Li-Ion Batteries Directly from USB Port**
- **Thermal Regulation Maximizes Charge Rate without Risk of Overheating***
- **Programmable Charge Current with ±7% Accuracy**
- **Low Dropout Operation**
- **No External MOSFET, Sense Resistor or Blocking Diode Required**
- Programmable Charge Termination Timer
- Preset Charge Voltage with ±1% Accuracy
- C/10 Charge Current Detection Output
- AC Present Logic Output
- 25µA Supply Current in Shutdown Mode
- Automatic Recharge
- Charge Current Monitor Useful for Gas Gauging
- Thermistor Input for Temperature Qualified Charging
- Available in 10-pin thermally enhanced MSOP and low profile (0.75mm) 3mm × 3mm DFN packages

APPLICATIONS

- Cellular Telephones
- Handheld Computers
- Charging Docks and Cradles
- MP3 Players
- Digital Cameras

DESCRIPTION

The LTC®4053 is a standalone linear charger for lithium-ion batteries that can be powered directly from a USB port. The IC contains an on-chip power MOSFET and eliminates the need for an external sense resistor and blocking diode. Thermal regulation automatically adjusts charge current to limit die temperature during high power or high ambient temperature conditions. This feature protects the end product and the LTC4053 from thermal stress while the IC charges the battery at maximum rate without interruption.

The charge current and charge time can be set externally with a single resistor and capacitor, respectively. When the input supply (wall adapter or USB supply) is removed, the LTC4053 automatically enters a low current sleep mode, dropping the battery drain current to less than 5µA.

The LTC4053 also includes NTC temperature sensing, C/10 detection circuitry, AC present logic, low battery charge conditioning (trickle charging) and shutdown (25µA supply current).

The LTC4053 is available in 10-pin thermally enhanced MSOP and low profile (0.75mm) DFN packages.

LT, LTC and LT are registered trademarks of Linear Technology Corporation.
Protected by U.S. Patents including 6522118, 6700364.

TYPICAL APPLICATION

USB Powered Standalone Li-Ion Charger

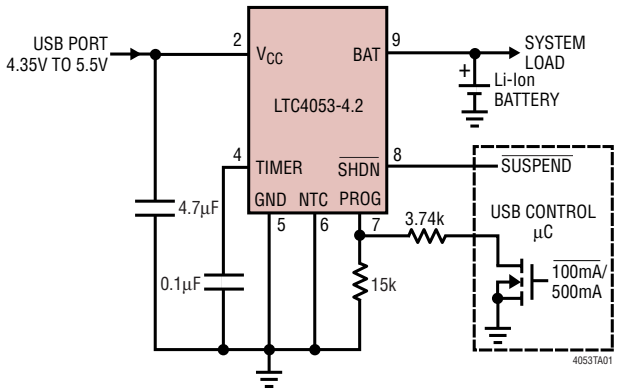

Charge Current vs Input Voltage

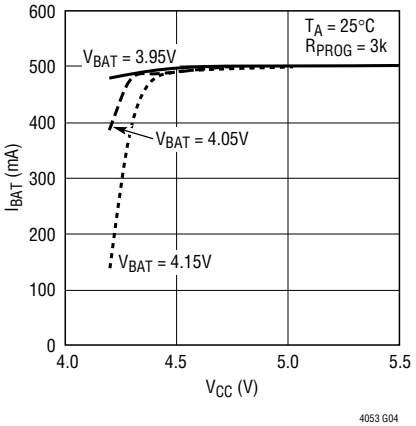

ABSOLUTE MAXIMUM RATINGS (Note 1)

Input Supply Voltage (V_{CC}) 7V
BAT 7V
NTC, SHDN, TIMER, PROG ..... –0.3V to V_{CC} + 0.3V
CHRG, FAULT, ACPR ..... –0.3V to 7V
BAT Short-Circuit Duration ..... Continuous
BAT Current (Note 2) 1.3A
PROG Current (Note 2) 1.3mA

Junction Temperature ..... 125°C
Operating Temperature Range (Note 3) ...–40°C to 85°C
Storage Temperature Range
MSE ..... –65°C to 150°C
DD ..... –65°C to 125°C
Lead Temperature (Soldering, 10 sec)
MSE ..... 300°C

PACKAGE/ORDER INFORMATION

TOP VIEW

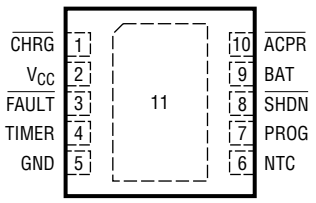

DD PACKAGE
10-LEAD (3mm × 3mm) PLASTIC DFN
T_{JMAX} = 125°C, θ_{JA} = 40°C/W (NOTE 4)
EXPOSED PAD (PIN 11) IS GND
(MUST BE SOLDERED TO PCB)

ORDER PART NUMBER
LTC4053EDD-4.2
DD PART MARKING
LBQC

TOP VIEW

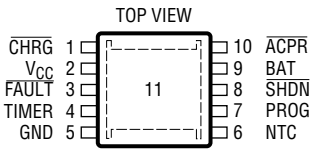

MSE EXPOSED PAD PACKAGE
10-LEAD PLASTIC MSOP
T_{JMAX} = 125°C, θ_{JA} = 40°C/W (NOTE 4)
EXPOSED PAD (PIN 11) IS GND
(MUST BE SOLDERED TO PCB)

ORDER PART NUMBER
LTC4053EMSE-4.2
MSE PART MARKING
LTZT

Order Options Tape and Reel: Add #TR
Lead Free: Add #PBF Lead Free Tape and Reel: Add #TRPBF
Lead Free Part Marking: http://www.linear.com/leadfree/

Consult LTC Marketing for parts specified with wider operating temperature ranges.

ELECTRICAL CHARACTERISTICS

The ● denotes the specifications which apply over the full operating temperature range, otherwise specifications are at T_A = 25°C. V_{CC} = 5V

SYMBOL	PARAMETER	CONDITIONS		MIN	TYP	MAX	UNITS
V_{CC}	V_{CC} Supply Voltage		●	4.25		6.5	V
I_{CC}	V_{CC} Supply Current	Charger On; Current Mode; R_{PROG} = 30k (Note 5)	●		1	2	mA
		Shutdown Mode; $V_{\overline{SHDN}}$ = 0V	●		25	50	µA
		Sleep Mode $V_{CC} < V_{BAT}$ or $V_{CC} \leq 4V$	●		25	50	µA
V_{BAT}	V_{BAT} Regulated Float Voltage		●	4.158	4.2	4.242	V
I_{BAT}	Battery Pin Current	R_{PROG} = 3k; Current Mode	●	465	500	535	mA
		R_{PROG} = 15k; Current Mode	●	93	100	107	mA
		Shutdown Mode; $V_{\overline{SHDN}}$ = 0V			±1	±3	µA
		Sleep Mode $V_{CC} < V_{BAT}$ or $V_{CC} < (V_{UV} - \Delta V_{UV})$			±1	±3	µA
I_{TRIKL}	Trickle Charge Current	V_{BAT} < 2V; R_{PROG} = 3k	●	35	50	65	mA
V_{TRIKL}	Trickle Charge Trip Threshold	V_{BAT} Rising			2.48		V
ΔV_{TRIKL}	Trickle Charge Trip Hysteresis				100		mV
V_{UV}	V_{CC} Undervoltage Lockout Voltage	V_{CC} Rising	●		4	4.25	V
ΔV_{UV}	V_{CC} Undervoltage Lockout Hysteresis				200		mV
V_{MSD}	Manual Shutdown Threshold Voltage	$\overline{SHDN}$ Pin Voltage		0.6		1.3	V
V_{ASD}	Automatic Shutdown Threshold Voltage	(V_{CC} - V_{BAT}) High to Low			35		mV
		(V_{CC} - V_{BAT}) Low to High			70		mV

ELECTRICAL CHARACTERISTICS

The ● denotes the specifications which apply over the full operating temperature range, otherwise specifications are at T_A = 25°C. V_{CC} = 5V

SYMBOL	PARAMETER	CONDITIONS		MIN	TYP	MAX	UNITS
V_{PROG}	PROG Pin Voltage	R_{PROG} = 3k, I_{PROG} = 500µA			1.5		V
$I_{\overline{CHRG}}$	$\overline{CHRG}$ Pin Weak Pulldown Current	$V_{\overline{CHRG}}$ = 1V		15	30	50	µA
$V_{\overline{CHRG}}$	$\overline{CHRG}$ Pin Output Low Voltage	$I_{\overline{CHRG}}$ = 5mA			0.35	0.6	V
$V_{\overline{ACPR}}$	$\overline{ACPR}$ Pin Output Low Voltage	$I_{\overline{ACPR}}$ = 5mA			0.35	0.6	V
$V_{\overline{FAULT}}$	$\overline{FAULT}$ Pin Output Low Voltage	$I_{\overline{FAULT}}$ = 5mA			0.35	0.6	V
$I_{C/10}$	End of Charge Indication Current Level	R_{PROG} = 3k		44	50	56	mA
t_{TIMER}	TIMER Accuracy	C_{TIMER} = 0.1µF			10		%
V_{RECHRG}	Recharge Battery Voltage Threshold	Battery Voltage Falling			4.035		V
$V_{NTC-HOT}$	NTC Pin Hot Threshold Voltage	V_{NTC} Falling			2.5		V
$V_{HOT-HYS}$	NTC Pin Hot Hysteresis Voltage				80		mV
$V_{NTC-COLD}$	NTC Pin Cold Threshold Voltage	V_{NTC} Rising			4.375		V
$V_{COLD-HYS}$	NTC Pin Cold Hystersis Voltage				80		mV
$V_{NTC-DIS}$	NTC Pin Disable Threshold Voltage	V_{NTC} Rising			100		mV
$V_{DIS-HYS}$	NTC Pin Disable Hystersis Voltage				10		mV
T_{LIM}	Junction Temperature in Constant-Temperature Mode				105		°C
R_{ON}	Power MOSFET “ON” Resistance				375		mΩ

Note 1: Absolute Maximum Ratings are those values beyond which the life of a device may be impaired.

Note 2: The Absolute Maximum BAT Current Rating of 1.3A is guaranteed by design and current density calculations. The Absolute Maximum PROG Current Rating is guaranteed to be 1/1000 of BAT current rating by design.

Note 3: The LTC4053E is guaranteed to meet performance specifications from 0°C to 70°C. Specifications over the –40°C to 85°C operating temperature range are assured by design, characterization and correlation with statistical process controls.

Note 4: Failure to solder the exposed backside of the package to the PC board will result in a thermal resistance much higher than 40°C/W.

Note 5: Supply current includes PROG pin current (approximately 50µA) but does not include any current delivered to the battery through the BAT pin (approximately 50mA).

TYPICAL PERFORMANCE CHARACTERISTICS

Battery Regulation Voltage vs Battery Charge Current

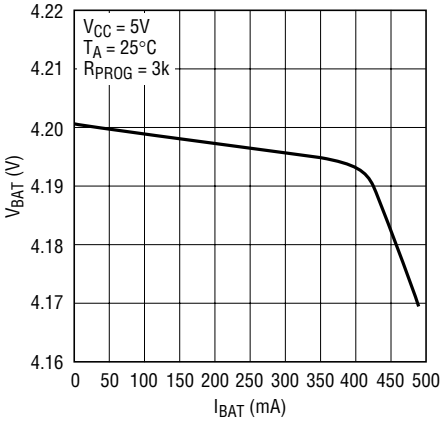

Battery Regulation Voltage vs Temperature

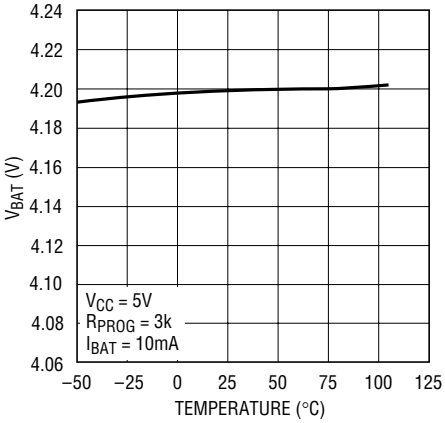

Battery Regulation Voltage vs V_{CC}

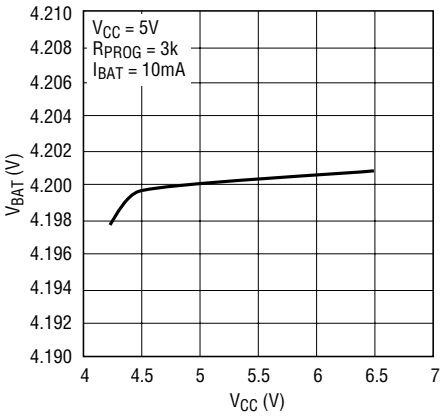

Charge Current vs Input Voltage

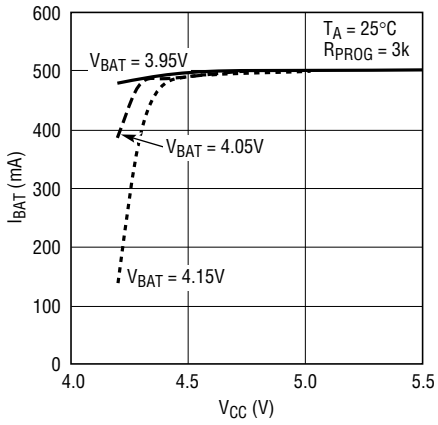

Charge Current vs Battery Voltage

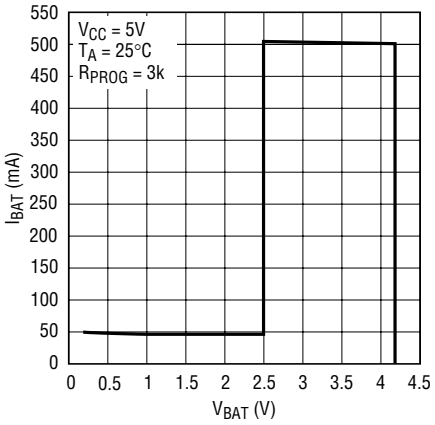

Charge Current vs Ambient Temperature with Thermal Regulation

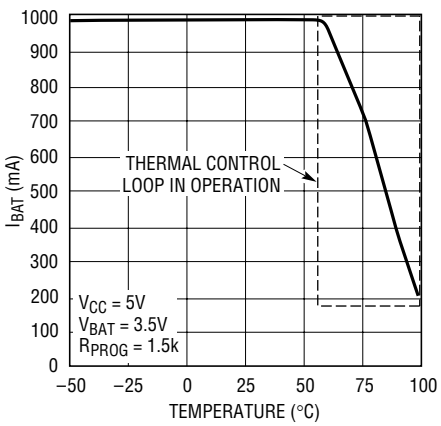

Undervoltage Lockout Voltage vs Temperature

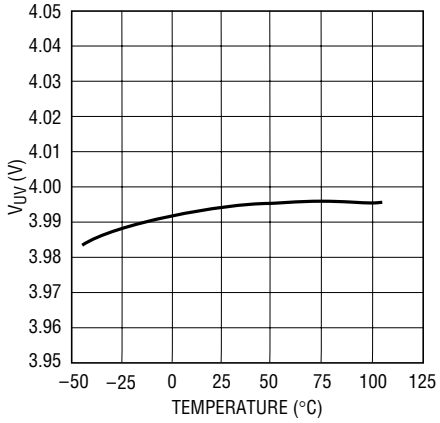

Shutdown Supply Current vs Temperature

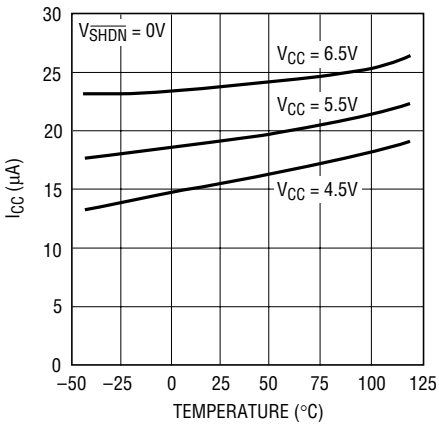

Manual Shutdown Threshold Voltage vs Temperature

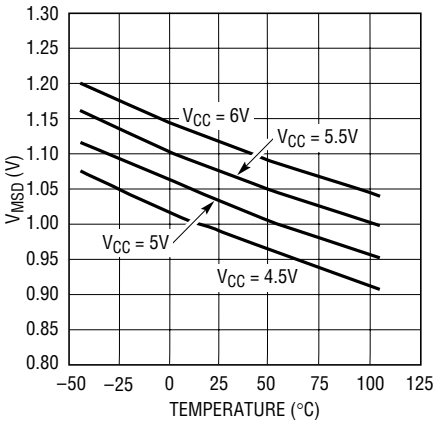

TYPICAL PERFORMANCE CHARACTERISTICS

PROG Pin Voltage vs Charge Current

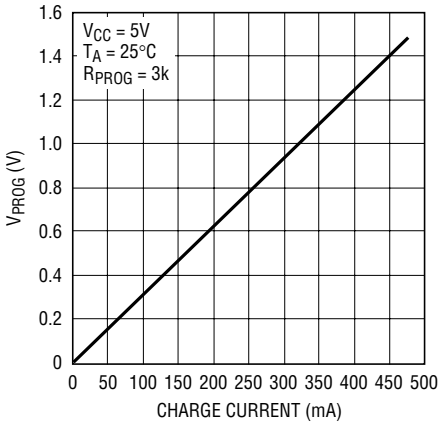

PROG Pin Voltage vs V_{CC} Constant Current Mode

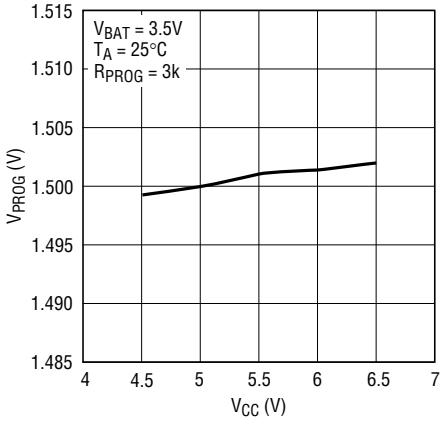

PROG Pin Voltage vs Temperature Constant Current Mode

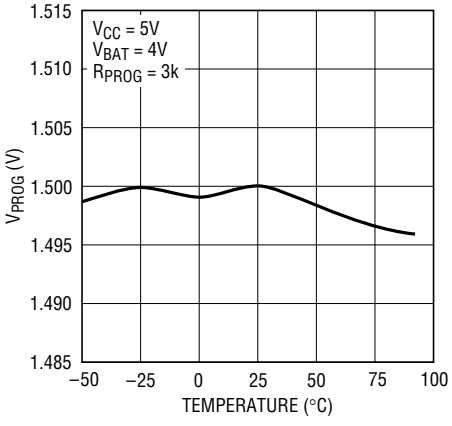

Trickle Charge Current vs Temperature

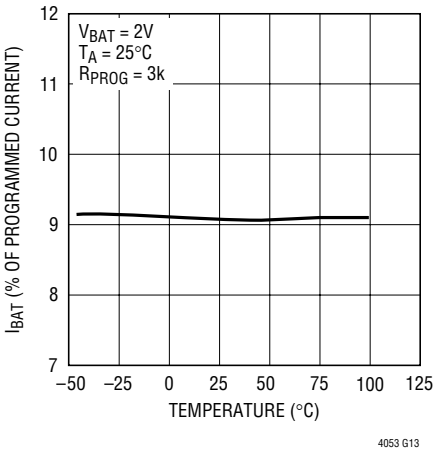

$\overline{CHRG}$ Pin Weak Pull-Down Current vs Temperature

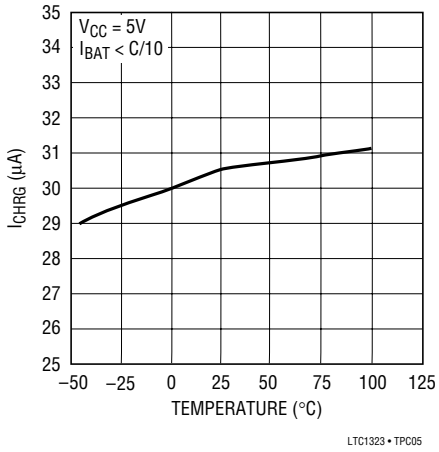

$\overline{CHRG}$ Pin Output Low Voltage vs Temperature

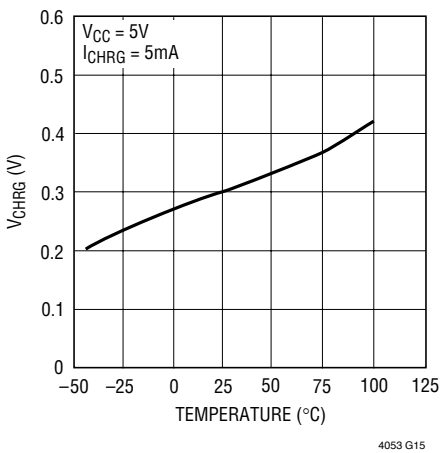

Timer Error vs Temperature

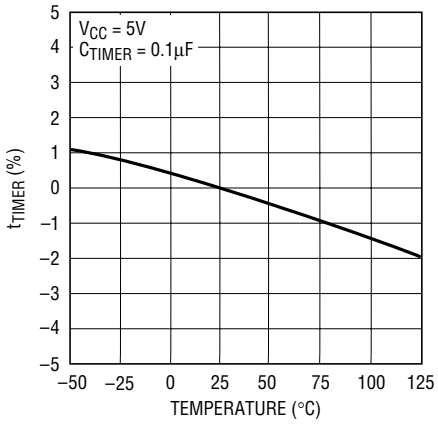

Timer Error vs V_{CC}

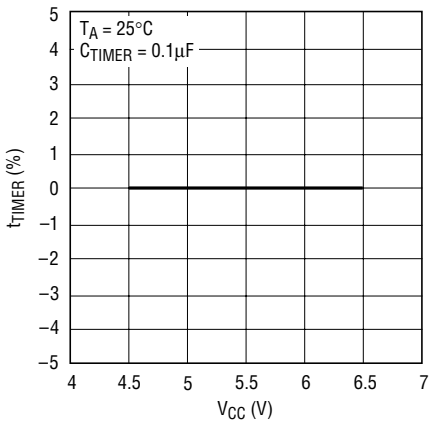

PIN FUNCTIONS

$\overline{CHRG}$: Open-Drain Charge Status Output. When the battery is being charged, the $\overline{CHRG}$ pin is pulled low by an internal N-channel MOSFET. When the charge current drops to 10% of the full-scale current, the N-channel MOSFET latches off and a 30µA current source is connected from the $\overline{CHRG}$ pin to ground. The C/10 latch can be cleared by grounding the $\overline{SHDN}$ pin, momentarily, or toggling V_{CC}. When the timer runs out or the input supply is removed, the current source is disconnected and the $\overline{CHRG}$ pin is forced high impedance.

V_{CC}: Positive Input Supply Voltage. When V_{CC} is within 35mV of V_{BAT} or less than the undervoltage lockout threshold, the LTC4053 enters sleep mode, dropping I_{BAT} to less than 3µA. V_{CC} can range from 4.25V to 6.5V. Bypass this pin with at least a 4.7µF ceramic capacitor to ground.

$\overline{FAULT}$: Open-Drain Fault Status Output. The $\overline{FAULT}$ open-drain logic signal indicates that the charger has timed out under trickle charge conditions or the NTC comparator is indicating an out-of-range battery temperature condition. If V_{BAT} is less that 2.48V, trickle charging begins whereby the charge current drops to one tenth of its programmed value and the timer period is reduced by a factor of four. When one fourth of the timing period has elapsed, if V_{BAT} is still less than 2.48V, trickle charging stops and the $\overline{FAULT}$ pin latches to ground. The fault can be cleared by toggling V_{CC}, momentarily grounding the $\overline{SHDN}$ pin or pulling the BAT pin above 2.48V. If the NTC comparator is indicating an out-of-range battery temperature condition, the $\overline{FAULT}$ pin will pull to ground until the temperature returns to the acceptable range.

TIMER: Timer Capacitor. The timer period is set by placing a capacitor, C_{TIMER}, to ground. The timer period is:

$$\text{Time (Hours)} = (C_{TIMER} \bullet 3\ \text{hr})/(0.1\mu F)$$

Short the TIMER pin to ground to disable the internal timer function.

GND: Ground. The exposed backside of the package is also ground and must be soldered to the PC board for maximum heat transfer.

NTC: Input to the NTC (Negative Temperature Coefficient) Thermistor Temperature Monitoring Circuit. With an external 10kΩ NTC thermistor to ground and a 1% resistor to V_{CC}, this pin can sense the temperature of the battery pack and stop charging when it is out of range. When the voltage at this pin drops below (0.5)•(V_{CC}) at hot temperatures or rises above (0.875)•(V_{CC}) at cold, charging is suspended and the internal timer is frozen. The $\overline{CHRG}$ pin output status is not affected in this hold state. The $\overline{FAULT}$ pin will be pulled to ground, but not latched. When the temperature returns to an acceptable range, charging will resume and the $\overline{FAULT}$ pin will be released. The NTC feature can be disabled by grounding the NTC pin.

PROG: Charge Current Program and Charge Current Monitor Pin. The charge current is programmed by connecting a resistor, R_{PROG} to ground. When in constant-current mode, the LTC4053 servos the PROG pin voltage to 1.5V. In all modes the voltage on the PROG pin can be used to measure the charge current as follows:

$$I_{BAT} = (V_{PROG}/R_{PROG}) \bullet 1000.$$

$\overline{SHDN}$: Shutdown Input Pin. Pulling the $\overline{SHDN}$ pin to ground will put the LTC4053 into standby mode where the BAT drain current is reduced to less than 3µA, and the supply current is reduced to less than 25µA. For normal operation, pull the $\overline{SHDN}$ pin up to V_{CC}.

BAT: Charge Current Output. A bypass capacitor of at least 1µF with a 1Ω series resistor is required to keep the loop stable when the battery is not present. A precision internal resistor divider sets the final float potential on this pin. The internal resistor divider is disconnected in sleep and shutdown mode.

$\overline{ACPR}$: Open-Drain Power Supply Status Output. When V_{CC} is greater than the undervoltage lockout threshold and at least 35mV above V_{BAT}, the $\overline{ACPR}$ pin will pull to ground. Otherwise, the pin is high impedance.

SIMPLIFIED BLOCK DIAGRAM

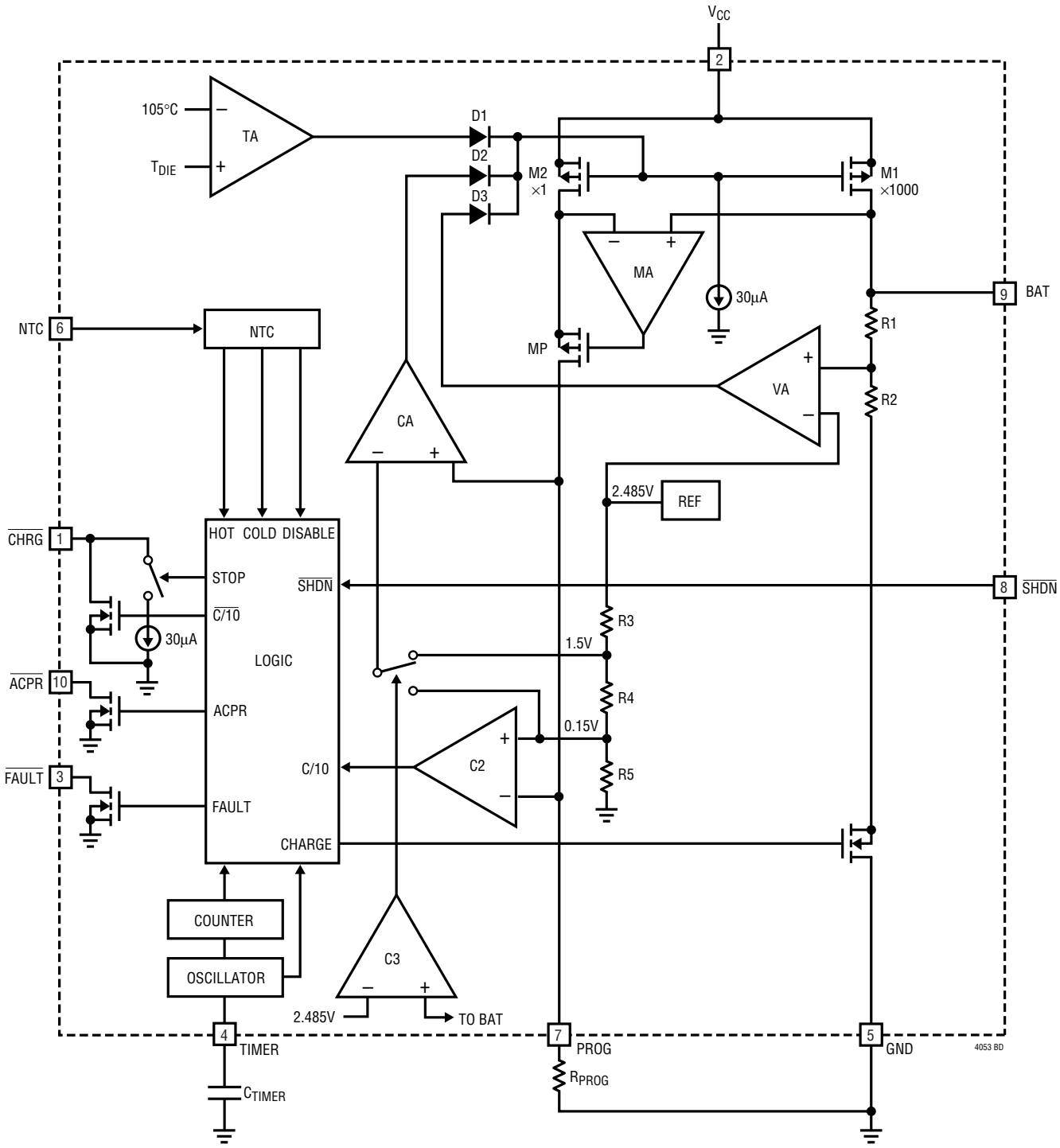

Figure 1

OPERATION

The LTC4053 is a linear battery charger designed primarily for charging single cell lithium-ion batteries. Featuring an internal P-channel power MOSFET, the charger uses a constant-current/constant-voltage charge algorithm with programmable current and a programmable timer for charge termination. Charge current can be programmed up to 1.25A with a final float voltage accuracy of ±1%. No blocking diode or sense resistor is required thus dropping the external component count to three for the basic charger circuit. The $\overline{\text{CHRG}}$, $\overline{\text{ACPR}}$, and $\overline{\text{FAULT}}$ open-drain status outputs provide information regarding the status of the LTC4053 at all times. An NTC thermistor input provides the option of charge qualification using battery temperature.

An internal thermal limit reduces the programmed charge current if the die temperature attempts to rise above a preset value of approximately 105°C. This feature protects the LTC4053 from excessive temperature, and allows the user to push the limits of the power handling capability of a given circuit board without risk of damaging the LTC4053 or the external components. Another benefit of the LTC4053 thermal limit is that charge current can be set according to typical, not worst-case, ambient temperatures for a given application with the assurance that the charger will automatically reduce the current in worst-case conditions.

The charge cycle begins when the voltage at the V_{CC} pin rises above the UVLO level, a program resistor is connected from the PROG pin to ground, and the $\overline{\text{SHDN}}$ pin is pulled above the shutdown threshold. At the beginning of the charge cycle, if the battery voltage is below 2.48V, the charger goes into trickle charge mode to bring the cell voltage up to a safe level for charging. The charger goes into the fast charge constant-current mode once the voltage on the BAT pin rises above 2.48V. In constant-current mode, the charge current is set by R_{PROG}.

When the battery approaches the final float voltage, the charge current begins to decrease as the LTC4053 enters the constant-voltage mode. When the current drops to 10% of the full-scale charge current, an internal comparator latches off the MOSFET on the $\overline{\text{CHRG}}$ pin and connects a weak current source to ground (30µA) to indicate a near end-of-charge (C/10) condition. The C/10 latch can be cleared by grounding the $\overline{\text{SHDN}}$ pin momentarily, or momentarily removing and reapplying V_{CC}.

An external capacitor on the TIMER pin sets the total charge time. When this time elapses, the charge cycle terminates and the $\overline{\text{CHRG}}$ pin assumes a high impedance state. To restart the charge cycle, remove the input voltage and reapply it, or momentarily force the $\overline{\text{SHDN}}$ pin to 0V. The charge cycle will also restart if the BAT pin voltage falls below the recharge threshold.

For lithium-ion and similar batteries that require an accurate final float voltage, the internal reference, voltage amplifier and the resistor divider provide regulation with ±1% (max) accuracy.

When the input voltage is not present, the charger goes into a sleep mode, dropping battery drain current, I_{BAT}, to less than 5µA. This greatly reduces the current drain on the battery and increases the standby time. The charger can be shut down (I_{CC} = 25µA) by forcing the $\overline{\text{SHDN}}$ pin to 0V.

APPLICATIONS INFORMATION

Undervoltage Lockout (UVLO)

An internal undervoltage lockout circuit monitors the input voltage and keeps the charger in shutdown mode until V_{CC} rises above the undervoltage lockout threshold. The UVLO circuit has a built-in hysteresis of 150mV. Furthermore, to protect against reverse current in the power MOSFET, the UVLO circuit keeps the charger in shutdown mode if V_{CC} falls to within 35mV of the battery voltage. If the UVLO comparator is tripped, the charger will not come out of shutdown until V_{CC} rises 70mV above the battery voltage.

Trickle Charge And Defective Battery Detection

At the beginning of a charge cycle, if the battery voltage is low (below 2.48V) the charger goes into trickle charge reducing the charge current to 10% of the full-scale current. If the low battery voltage persists for one quarter of the total charge time, the battery is assumed to be defective, the charge cycle is terminated, the $\overline{CHRG}$ pin output assumes a high impedance state, and the $\overline{FAULT}$ pin pulls low. The fault can be cleared by toggling V_{CC}, temporarily forcing the $\overline{SHDN}$ pin to 0V, or temporarily forcing the BAT pin voltage above 2.48V.

Shutdown

The LTC4053 can be shut down (I_{CC} = 25µA) by pulling the $\overline{SHDN}$ pin to 0V. For normal operation, pull the $\overline{SHDN}$ pin above the manual shutdown threshold voltage level. Do not leave this pin open. In shutdown the internal linear regulator is turned off, and the internal timer is reset.

Programming Charge Current

The formula for the battery charge current (see Figure 1) is:

$$I_{CHG} = (I_{PROG}) \bullet 1000$$

$$= (1.5V / R_{PROG}) \bullet 1000 \text{ or}$$

$$R_{PROG} = 1500V/I_{CHG}$$

where R_{PROG} is the total resistance from the PROG pin to ground. Under trickle charge conditions, this current is reduced to 10% of the full-scale value.

For example, if 500mA charge current is required, calculate:

$$R_{PROG} = 1500V/0.5A = 3k\Omega$$

For best stability over temperature and time, 1% metal-film resistors are recommended.

If the charger is in constant-temperature or constant-voltage mode, the battery current can be monitored by measuring the PROG pin voltage as follows:

$$I_{CHG} = (V_{PROG} / R_{PROG}) \bullet 1000$$

USB and Wall Adapter Power

Although the LTC4053 allows charging from a USB port, a wall adapter can also be used to charge Li-Ion batteries. Figure 2 shows an example of how to combine wall adapter and USB power inputs. A P-channel MOSFET, MP1, is used to prevent back conducting into the USB port when a wall adapter is present and Schottky diode, D1, is used to prevent USB power loss through the 1k pull-down resistor.

Typically a wall adapter can supply significantly more current than the 500mA-limited USB port. Therefore, an N-channel MOSFET, MN1 and an extra 3k program resistor can be used to increase the charge current to 1A when the wall adapter is present.

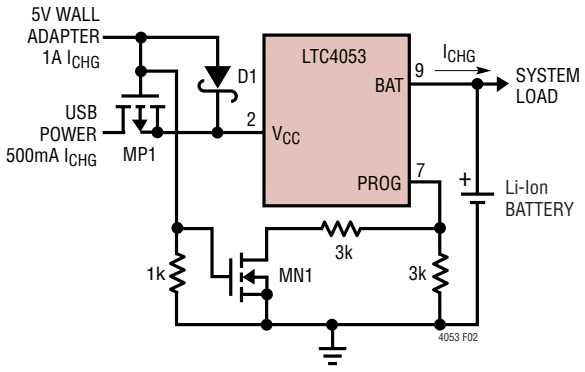

Figure 2. Combining Wall Adapter and USB Power

APPLICATIONS INFORMATION

Programming The Timer

The programmable timer is used to terminate the charge cycle. The timer duration is programmed by an external capacitor at the TIMER pin. The total charge time is:

Time (Hours) = (3 Hours) • (C_{TIMER}/0.1µF) or

C_{TIMER} = 0.1µF • Time (Hours)/3 (Hours)

The timer starts when an input voltage greater than the undervoltage lockout threshold level is applied and the SHDN pin is greater than the manual shutdown threshold voltage level. After a time-out occurs, the charge current stops, and the $\overline{CHRG}$ output assumes a high impedance state to indicate that the charging has stopped. Connecting the TIMER pin to ground disables the timer function.

Recharge

After a charge cycle has terminated, if the battery voltage drops below the recharge threshold of 4.05V a new charge cycle will begin. The recharge circuit integrates the BAT pin voltage for a few milliseconds to prevent a transient from restarting the charge cycle.

If the battery voltage remains below 2.48V during trickle charge for 1/4 of the programmed time, the battery may be defective and the charge cycle will end. In addition, the recharge comparator is disabled and a new charge cycle will not begin unless the input voltage is toggled off-then-on, the SHDN pin is momentarily pulled to ground, or the BAT pin is pulled above the 2.48V trickle charge threshold.

Open-Drain Status Outputs

The LTC4053 has three open-drain status outputs: $\overline{ACPR}$, $\overline{CHRG}$ and $\overline{FAULT}$. The $\overline{ACPR}$ pin pulls low when an input voltage greater than the undervoltage lockout threshold is applied and becomes high impedance when power (V_{IN} < V_{UV}) is removed. $\overline{CHRG}$ and $\overline{FAULT}$ work together to indicate the status of the charge cycle. Table 1 describes the status of the charge cycle based on the $\overline{CHRG}$ and $\overline{FAULT}$ outputs.

Table 1.

$\overline{FAULT}$	$\overline{CHRG}$	Description
High	Low	Charge cycle has started, C/10 has not been reached and charging is proceeding normally.
Low	Low	Charge cycle has started, C/10 has not been reached, but the charge current and timer have been paused due to an NTC out-of-temperature condition.
High	30µA pull-down	C/10 has been reached and charging is proceeding normally.
Low	30µA pull-down	C/10 has been reached but the charge current and timer have paused due to an NTC out-of-temperature condition.
High	High	Normal timeout (charging has terminated).
Low	High	If $\overline{FAULT}$ goes low and $\overline{CHRG}$ goes high impedance simultaneously, then the LTC4053 has timed out due to a bad cell (V_{BAT} <2.48V after one-quarter the programmed charge time). If $\overline{CHRG}$ goes high impedance first, then the LTC4053 has timed out normally (charging has terminated), but NTC is indicating an out-of-temperature condition.

$\overline{CHRG}$ Status Output Pin

When the charge cycle starts, the $\overline{CHRG}$ pin is pulled to ground by an internal N-channel MOSFET capable of driving an LED. When the charge current drops to 10% of the full-scale current (C/10), the N-channel MOSFET is latched off and a weak 30µA current source to ground is connected to the $\overline{CHRG}$ pin. After a time-out occurs, the pin assumes a high impedance state. By using two different value pull-up resistors a microprocessor can detect three states from this pin (charging, C/10 and time-out). See Figure 3.

When the LTC4053 is in charge mode, the $\overline{CHRG}$ pin is pulled low by the internal N-channel MOSFET. To detect this mode, force the digital output pin, OUT, high and measure the voltage at the $\overline{CHRG}$ pin. The N-channel MOSFET will pull the pin low even with the 2k pull-up resistor. Once the charge current drops to 10% of the

APPLICATIONS INFORMATION

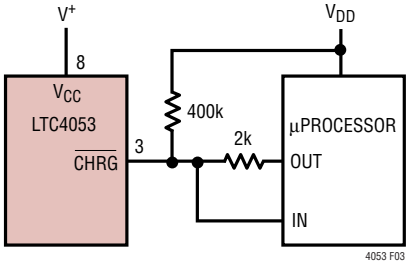

Figure 3. Microprocessor Interface

full-scale current (C/10), the N-channel MOSFET is turned off and a 30µA current source is connected to the CHRG pin. The IN pin will then be pulled high by the 2k pull-up. By forcing the OUT pin to a high impedance state, the current source will pull the pin low through the 400k resistor. When the internal timer has expired, the CHRG pin will assume a high impedance state and the 400k resistor will then pull the pin high to indicate that charging has terminated.

NTC Thermistor

The battery temperature is measured by placing a negative temperature coefficient (NTC) thermistor close to the battery pack. The NTC circuitry is shown in Figure 4. To use this feature, connect a 10k NTC thermistor between the NTC pin and ground and a resistor (R_{HOT}) from the NTC pin to V_{CC}. R_{HOT} should be a 1% resistor with a value equal to the value of the chosen NTC thermistor at 50°C (this value is 4.1k for a Vishay NTHS0603N02N1002J thermistor). The LTC4053 goes into hold mode when the resistance of the NTC thermistor drops below 4.1k which should be approximately 50°C. The hold mode freezes the timer and stops the charge cycle until the thermistor indicates a return to a valid temperature. As the temperature drops, the resistance of the NTC thermistor rises. The LTC4053 is designed to go into hold mode when the value of the NTC thermistor increases to seven times the value of R_{HOT}. For a Vishay NTHS0603N02N1002J thermistor, this value is 28.7k which corresponds to approximately 0°C. The hot and cold comparators each have approximately 2°C of hysteresis to prevent oscillation about the trip point. The NTC function can be disabled by grounding the NTC pin.

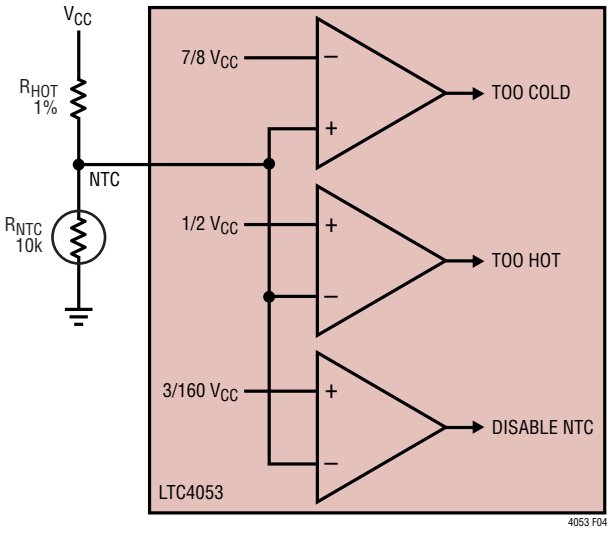

Figure 4

Thermistors

The LTC4053 NTC trip points were designed to work with thermistors whose resistance-temperature characteristics follow Vishay Dale's "R-T Curve 2". The Vishay NTHS0603N02N1002J is an example of such a thermistor. However, Vishay Dale has many thermistor products that follow the "R-T Curve 2" characteristic in a variety of sizes. Futhermore, any thermistor whose ratio of R_{COLD} to R_{HOT} is about 7.0 will also work (Vishay Dale R-T Curve 2 shows a ratio of R_{COLD} to R_{HOT} of 2.816/0.4086 = 6.9).

NTC Layout Considerations

It is important that the NTC thermistor not be in close thermal contact with the LTC4053. Because the LTC4053 package can reach temperatures in excess of the 50°C trip point, the NTC function can cause a hysteretic oscillation which turns the charge current on and off according to the package temperature rather than the battery temperature. This problem can be eliminated by thermally coupling the NTC thermistor to the battery and not to the LTC4053.

Furthermore, it is essential that the V_{CC} connection to R_{HOT} is made according to standard Kelvin sense techniques. Since V_{CC} is a high current path into the LTC4053, it is essential to minimize voltage drops between the V_{CC} input pin and the top of R_{HOT}.

APPLICATIONS INFORMATION

NTC Trip Point Errors

When a 1% resistor is used for R_{HOT}, the major error in the 50°C trip point is determined by the tolerance of the NTC thermistor. A typical 10k NTC thermistor has a ±10% tolerance. By looking up the temperature coefficient of the thermistor at 50°C, the tolerance error can be calculated in degrees centigrade. Consider the Vishay NTHS0603N02N1002J thermistor which has a temperature coefficient of –3.3%/°C at 50°C. Dividing the tolerance by the temperature coefficient, ±10%/(3.3%/°C) = ±3°C, gives the temperature error of the hot trip point.

The cold trip point is a little more complicated because its error depends on the tolerance of the NTC thermistor and the degree to which the ratio of its value at 0°C and its value at 50°C varies from 7 to 1. Therefore, the cold trip point error can be calculated using the tolerance, TOL, the temperature coefficient of the thermistor at 0°C, TC (in %/°C), the value of the thermistor at 0°C, R_{COLD}, and the value of the thermistor at 50°C, R_{HOT}. The formula is:

$$\text{Temperature Error (°C)} = \frac{\left(\frac{1+TOL}{7} \bullet \frac{R_{COLD}}{R_{HOT}} - 1\right) \bullet 100}{TC}$$

For example, the Vishay NTHS0603N02N1002J thermistor with a tolerance of ±10%, TC of –4.5%/°C, and R_{COLD}/R_{HOT} of 6.89, has a cold trip point error of:

$$\text{Temperature Error (°C)} = \frac{\left(\frac{1\pm 0.10}{7} \bullet 6.89 - 1\right) \bullet 100}{-4.5}$$

$$= -1.8°C, +2.5°C$$

If a thermistor with a tolerance less than ±10% is used, the trip point errors begin to depend on errors other than thermistor tolerance including the input offset voltage of the internal comparators of the LTC4053 and the effects of internal voltage drops due to high charging currents.

Constant-Current/Constant-Voltage/ Constant-Temperature

The LTC4053 uses a unique architecture to charge a battery in a constant-current, constant-voltage, constant-temperature fashion. Figure 1 shows a simplified block diagram of the LTC4053. Three of the amplifier feedback loops shown control the constant-current, CA, constant-voltage, VA, and constant-temperature, TA modes. A fourth amplifier feedback loop, MA, is used to increase the output impedance of the current source pair, M1 and M2 (note that M1 is the internal P-channel power MOSFET). It ensures that the drain current of M1 is exactly 1000 times greater than the drain current of M2.

Amplifiers CA, TA, and VA are used in three separate feedback loops to force the charger into constant-current, temperature, or voltage mode, respectively. Diodes, D1, D2, and D3 provide priority to whichever loop is trying to reduce the charge current the most. The outputs of the other two amplifiers saturate low which effectively removes their loops from the system. When in constant-current mode, CA servos the voltage at the PROG pin to be precisely 1.50V (or 0.15V when in trickle-charge mode). TA limits the die temperature to approximately 105°C when in constant-temperature mode and the PROG pin voltage gives an indication of the charge current as discussed in “Programming Charge Current”. VA servos its inverting input to precisely 2.485V when in constant-voltage mode and the internal resistor divider made up of R1 and R2 ensures that the battery voltage is maintained at 4.2V. Again, the PROG pin voltage gives an indication of the charge current.

In typical operation, the charge cycle begins in constant-current mode with the current delivered to the battery equal to $1500V/R_{PROG}$. If the power dissipation of the LTC4053 results in the junction temperature approaching 105°C, the amplifier (TA) will begin decreasing the charge current to limit the die temperature to approximately 105°C. As the battery voltage rises, the LTC4053 either returns to constant-current mode or it enters constant-voltage mode straight from constant-temperature mode.

APPLICATIONS INFORMATION

Regardless of mode, the voltage at the PROG pin is proportional to the current being delivered to the battery.

Power Dissipation

The conditions that cause the LTC4053 to reduce charge current due to the thermal protection feedback can be approximated by considering the power dissipated in the IC. For high charge currents, the LTC4053 power dissipation is approximately:

$$P_D = (V_{CC} – V_{BAT}) • I_{BAT}$$

where P_D is the power dissipated, V_{CC} is the input supply voltage, V_{BAT} is the battery voltage, and I_{BAT} is the battery charge current. It is not necessary to perform any worst-case power dissipation scenarios because the LTC4053 will automatically reduce the charge current to maintain the die temperature at approximately 105°C. However, the approximate ambient temperature at which the thermal feedback begins to protect the IC is:

$$T_A = 105°C – P_D\theta_{JA}$$

$$T_A = 105°C – (V_{CC} – V_{BAT}) • I_{BAT} • \theta_{JA}$$

Example: Consider an LTC4053 operating from a 5V wall adapter providing 1.2A to a 3.75V Li-Ion battery. The ambient temperature above which the LTC4053 will begin to reduce the 1.2A charge current is approximately:

$$T_A = 105°C – (5V – 3.75V) • 1.2A • 40°C/W$$

$$T_A = 105°C – 1.5W • 40°C/W = 105°C – 60°C = 45°C$$

The LTC4053 can be used above 45°C, but the charge current will be reduced below 1.2A. The approximate charge current at a given ambient temperature can be approximated by:

$$I_{BAT} = \frac{105°C – T_A}{(V_{CC} – V_{BAT}) • \theta_{JA}}$$

Consider the above example with an ambient temperature of 55°C. The charge current will be reduced to approximately:

$$I_{BAT} = \frac{105°C – 55°C}{(5V – 3.75V) • 40°C/W} = \frac{50°C}{50°C/A} = 1A$$

Furthermore, the voltage at the PROG pin will change proportionally with the charge current as discussed in the Programming Charge Current section.

It is important to remember that LTC4053 applications do not need to be designed for worst-case thermal conditions since the IC will automatically reduce power dissipation when the junction temperature reaches approximately 105°C.

Board Layout Considerations

The ability to deliver maximum charge current under all conditions require that the exposed metal pad on the backside of the LTC4053 package be soldered to the PC board ground. Correctly soldered to a 2500mm^2 double-sided 1oz. copper board the LTC4053 has a thermal resistance of approximately 40°C/W. Failure to make thermal contact between the exposed pad on the backside of the package and the copper board will result in thermal resistances far greater than 40°C/W. As an example, a correctly soldered LTC4053 can deliver over 1250mA to a battery from a 5V supply at room temperature. Without a backside thermal connection, this number could drop to less than 500mA.

V_{CC} Bypass Capacitor

Many types of capacitors can be used for input bypassing. However, caution must be exercised when using multilayer ceramic capacitors. Because of the self resonant and high Q characteristics of some types of ceramic capacitors, high voltage transients can be generated under some start-up conditions, such as connecting the charger input to a hot power source. For more information refer to Application Note 88.

Stability

The constant-voltage mode feedback loop is stable without any compensation provided that a battery is connected. However, a 1µF capacitor with a 1Ω series resistor to GND is recommended at the BAT pin to keep ripple voltage low when the battery is disconnected.

In the constant-current mode it is the PROG pin that is in the feedback loop and not the battery. The constant-current mode stability is affected by the impedance at the

APPLICATIONS INFORMATION

PROG pin. With no additional capacitance on the PROG pin, stability is acceptable with program resistor values as high as 50k. However, additional capacitance on this node reduces the maximum allowed program resistor. The pole frequency at the PROG pin should be kept above 500kHz. Therefore, if the PROG pin is loaded with a capacitance, C, the following equation should be used to calculate the maximum resistance value for R_{PROG}:

$$R_{PROG} < 1/(6.283 \bullet 5 \times 10^5 \bullet C)$$

Average, rather than instantaneous, battery current may be of interest to the user. For example, if a switching power supply operating in low-current mode is connected in parallel with the battery the average current being pulled out of the BAT pin is typically of more interest than the instantaneous current pulses. In such a case, a simple RC filter can be used on the PROG pin to measure the average battery current as shown in Figure 5. A 10k resistor is added between the PROG pin and the filter capacitor and monitoring circuit to ensure stability.

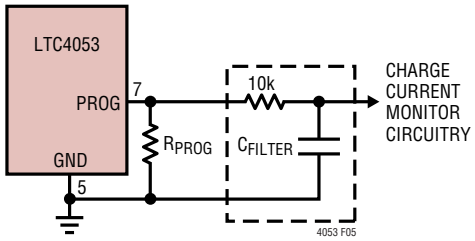

Figure 5. Isolating Capacitive Load on PROG Pin and Filtering

PACKAGE DESCRIPTION

DD Package
10-Lead Plastic DFN (3mm × 3mm)
(Reference LTC DWG # 05-08-1698)

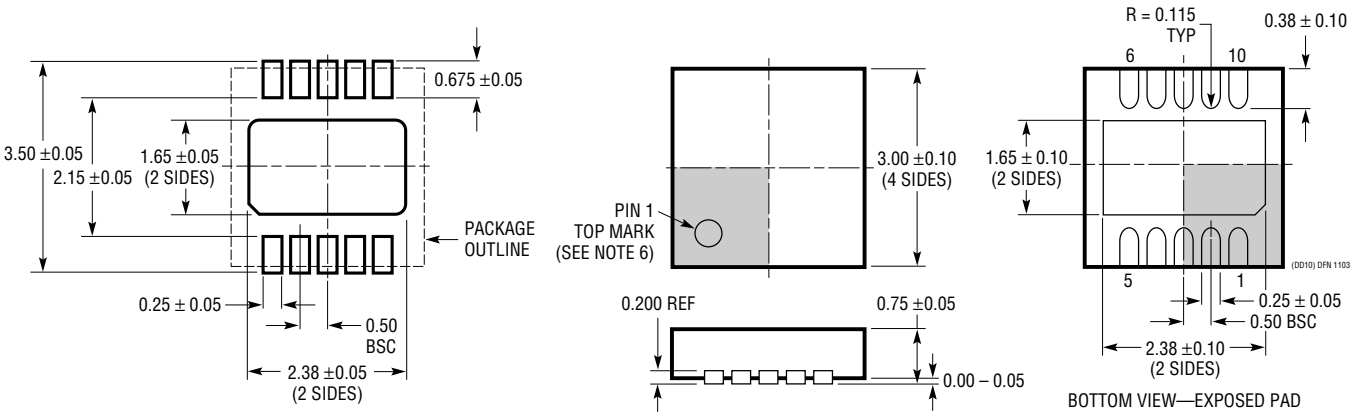

RECOMMENDED SOLDER PAD PITCH AND DIMENSIONS

NOTE:
1. DRAWING TO BE MADE A JEDEC PACKAGE OUTLINE M0-229 VARIATION OF (WEED-2). CHECK THE LTC WEBSITE DATA SHEET FOR CURRENT STATUS OF VARIATION ASSIGNMENT
2. DRAWING NOT TO SCALE
3. ALL DIMENSIONS ARE IN MILLIMETERS
4. DIMENSIONS OF EXPOSED PAD ON BOTTOM OF PACKAGE DO NOT INCLUDE MOLD FLASH. MOLD FLASH, IF PRESENT, SHALL NOT EXCEED 0.15mm ON ANY SIDE
5. EXPOSED PAD SHALL BE SOLDER PLATED
6. SHADED AREA IS ONLY A REFERENCE FOR PIN 1 LOCATION ON THE TOP AND BOTTOM OF PACKAGE

PACKAGE DESCRIPTION

MSE Package
10-Lead Plastic MSOP
(Reference LTC DWG # 05-08-1663)

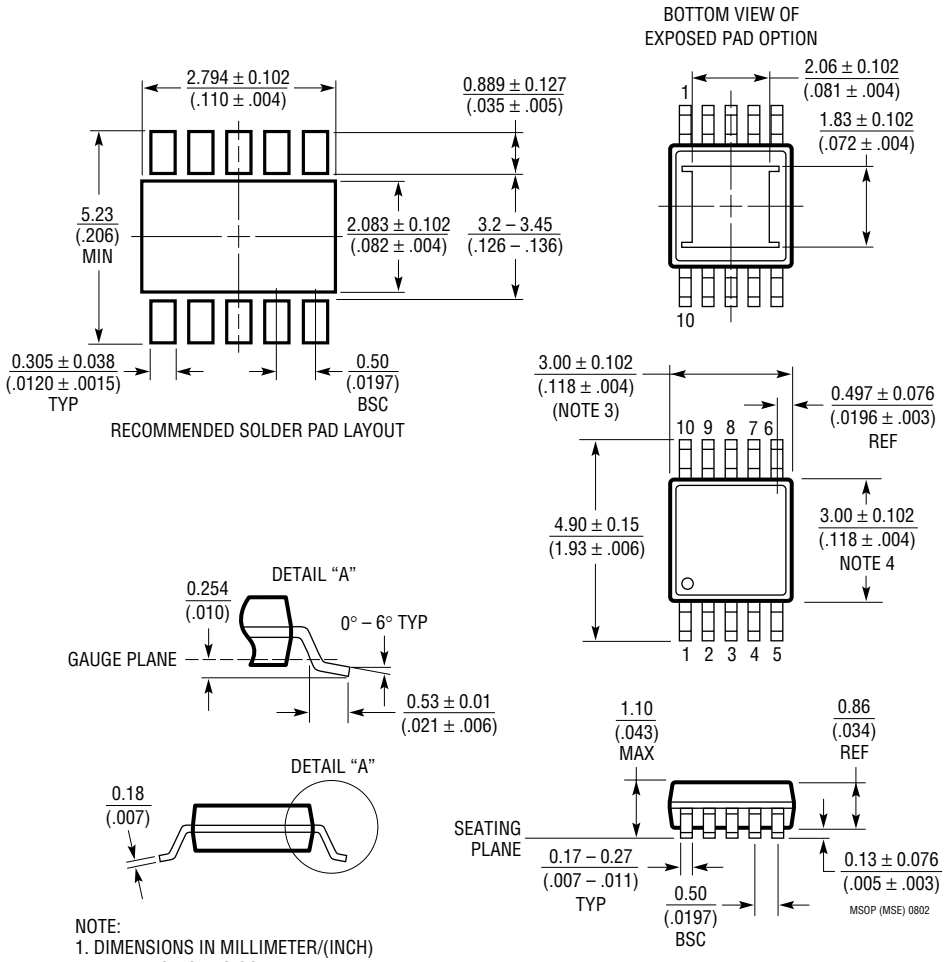

NOTE:
1. DIMENSIONS IN MILLIMETER/(INCH)
2. DRAWING NOT TO SCALE
3. DIMENSION DOES NOT INCLUDE MOLD FLASH, PROTRUSIONS OR GATE BURRS.
   MOLD FLASH, PROTRUSIONS OR GATE BURRS SHALL NOT EXCEED 0.152mm (.006") PER SIDE
4. DIMENSION DOES NOT INCLUDE INTERLEAD FLASH OR PROTRUSIONS.
   INTERLEAD FLASH OR PROTRUSIONS SHALL NOT EXCEED 0.152mm (.006") PER SIDE
5. LEAD COPLANARITY (BOTTOM OF LEADS AFTER FORMING) SHALL BE 0.102mm (.004") MAX

Information furnished by Linear Technology Corporation is believed to be accurate and reliable. However, no responsibility is assumed for its use. Linear Technology Corporation makes no representation that the interconnection of its circuits as described herein will not infringe on existing patent rights.

TYPICAL APPLICATIONS

USB/Wall Adapter Power Li-Ion Battery Charger

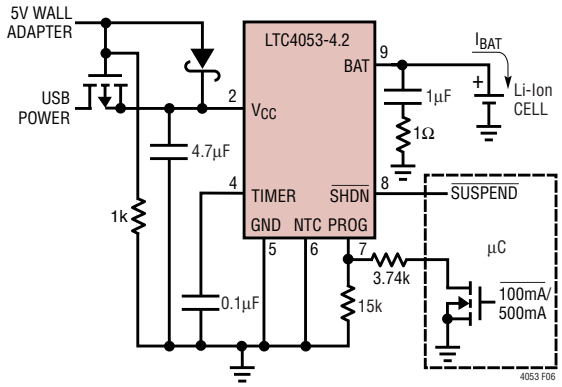

Li-Ion Battery Charger with Reverse Polarity Input Protection

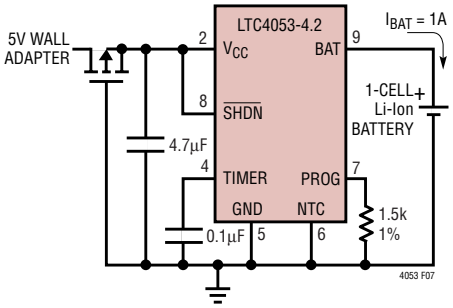

Full Featured Single Cell Li-Ion Charger

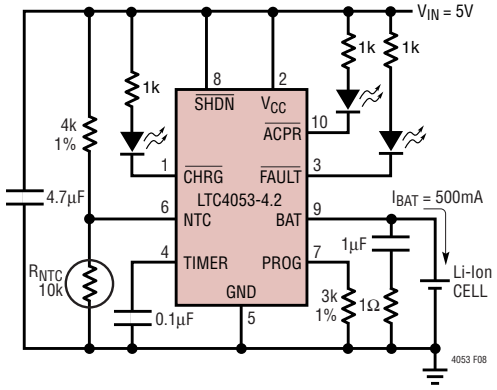

RELATED PARTS

PART NUMBER	DESCRIPTION	COMMENTS
LT1571	200kHz/500kHz Switching Battery Charger	Up to 1.5A Charge Current; Preset and Adjustable Battery Voltages
LTC1729	Lithium-Ion Battery Charger Termination Controllers	Time or Charge Current Termination, Preconditioning 8-Lead MSOP
LTC1730	Lithium-Ion Battery Pulse Charger	No Blocking Diode Required, Current Limit for Maximum Safety
LTC1731	Lithium-Ion Linear Battery Charger Controller	Simple Charger uses External FET, Features Preset Voltages, C/10 Charger Detection and Programmable Timer
LTC1732	Lithium-Ion Linear Battery Charger Controller	Simple Charger uses External FET, Features Preset Voltages, C/10 Charger Detection and Programmable Timer, Input Power Good Indication
LTC1733	Monolithic Lithium-Ion Linear Battery Charger	Standalone Charger with Programmable Timer, Up to 1.5A Charge Current
LTC1734	Lithium-Ion Linear Battery Charger in ThinSOT™	Simple ThinSOT Charger, No Blocking Diode, No Sense Resistor Needed
LTC1734L	Lithium-Ion Linear Battery Charger Controller	50mA to 180mA, No Blocking Diode, No Sense Resistor Needed
LTC4050	Lithium-Ion Linear Battery Charger Controller	Simple Charger uses External FET, Thermistor Input for Battery Temperature Sensing
LTC4052	Lithium-Ion Linear Battery Pulse Charger	Fully Integrated, Standalone Pulse Charger, Minimal Heat Dissipation, Overcurrent Protection
LTC4054	Standalone Lithium-Ion Linear Battery Charger in ThinSOT	Up to 800mA Charge Current, Thermal Regulation, USB Compatible, Charge Termination
LTC4056	Standalone Lithium-Ion Linear Battery Charger Controller in ThinSOT	Up to 700mA Charge Current, Charge Termination, Continuous Charging with Poorly Regulated or High Impedance Input Supplies

ThinSOT is a trademark of Linear Technology Corporation.

Linear Technology Corporation
1630 McCarthy Blvd., Milpitas, CA 95035-7417
(408) 432-1900 • FAX: (408) 434-0507 • www.linear.com
LT/LT 0705 REV A • PRINTED IN USA
© LINEAR TECHNOLOGY CORPORATION 2001