High Efficiency Standalone Nickel Battery Charger

FEATURES

- **Complete NiMH/NiCd Charger for 1 to 16 Cells**
- **No Microcontroller or Firmware Required**
- **550kHz PWM Current Source Controller**
- **No Audible Noise with Ceramic Capacitors**
- **Wide Input Voltage Range: 5.5V to 34V**
- Programmable Charge Current: 5% Accuracy
- Automatic Trickle Precharge
- –ΔV Fast Charge Termination
- Optional ΔT/Δt Fast Charge Termination
- Optional Temperature Qualification
- Automatic NiMH Top-Off Charge
- Programmable Timer
- Automatic Recharge
- Multiple Status Outputs
- Micropower Shutdown
- 16-Lead Thermally Enhanced TSSOP Package

APPLICATIONS

- Integrated or Standalone Battery Charger
- Portable Instruments or Consumer Products
- Battery-Powered Diagnostics and Control
- Back-Up Battery Management

DESCRIPTION

The LTC®4010 provides a complete, cost-effective nickel battery fast charge solution in a small package using few external components. A 550kHz PWM current source controller and all necessary charge initiation, monitoring and termination control circuitry are included.

The LTC4010 automatically senses the presence of a DC adapter and battery insertion or removal. When an external DC source is not present, the LTC4010 enters shutdown and supply current drawn from an installed battery drops to the lowest possible level. Heavily discharged batteries are precharged with a trickle current. The LTC4010 can simultaneously use both –ΔV and ΔT/Δt fast charge termination techniques and can detect various battery faults. If necessary, a top-off charge is automatically applied to NiMH batteries after fast charging is completed. The IC will also resume charging if the battery self-discharges after a full charge cycle.

All LTC4010 charging operations are qualified by actual charge time and maximum average cell voltage. Charging may also be gated by minimum and maximum temperature limits. NiMH or NiCd fast charge termination parameters are pin selectable.

LT, LTC, LTM, Linear Technology and the Linear logo are registered trademarks of Linear Technology Corporation. All other trademarks are the property of their respective owners.

TYPICAL APPLICATION

2A NiMH Battery Charger

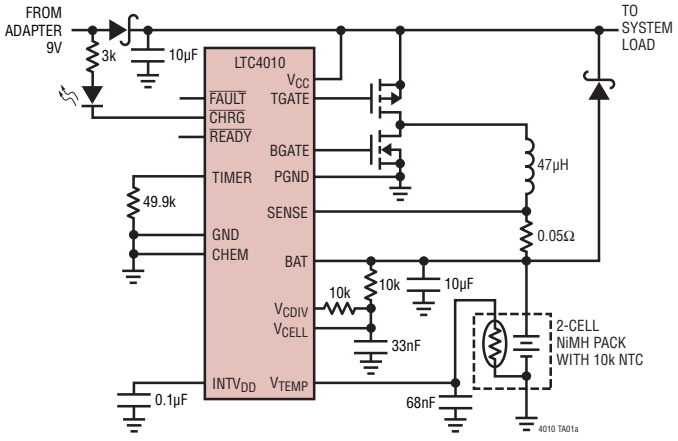

2A NiMH Charge Cycle at 1C

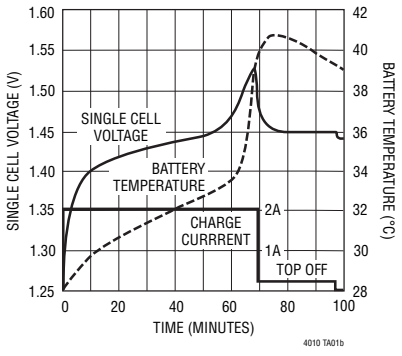

ABSOLUTE MAXIMUM RATINGS

(Note 1)

V_{CC} (Input Supply) to GND ..... –0.3V to 36V
$\overline{FAULT}$, $\overline{CHRG}$, V_{CELL}, V_{CDIV}, SENSE,
BAT or $\overline{READY}$ to GND ..... –0.3V to V_{CC} + 0.3V
SENSE to BAT ..... ±0.3V
CHEM, V_{TEMP} or TIMER to GND ..... –0.3V to 3.5V
PGND to GND ..... ±0.3V
Operating Ambient Temperature Range
(Note 2) ..... 0°C to 85°C
Operating Junction Temperature (Note 3) ..... 125°C
Storage Temperature Range ..... –65°C to 150°C
Lead Temperature (Soldering, 10 sec) ..... 300°C

PIN CONFIGURATION

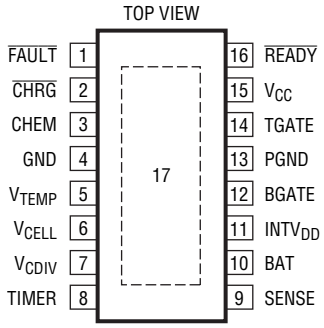

FE PACKAGE
16-LEAD PLASTIC TSSOP
T_{JMAX} = 125°C, θ_{JA} = 38°C/W
EXPOSED PAD (PIN 17) IS GND. MUST BE SOLDERED TO PCB TO OBTAIN SPECIFIED THERMAL RESISTANCE

ORDER INFORMATION

LEAD FREE FINISH	TAPE AND REEL	PART MARKING	PACKAGE DESCRIPTION	TEMPERATURE RANGE
LTC4010CFE#PBF	LTC4010CFE#TRPBF	4010CFE	16-Lead Plastic TSSOP	0°C to 85°C
LEAD BASED FINISH	**TAPE AND REEL**	**PART MARKING**	**PACKAGE DESCRIPTION**	**TEMPERATURE RANGE**
LTC4010CFE	LTC4010CFE#TR	4010CFE	16-Lead Plastic TSSOP	0°C to 85°C

Consult LTC Marketing for parts specified with wider operating temperature ranges.

For more information on lead free part marking, go to: http://www.linear.com/leadfree/
For more information on tape and reel specifications, go to: http://www.linear.com/tapeandreel/

ELECTRICAL CHARACTERISTICS

(Note 4) The ● indicates specifications which apply over the full operating temperature range, otherwise specifications are at T_A = 25°C. V_{CC} = 12V, BAT = 4.8V, GND = PGND = 0V, unless otherwise noted.

SYMBOL	PARAMETER	CONDITIONS		MIN	TYP	MAX	UNITS
V_{CC} Supply							
V_{CC}	Input Voltage Range		●	4.5		34	V
I_{SHDN}	Shutdown Quiescent Current (Note 8)	V_{CC} = BAT = 4.8V			5	10	µA
I_Q	Quiescent Current	Waiting to Charge (Pause)	●		3	5	mA
I_{CC}	Operating Current	Fast Charge State, No Gate Load	●		5	9	mA
V_{UVLO}	Undervoltage Threshold Voltage	V_{CC} Increasing	●	3.85	4.2	4.45	V
$V_{UV(HYST)}$	Undervoltage Hysteresis Voltage				170		mV
V_{SHDNI}	Shutdown Threshold Voltage	V_{CC} – BAT, V_{CC} Increasing	●	45	65	90	mV
V_{SHDND}	Shutdown Threshold Voltage	V_{CC} – BAT, V_{CC} Decreasing	●	15	35	60	mV
V_{CE}	Charge Enable Threshold Voltage	V_{CC} – BAT, V_{CC} Increasing	●	400	510	600	mV
$INTV_{DD}$ Regulator							
V_{DD}	Output Voltage	No Load	●	4.5	5	5.5	V
I_{DD}	Short-Circuit Current (Note 5)	$INTV_{DD}$ = 0V	●	–100	–50	–10	mA
$INTV_{DD(MIN)}$	Output Voltage	V_{CC} = 4.5V, I_{DD} = –10mA	●	3.85			V

ELECTRICAL CHARACTERISTICS

The ● indicates specifications which apply over the full operating temperature range, otherwise specifications are at T_A = 25°C. V_{CC} = 12V, BAT = 4.8V, GND = PGND = 0V, unless otherwise noted.

SYMBOL	PARAMETER	CONDITIONS		MIN	TYP	MAX	UNITS
PWM Current Source							
V_{FS}	BAT – SENSE Full-Scale Regulation Voltage (Fast Charge)	0.3V < BAT < V_{CC} – 0.3V (Note 8) BAT = 4.8V	 ●	95 95	100 100	105 105	mV mV
V_{PC}	BAT – SENSE Precharge Regulation Voltage	0.3V < BAT < V_{CC} – 0.3V (Note 8) BAT = 4.8V	 ●	16 16	20 20	24 24	mV mV
V_{TC}	BAT – SENSE Top-Off Charge Regulation Voltage	0.3V < BAT < V_{CC} – 0.3V (Note 8) BAT = 4.8V	 ●	6.5 6.5	10 10	13.5 13.5	mV mV
ΔV_{LI}	BAT – SENSE Line Regulation	5.5V < V_{CC} < 25V, Fast Charge			±0.3		mV
I_{BAT}	BAT Input Bias Current	0.3V < BAT < V_{CC} – 0.1V		–2		2	mA
I_{SENSE}	SENSE Input Bias Current	SENSE = BAT			50	150	µA
I_{OFF}	Input Bias Current, (V_{CELL} = 0V)	SENSE BAT	● ●	–1 0	0 2	1 6	µA µA
f_{TYP}	Typical Switching Frequency		●	460	550	640	kHz
f_{MIN}	Minimum Switching Frequency		●	20	30		kHz
DC_{MAX}	Maximum Duty Cycle			98	99		%
$V_{OL(TG)}$	TGATE Output Voltage Low (V_{CC} – TGATE) (Note 6)	V_{CC} > 9V, No Load V_{CC} < 7V, No Load	● ●	5 V_{CC} – 0.5	5.6 V_{CC}	8.75	V V
$V_{OH(TG)}$	TGATE Output Voltage High	V_{CC} – TGATE, No Load	●		0	50	mV
$t_{R(TG)}$	TGATE Rise Time	C_{LOAD} = 3nF, 10% to 90%			35	100	ns
$t_{F(TG)}$	TGATE Fall Time	C_{LOAD} = 3nF, 10% to 90%			45	100	ns
$V_{OL(BG)}$	BGATE Output Voltage Low	No Load	●		0	50	mV
$V_{OH(BG)}$	BGATE Output Voltage High	No Load	●	$INTV_{DD}$ – 0.075	$INTV_{DD}$		V
$t_{R(BG)}$	BGATE Rise Time	C_{LOAD} = 1.6nF, 10% to 90%			30	80	ns
$t_{F(BG)}$	BGATE Fall Time	C_{LOAD} = 1.6nF, 10% to 90%			15	80	ns
ADC Inputs							
I_{LEAK}	Analog Channel Leakage	0V < V_{CELL} < 2V			±100		nA
Charger Thresholds							
V_{BP}	Battery Present Threshold Voltage		●	320	350	370	mV
V_{BOV}	Battery Overvoltage		●	1.815	1.95	2.085	V
V_{MFC}	Minimum Fast Charge Voltage		●	850	900	950	mV
V_{FCBF}	Fast Charge Battery Fault Voltage		●	1.17	1.22	1.27	V
ΔV_{TERM}	–ΔV Termination	CHEM OPEN (NiCd) CHEM = 0V (NiMH)	● ●	16 6	20 10	25 14	mV mV
V_{AR}	Automatic Recharge Voltage	V_{CELL} Decreasing	●	1.260	1.325	1.390	V
ΔT_{TERM}	ΔT Termination (Note 7)	CHEM = 3.3V (NiCd) CHEM = 0V (NiMH)	● ●	1.3 0.5	2 1	2.7 1.5	°C/min °C/min
T_{MIN}	Minimum Charging Temperature (Note 7)	V_{TEMP} Increasing	●	0	5	9	°C
T_{MAXI}	Maximum Charge Initiation Temperature (Note 7)	V_{TEMP} Decreasing, Not Charging	●	41.5	45	47	°C
T_{MAXC}	Maximum Charging Temperature (Note 7)	V_{TEMP} Decreasing, Charging	●	57	60	63	°C
$V_{TEMP(D)}$	V_{TEMP} Disable Threshold Voltage		●	2.8		3.3	V
$V_{TEMP(P)}$	Pause Threshold Voltage		●	130		280	mV

ELECTRICAL CHARACTERISTICS

The ● indicates specifications which apply over the full operating temperature range, otherwise specifications are at T_A = 25°C. V_{CC} = 12V, BAT = 4.8V, GND = PGND = 0V, unless otherwise noted.

SYMBOL	PARAMETER	CONDITIONS		MIN	TYP	MAX	UNITS
Charger Timing							
Δt_{TIMER}	Internal Time Base Error		●	–10		10	%
Δt_{MAX}	Programmable Timer Error	R_{TIMER} = 49.9k	●	–20		20	%
Status and Chemistry Select							
V_{OL}	Output Voltage Low (I_{LOAD} = 10mA)	V_{CDIV} All Other Status Outputs	● ●		435 300	700 600	mV mV
I_{LKG}	Output Leakage Current	All Status Outputs Inactive, $V_{OUT} = V_{CC}$	●	–10		10	µA
$I_{IH(VCDIV)}$	Input Current High	$V_{CDIV} = V_{BAT}$ (Shutdown)	●	–1		1	µA
V_{IL}	Input Voltage Low	CHEM (NiMH)	●			900	mV
V_{IH}	Input Voltage High	CHEM (NiCd)	●	2.85			V
I_{IL}	Input Current Low	CHEM = GND	●	–20		–5	µA
I_{IH}	Input Current High	CHEM = 3.3V	●	–20		20	µA

Note 1: Stresses beyond those listed under Absolute Maximum Ratings may cause permanent damage to the device. Exposure to any Absolute Maximum Rating condition for extended periods may affect device reliability and lifetime.

Note 2: The LTC4010E is guaranteed to meet performance specifications from 0°C to 70°C. Specifications over the 0°C to 85°C operating temperature range are assured by design, characterization and correlation with statistical process controls.

Note 3: Operating junction temperature T_J (in °C) is calculated from the ambient temperature T_A and the total continuous package power dissipation P_D (in watts) by the formula:

$$T_J = T_A + \theta_{JA} \bullet P_D$$

Refer to the Applications Information section for details. This IC includes overtemperature protection that is intended to protect the device during momentary overload conditions. Junction temperature will exceed 125°C when overtemperature protection is active. Continuous operation above the specified maximum operating junction temperature may result in device degradation or failure.

Note 4: All current into device pins are positive. All current out of device pins are negative. All voltages are referenced to GND, unless otherwise specified.

Note 5: Output current may be limited by internal power dissipation. Refer to the Applications Information section for details.

Note 6: Either TGATE V_{OH} may apply for 7.5V < V_{CC} < 9V.

Note 7: These limits apply specifically to the thermistor network shown in Figure 5 in the Applications Information section with a β of 3750 and are guaranteed by specific V_{TEMP} voltage measurements during test.

Note 8: These limits are guaranteed by correlation to wafer level measurements.

TYPICAL PERFORMANCE CHARACTERISTICS

NiCd Charge Cycle at 1C

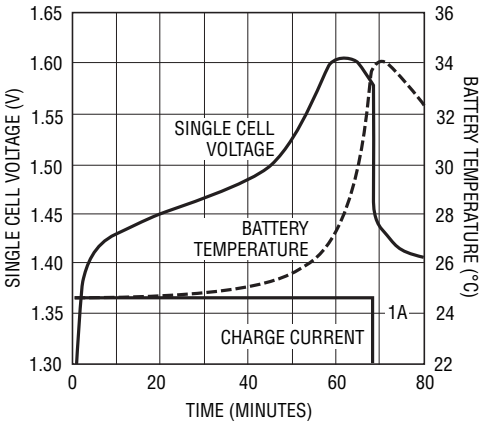

NiCd Charge Cycle at 2C

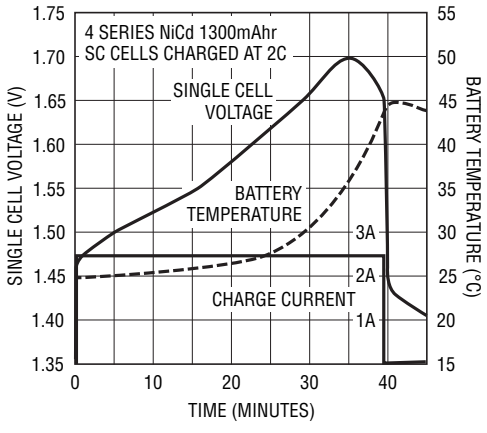

TYPICAL PERFORMANCE CHARACTERISTICS

NiMH Charge Cycle at 0.5C

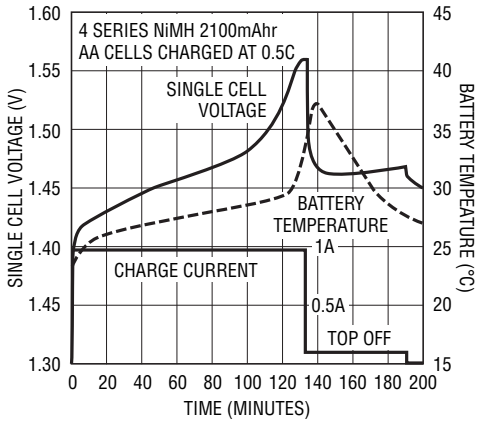

4010 G03

Battery Present Threshold Voltage (per Cell)

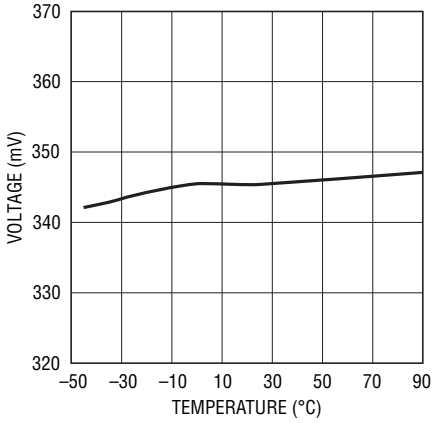

4010 G04

Minimum Fast Charge Threshold Voltage (per Cell)

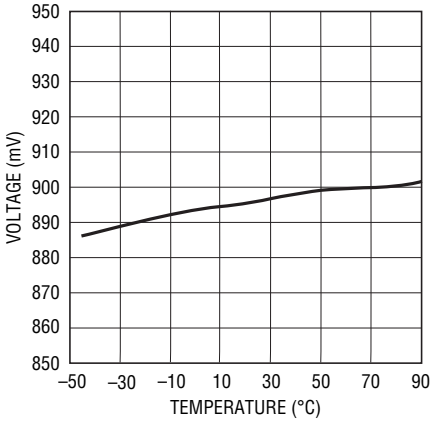

4010 G05

Automatic Recharge Threshold Voltage (per Cell)

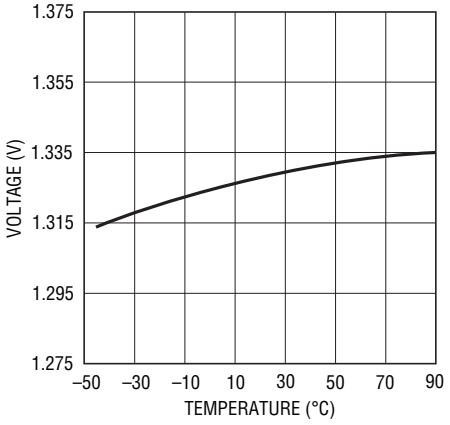

4010 G06

Battery Overvoltage Threshold Voltage (per Cell)

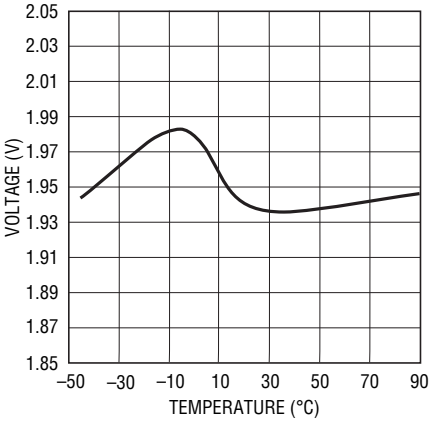

4010 G07

–ΔV Termination Voltage (per Cell)

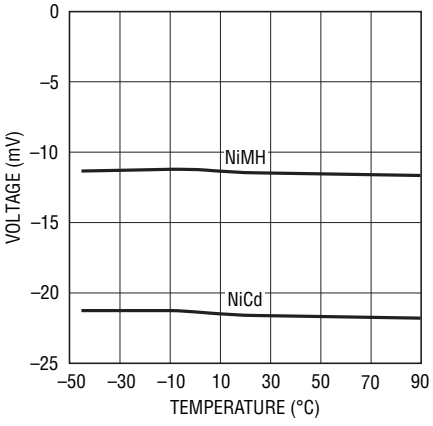

4010 G08

Programmable Timer Accuracy

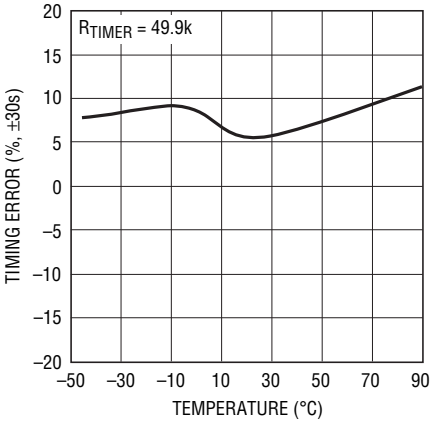

4010 G09

Charge Current Accuracy

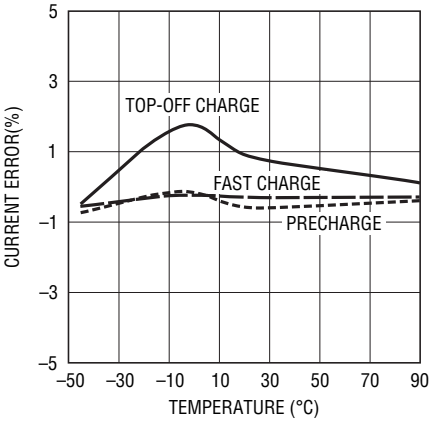

4010 G10

PWM Switching Frequency

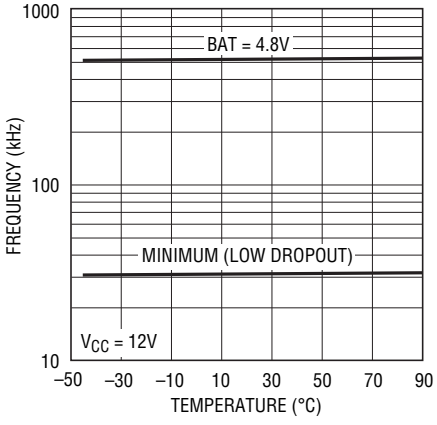

4010 G11

TYPICAL PERFORMANCE CHARACTERISTICS

Charger Efficiency

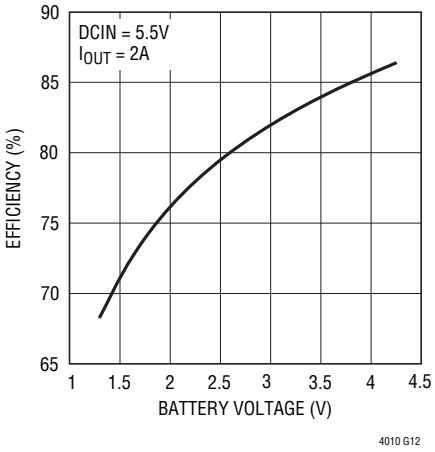

Charger Efficiency

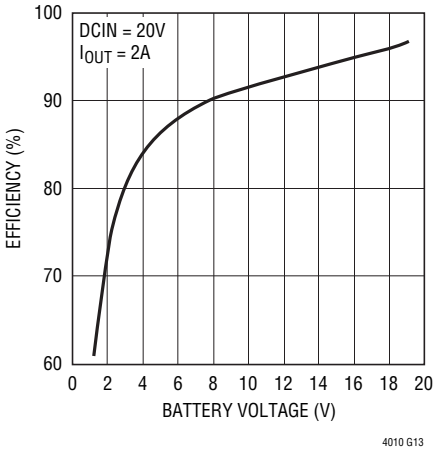

Charger Soft-Start

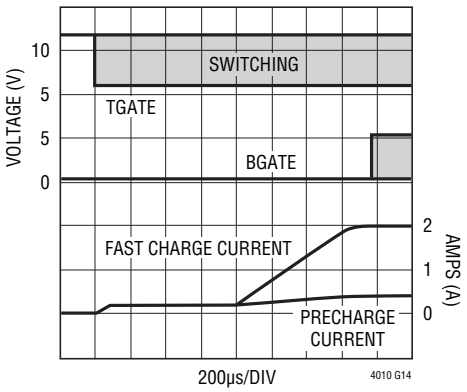

Fast Charge Current Line Regulation

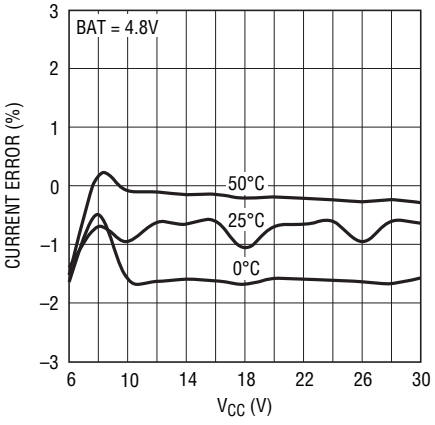

Fast Charge Current Output Regulation

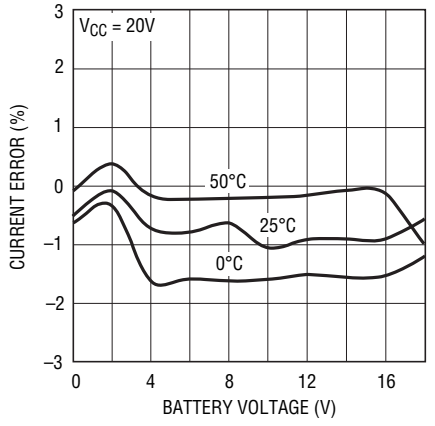

Shutdown Quiescent Current

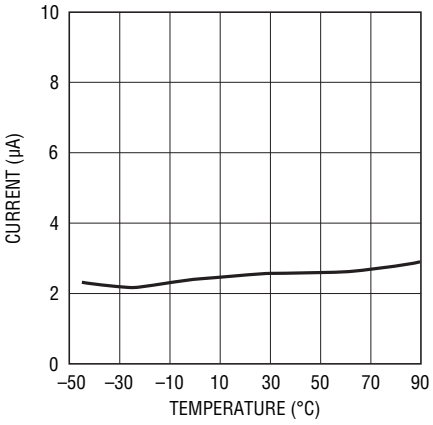

PWM Input Bias Current (OFF)

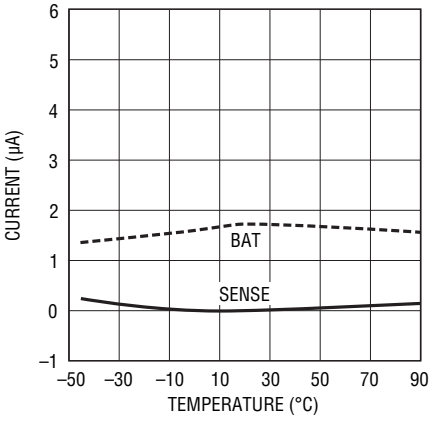

Undervoltage Lockout Threshold Voltage

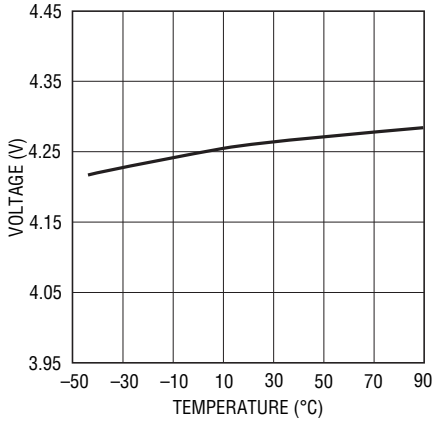

Shutdown Threshold Voltage (V_{CC} – BAT)

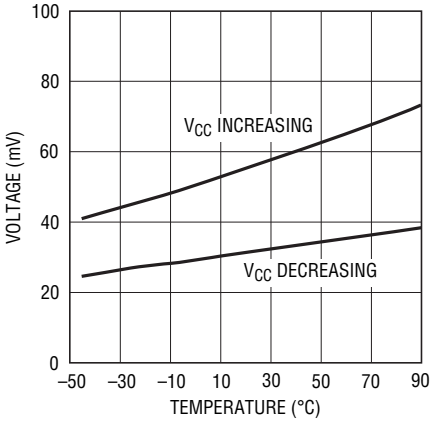

TYPICAL PERFORMANCE CHARACTERISTICS

Charge Enable Threshold Voltage (V_{CC} – BAT)

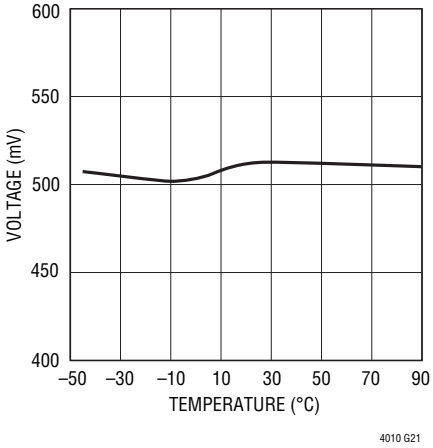

Thermistor Disable Threshold Voltage

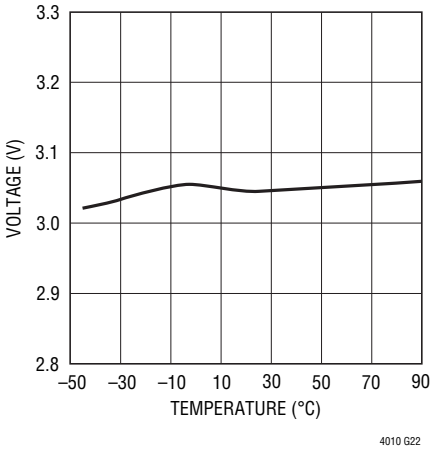

Pause Threshold Voltage

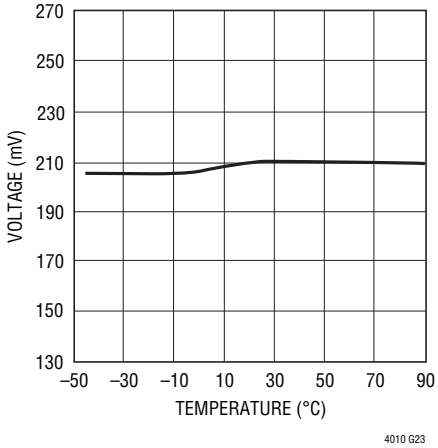

$INTV_{DD}$ Voltage

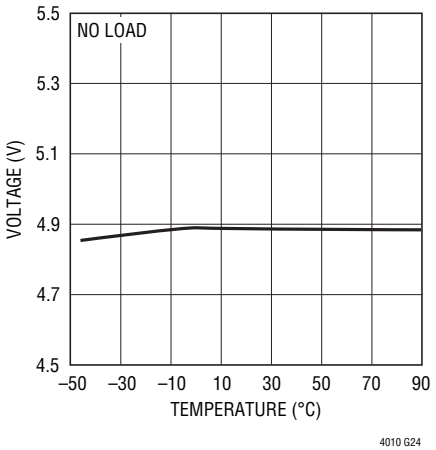

$INTV_{DD}$ Short-Circuit Current

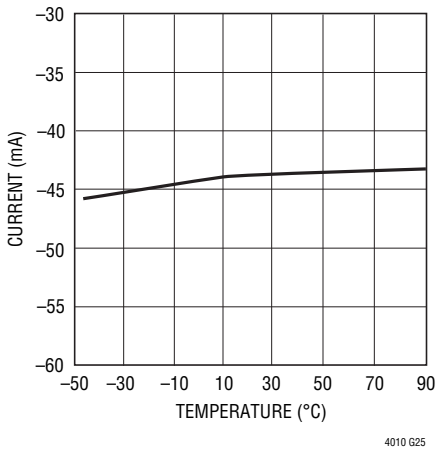

PIN FUNCTIONS

$\overline{FAULT}$ (Pin 1): Active-Low Fault Indicator Output. The LTC4010 indicates various battery and internal fault conditions by connecting this pin to GND. Refer to the Operation and Applications Information sections for further details. This output is capable of driving an LED and should be left floating if not used. $\overline{FAULT}$ is an open-drain output to GND with an operating voltage range of GND to V_{CC}.

$\overline{CHRG}$ (Pin 2): Active-Low Charge Indicator Output. The LTC4010 indicates it is providing charge to the battery by connecting this pin to GND. Refer to the Operation and Applications Information sections for further details. This output is capable of driving an LED and should be left floating if not used. $\overline{CHRG}$ is an open-drain output to GND with an operating voltage range of GND to V_{CC}.

CHEM (Pin 3): Battery Chemistry Selection Input. This pin should be wired to GND to select NiMH fast charge termination parameters. If a voltage greater than 2.85V is applied to this pin, or it is left floating, NiCd parameters are used. Refer to the Applications Information section for further details. Operating voltage range is GND to 3.3V.

PIN FUNCTIONS

GND (Pin 4): Ground. This pin provides a single-point ground for internal references and other critical analog circuits.

V_{TEMP} (Pin 5): Battery Temperature Input. An external 10k NTC thermistor may be connected between V_{TEMP} and GND to provide temperature-based charge qualification and additional fast charge termination control. Charging may also be paused by connecting the V_{TEMP} pin to GND. Refer to the Operation and Applications Information sections for complete details on external thermistor networks and charge control. If this pin is not used it should be wired to GND through 10k. Operating voltage range is GND to 3.3V.

V_{CELL} (Pin 6): Average Single-Cell Voltage Input. An external voltage divider between BAT and V_{CDIV} is attached to this pin to monitor the average single-cell voltage of the battery pack. The LTC4010 uses this information to protect against catastrophic battery overvoltage and to control the charging state. Refer to the Applications Information section for further details on the external divider network. Operating voltage range is GND to BAT.

V_{CDIV} (Pin 7): Average Cell Voltage Resistor Divider Termination. The LTC4010 connects this pin to GND provided the charger is not in shutdown. V_{CDIV} is an open-drain output to GND with an operating voltage range of GND to BAT.

TIMER (Pin 8): Charge Timer Input. A resistor connected between TIMER and GND programs charge cycle timing limits. Refer to the Applications Information section for complete details. Operating voltage range is GND to 1V.

SENSE (Pin 9): Charge Current Sense Input. An external resistor between this input and BAT is used to program charge current. Refer to the Applications Information section for complete details on programming charge current. Operating voltage ranges from (BAT – 50mV) to (BAT + 200mV).

BAT (Pin 10): Battery Pack Connection. The LTC4010 uses the voltage on this pin to control current sourced from V_{CC} to the battery during charging. Allowable operating voltage range is GND to V_{CC}.

$INTV_{DD}$ (Pin 11): Internal 5V Regulator Output. This pin provides a means of bypassing the internal 5V regulator used to power the BGATE output driver. Typically, power should not be drawn from this pin by the application circuit. Refer to the Application Information section for additional details.

BGATE (Pin 12): External Synchronous N-channel MOSFET Gate Control Output. This output provides gate drive to an optional external NMOS power transistor switch used for synchronous rectification to increase efficiency in the step-down DC/DC converter. Operating voltage is GND to $INTV_{DD}$. BGATE should be left floating if not used.

PGND (Pin 13): Power Ground. This pin provides a return for switching currents generated by internal LTC4010 circuits. Externally, PGND and GND should be wired together using a very low impedance connection. Refer to PCB Layout Considerations in the Applications Information section for additional grounding details.

TGATE (Pin 14): External P-channel MOSFET Gate Control Output. This output provides gate drive to an external PMOS power transistor switch used in the DC/DC converter. Operating voltage range varies as a function of V_{CC}. Refer to the Electrical Characteristics table for specific voltages.

V_{CC} (Pin 15): Power Input. External diodes normally connect either the DC input power supply or the battery to this pin. Refer to the Applications Information section for further details. Suggested applied voltage range is GND to 34V.

$\overline{READY}$ (Pin 16): Active-Low Ready-to-Charge Output. The LTC4010 connects this pin to GND if proper operating voltages for charging are present. Refer to the Operation section for complete details on charge qualification. This output is capable of driving an LED and should be left floating if not used. $\overline{READY}$ is an open-drain output to GND with an operating voltage range of GND to V_{CC}.

Exposed Pad (Pin 17): This pin provides enhanced thermal properties for the TSSOP. It must be soldered to the PCB copper ground to obtain optimum thermal performance.

BLOCK DIAGRAM

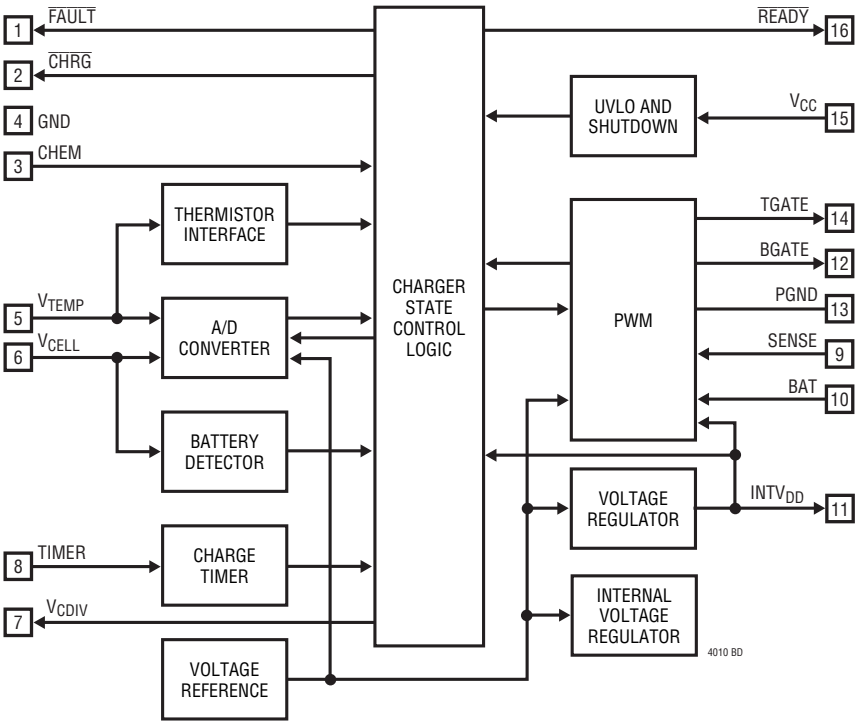

OPERATION (Refer to Figure 1)

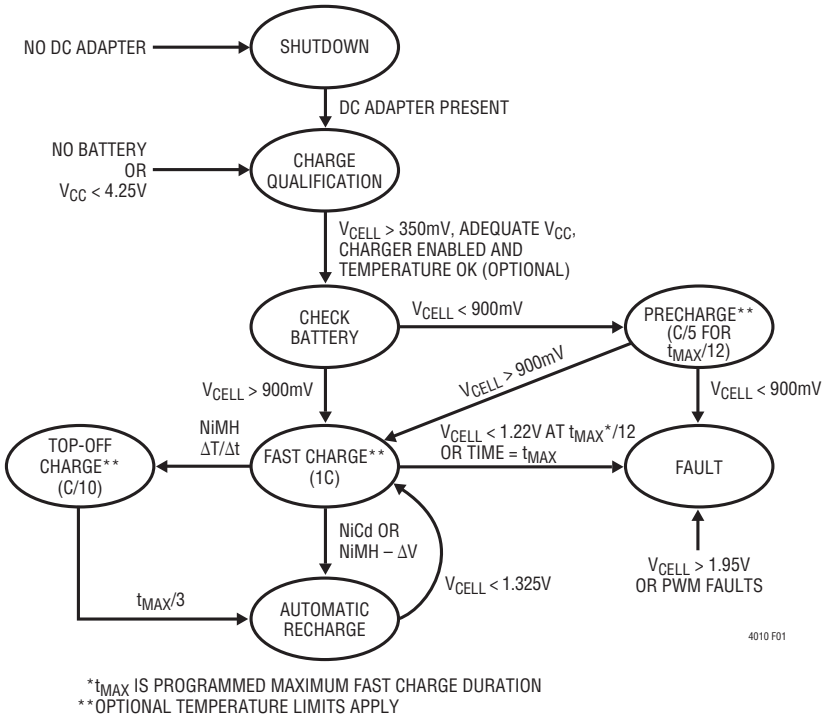

Figure 1. LTC4010 State Diagram

OPERATION (Refer to Figure 1)

Shutdown State

The LTC4010 remains in micropower shutdown until V_{CC} (Pin 15) is driven above BAT (Pin 10). In shutdown all status and PWM outputs and internally generated supply voltages are inactive. Current consumption from V_{CC} and BAT is reduced to a very low level.

Charge Qualification State

Once V_{CC} is greater than BAT, the LTC4010 exits micropower shutdown, enables its own internal supplies and switches V_{CDIV} to GND to allow measurement of the average single-cell voltage. The IC also verifies that V_{CC} is at or above 4.2V, V_{CC} is 510mV above BAT and V_{CELL} is between 350mV and 1.95V. If V_{CELL} is below 350mV, no charging will occur, and if V_{CELL} is above 1.95V, the fault state is entered, which is described in more detail below. Once adequate voltage conditions exist for charging, $\overline{READY}$ is asserted.

If the voltage between V_{TEMP} and GND is below 200mV, the LTC4010 is paused. If V_{TEMP} is above 200mV but below 2.85V, the LTC4010 verifies that the sensed temperature is between 5°C and 45°C. If these temperature limits are not met or if its own die temperature is too high, the LTC4010 will indicate a fault and not allow charging to begin. If V_{TEMP} is greater than 2.85V, battery temperature related charge qualification, monitoring and termination are disabled.

Once charging is fully qualified, precharge begins (unless the LTC4010 is paused). In that case, the V_{TEMP} pin is monitored for further control. The charge status indicators and PWM outputs remain inactive until charging begins.

Charge Monitoring

The LTC4010 continues to monitor important voltage and temperature parameters during all charging states. If V_{CC} drops to the BAT voltage or lower, charging stops and the shutdown state is entered. If V_{CC} drops below 4.25V or V_{CELL} drops below 350mV, charging stops and the LTC4010 returns to the charge qualification state. If V_{CELL} exceeds 1.95V, charging stops and the IC enters the fault state. If an external thermistor indicates sensed temperature is beyond a range of 5°C to 60°C, or the internal die temperature exceeds a resonable value, charging is suspended, the charge timer is paused and the LTC4010 indicates a fault condition. Normal charging resumes from the previous state when the sensed temperature returns to a satisfactory range. In addition, other battery faults are detected during specific charging states as described below.

Precharge State

If the initial voltage on V_{CELL} is below 900mV, the LTC4010 enters the precharge state and enables the PWM current source to trickle charge using one-fifth the programmed charge current. The $\overline{CHRG}$ status output is active during precharge. The precharge state duration is limited to $t_{MAX}/12$ minutes, where t_{MAX} is the maximum fast charge period programmed with the TIMER pin. If sufficient V_{CELL} voltage cannot be developed in this length of time, the fault state is entered, otherwise fast charge begins.

Fast Charge State

If adequate average single-cell voltage exists, the LTC4010 enters the fast charge state and begins charging at the programmed current set by the external current sense resistor connected between the SENSE and BAT pins. The $\overline{CHRG}$ status output is active during fast charge. If V_{CELL} is initially above 1.325V, voltage-based termination processing begins immediately. Otherwise $-\Delta V$ termination is disabled for a stabilization period of $t_{MAX}/12$. In that case, the LTC4010 makes another fault check at $t_{MAX}/12$, requiring the average cell voltage to be above 1.22V. This ensures the battery pack is accepting a fast charge. If V_{CELL} is not above this voltage threshold, the fault state is entered. Fast charge state duration is limited to t_{MAX} and the fault state is entered if this limit is exceeded.

OPERATION (Refer to Figure 1)

Charge Termination

Fast charge termination parameters are dependent upon the battery chemistry selected with the CHEM pin. Voltage-based termination (–ΔV) is always active after the initial voltage stabilization period. If an external thermistor network is present, chemistry-specific limits for ΔT/Δt (rate of temperature rise) are also used in the termination algorithm. Temperature-based termination, if enabled, becomes active as soon as the fast charge state is entered.

Successful charge termination requires a charge rate between C/2 and 2C. Lower rates may not produce the battery voltage and temperature profile required for charge termination.

Top-Off Charge State

If NiMH fast charge termination occurs because the ΔT/Δt limit is exceeded after an initial period of $t_{MAX}/12$ has expired, the LTC4010 enters the top-off charge state. Top-off charge is implemented by sourcing one-tenth the programmed charge current for $t_{MAX}/3$ minutes to ensure that 100% charge has been delivered to the battery. The $\overline{CHRG}$ status output is active during the top-off state. If NiCd cells have been selected with the CHEM pin, the LTC4010 never enters the top-off state.

Automatic Recharge State

Once charging is complete, the automatic recharge state is entered to address the self-discharge characteristics of nickel chemistry cells. The charge status output is inactive during automatic recharge, but V_{CDIV} remains switched to GND to monitor the average cell voltage. If the V_{CELL} voltage drops below 1.325V without falling below 350mV, the charge timer is reset and a new fast charge cycle is initiated.

The internal termination algorithms of the LTC4010 are adjusted when a fast charge cycle is initiated from automatic recharge, because the battery should be almost fully charged. Voltage-based termination is enabled immediately and the NiMH ΔT/Δt limit is fixed at a battery temperature rise of 1°C/minute.

Fault State

As discussed previously, the LTC4010 enters the fault state based on detection of invalid battery voltages during various charging phases. The IC also monitors the regulation of the PWM control loop and will enter the fault state if this is not within acceptable limits. Once in the fault state, the battery must be removed or DC input power must be cycled in order to initiate further charging. In the fault state, the $\overline{FAULT}$ output is active, the $\overline{READY}$ output is inactive, charging stops and the charge indicator output is inactive. The V_{CDIV} output remains connected to GND to allow detection of battery removal.

Note that the LTC4010 also uses the $\overline{FAULT}$ output to indicate that charging is suspended due to invalid battery or internal die temperatures. However, the IC does not enter the fault state in these cases and normal operation will resume when all temperatures return to acceptable levels. Refer to the Status Outputs section for more detail.

Insertion and Removal of Batteries

The LTC4010 automatically senses the insertion or removal of a battery by monitoring the V_{CELL} pin voltage. Should this voltage fall below 350mV, the IC considers the battery to be absent. Removing and then inserting a battery causes the LTC4010 to initiate a completely new charge cycle beginning with charge qualification.

External Pause Control

After charging is initiated, the V_{TEMP} pin may be used to pause operation at any time. When the voltage between V_{TEMP} and GND drops below 200mV, the charge timer pauses, fast charge termination algorithms are inhibited and the PWM outputs are disabled. The status and V_{CDIV} outputs all remain active. Normal function is fully restored from the previous state when pause ends.

OPERATION (Refer to Figure 1)

Status Outputs

The LTC4010 open-drain status outputs provide valuable information about the IC's operating state and can be used for a variety of purposes in applications. Table 1 summarizes the state of the three status outputs and the V_{CDIV} pin as a function of LTC4010 operation. The status outputs can directly drive current-limited LEDs terminated to the DC input. The V_{CDIV} column in Table 1 is strictly informational. V_{CDIV} should only be used to terminate the V_{CELL} resistor divider, as previously discussed.

Table 1. LTC4010 Status Pins

$\overline{READY}$	$\overline{FAULT}$	$\overline{CHRG}$	V_{CDIV}	CHARGER STATE
Off	Off	Off	Off	Off
On	Off	Off	On	Ready to Charge (V_{TEMP} Held Low) or Automatic Recharge
On	Off	On	On	Precharge, Fast or Top Off Charge (May be Paused)
On	On	On or Off	On	Temperature Limits Exceeded
Off	On	Off	On	Fault State (Latched)

PWM Current Source Controller

An integral part of the LTC4010 is the PWM current source controller. The charger uses a synchronous step-down architecture to produce high efficiency and limited thermal dissipation. The nominal operating frequency of 550kHz allows use of a smaller external inductor. The TGATE and BGATE outputs have internally clamped voltage swings. They source peak currents tailored to smaller surface-mount power FETs likely to appear in applications providing an average charge current of 3A or less. During the various charging states, the LTC4010 uses the PWM controller to regulate an average voltage between SENSE and BAT that ranges from 10mV to 100mV.

A conceptual diagram of the LTC4010 PWM control loop is shown in Figure 2.

The voltage across the external current programming resistor R_{SENSE} is averaged by integrating error amplifier EA. An internal programming current is also pulled from input resistor R1. The I_{PROG} • R1 product establishes the desired average voltage drop across R_{SENSE}, and hence,

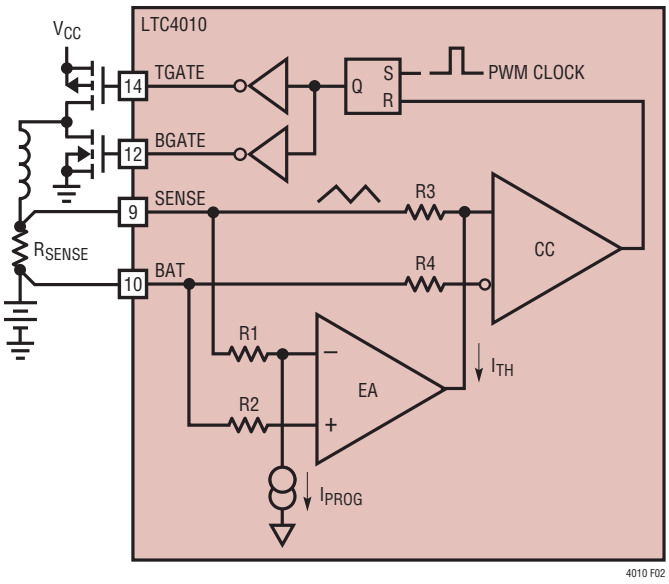

Figure 2. LTC4010 PWM Control Loop

OPERATION (Refer to Figure 1)

the average current through R_{SENSE}. The I_{TH} output of the error amplifier is a scaled control current for the input of the PWM comparator CC. The I_{TH} • R3 product sets a peak current threshold for CC such that the desired average current through R_{SENSE} is maintained. The current comparator output does this by switching the state of the SR latch at the appropriate time.

At the beginning of each oscillator cycle, the PWM clock sets the SR latch and the external P-channel MOSFET is switched on (N-channel MOSFET switched off) to refresh the current carried by the external inductor. The inductor current and voltage drop across R_{SENSE} begin to rise linearly. During normal operation, the PFET is turned off (NFET on) during the cycle by CC when the voltage difference across R_{SENSE} reaches the peak value set by the output of EA. The inductor current then ramps down linearly until the next rising PWM clock edge. This closes the loop and maintains the desired average charge current in the external inductor.

Low Dropout Charging

After charging is initiated, the LTC4010 does not require that V_{CC} remain at least 500mV above BAT because situations exist where low dropout charging might occur. In one instance, parasitic series resistance may limit PWM headroom (between V_{CC} and BAT) as 100% charge is reached. A second case can arise when the DC adapter selected by the end user is not capable of delivering the current programmed by R_{SENSE}, causing the output voltage of the adapter to collapse. While in low dropout, the LTC4010 PWM runs near 100% duty cycle with a frequency that may not be constant and can be less than 550kHz. The charge current will drop below the programmed value to avoid generating audible noise, so the actual charge delivered to the battery may depend primarily on the LTC4010 charge timer.

Internal Die Temperature

The LTC4010 provides internal overtemperature detection to protect against electrical overstress, primarily at the FET driver outputs. If the die temperature rises above this thermal limit, the LTC4010 stops switching and indicates a fault as previously discussed.

APPLICATIONS INFORMATION

External DC Source

The external DC power source should be connected to the charging system and the V_{CC} pin through a power diode acting as an input rectifier. This prevents catastrophic system damage in the event of an input short to ground or reverse-voltage polarity at the DC input. The LTC4010 automatically senses when this input drives the V_{CC} pin above BAT. The open-circuit voltage of the DC source should be between 5.5V and 34V, depending on the number of cells being charged. In order to avoid low dropout operation, ensure 100% capacity at charge termination, and allow reliable detection of battery insertion, removal or overvoltage, the following equation can be used to determine the minimum full-load voltage that should be produced at V_{CC} when the external DC power source is connected.

$$V_{CC(MIN)} = (n \bullet 2V) + 0.3V$$

where n is the number of series cells in the battery pack.

The LTC4010 will properly charge over a wide range of V_{CC} and BAT voltage combinations. Operating the LTC4010 in low dropout or with V_{CC} much greater than BAT will force the PWM frequency to be much less than 550kHz. The LTC4010 disables charging and sets a fault if a large V_{CC} to BAT differential would cause generation of audible noise.

Load Control

Proper load current control is an important consideration when fast charging nickel cells. This control ensures that the system load remains powered at all times, but that normal system operation and associated load transients do not adversely affect fast charge termination. The input protecton detailed in the previous paragraph is an integral part of the necessary load control.

The battery should also be connected to the raw system supply by some rectifying means, thus forming a switch that selects the battery for system power only if an external DC source is not present.

Battery Chemistry Selection

The desired battery chemistry is selected by programming the CHEM pin to the proper voltage. If it is wired to GND, a set of parameters specific to charging NiMH cells is selected. When CHEM is left floating, charging is optimized for NiCd cells. The various charging parameters are detailed in Table 2.

Programming Charge Current

Charge current is programmed using the following equation:

$$R_{SENSE} = \frac{100mV}{I_{PROG}}$$

R_{SENSE} is an external resistor connected between the SENSE and BAT pins. A 1% resistor with a low temperature coefficient and sufficient power dissipation capability to avoid self-heating effects is recommended. Charge rate should be between approximately C/2 and 2C.

Inductor Value Selection

For many applications, 10µH represents an optimum value for the inductor the PWM uses to generate charge current. For applications with I_{PROG} of 1.5A or greater running from an external DC source of 15V or less, values between 5µH and 7.5µH can often be selected. For wider operating conditions the following equation can be used as a guide for selecting the minimum inductor value.

$$L > 6.5 \bullet 10^{-6} \bullet V_{DCIN} \bullet R_{SENSE},\ L \geq 4.7\mu H$$

Actual part selection should account for both manufacturing tolerance and temperature coefficient to ensure this minimum. A good initial selection can be made by multiplying the calculated minimum by 1.4 and rounding up or down to the nearest standard inductance value.

Ultimately, there is no substitute for bench evaluation of the selected inductor in the target application, which can also be affected by other environmental factors such as ambient operating temperature. Using inductor values lower than recommended by the equation shown above can result in a fault condition at the start of precharge or top-off charge.

Programming Maximum Charge Times

Connecting the appropriate resistor between the TIMER pin and GND programs the maximum duration of various

APPLICATIONS INFORMATION

Table 2. LTC4010 Charging Parameters

STATE	CHEM PIN	BAT CHEMISTRY	TIMER	T_{MIN}	T_{MAX}	I_{CHRG}	TERMINATION CONDITION
PC		Both	$t_{MAX}/12$	5°C	45°C	$I_{PROG}/5$	Timer Expires
FC	Open	NiCd	t_{MAX}	5°C	60°C	I_{PROG}	–20mV per Cell or 2°C/Minute
	GND	NiMH	t_{MAX}	5°C	60°C	I_{PROG}	1.5°C/Minute for First $t_{MAX}/12$ Minutes if Initial $V_{CELL} < 1.325V$
							–10mV per Cell or 1°C/Minute After $t_{MAX}/12$ Minutes or if Initial $V_{CELL} > 1.325V$
TOC	GND	NiMH	$t_{MAX}/3$	5°C	60°C	$I_{PROG}/10$	Timer Expires
AR		Both		5°C	45°C	0	$V_{CELL} < 1.325V$

PC: Precharge
FC: Fast Charge (Initial –ΔV Termination Hold Off of $t_{MAX}/12$ Minutes May Apply)
TOC: Top-Off Charge (Only for NiMH ΔT/Δt FC Termination After Initial $t_{MAX}/12$ Period)
AR: Automatic Recharge (Temperature Limits Apply to State Termination Only)

Table 3. LTC4010 Time Limit Programming Examples

R_{TIMER}	TYPICAL FAST CHARGE RATE	PRECHARGE LIMIT (MINUTES)	FAST CHARGE VOLTAGE STABILIZATION (MINUTES)	FAST CHARGE LIMIT (HOURS)	TOP-OFF CHARGE (MINUTES)
24.9k	2C	3.8	3.8	0.75	15
33.2k	1.5C	5	5	1	20
49.9k	1C	7.5	7.5	1.5	30
66.5k	0.75C	10	10	2	40
100k	C/2	15	15	3	60

charging states. To some degree, the value should reflect how closely the programmed charge current matches the 1C rate of targeted battery packs. The maximum fast charge period is determined by the following equation:

$$R_{TIMER} = \frac{t_{MAX}\,(Hours)}{30 \bullet 10^{-6}}\,(\Omega)$$

Some typical timing values are detailed in Table 3. R_{TIMER} should not be less than 15k. The actual time limits used by the LTC4010 have a resolution of approximately ±30 seconds in addition to the tolerances given the Electrical Characteristics table. If the timer ends without a valid –ΔV or ΔT/Δt charge termination, the charger enters the fault state. The maximum time period is approximately 4.3 hours.

Cell Voltage Network Design

An external resistor network is required to provide the average single-cell voltage to the V_{CELL} pin of the LTC4010. The proper circuit for multicell packs is shown in Figure 3. The ratio of R2 to R1 should be a factor of (n – 1), where n is the number of series cells in the battery pack. The value of R1 should be between 1k and 100k. This range limits the sensing error caused by V_{CELL} leakage current and prevents the ON resistance of the internal NFET between V_{CDIV} and GND from causing a significant error in the V_{CELL} voltage. The external resistor network is also used to detect battery insertion and removal. The filter

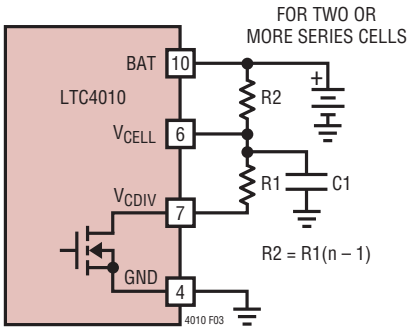

Figure 3. Multiple Cell Voltage Divider

APPLICATIONS INFORMATION

formed by C1 and the parallel combination of R1 and R2 is recommended for rejecting PWM switching noise. The value of C1 should be chosen to yield a 1st order lowpass frequency of less than 500Hz. In the case of a single cell, the external application circuit shown in Figure 4 is recommended to provide the necessary noise filtering and missing battery detection.

External Thermistor

The network for proper temperature sensing using a thermistor with a negative temperature coefficient (NTC) is shown in Figure 5. The LTC4010 is designed to work best with a 1% 10k NTC thermistor with a β of 3750. However, the LTC4010 will operate satisfactorily with other 10k NTC thermistors having slightly different nominal exponential temperature coefficients. For these thermistors, the temperature related limits given in the Electrical Characteristics table may not strictly apply. The filter formed by C1 in Figure 5 is optional but recommended for rejecting PWM switching noise.

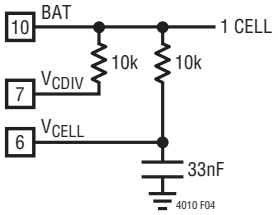

Figure 4. Single-Cell Monitor Network

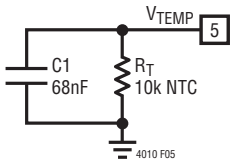

Figure 5. External NTC Thermistor Network

Disabling Thermistor Functions

Temperature sensing is optional in LTC4010 applications. For low cost systems where temperature sensing may not be required, the V_{TEMP} pin may simply be wired to GND through 10k to disable temperature qualification of all charging operations. However, this practice is not recommended for NiMH cells charged well above or below their 1C rate, because fast charge termination based solely on voltage inflection may not be adequate to protect the battery from a severe overcharge.

$INTV_{DD}$ Regulator Output

If BGATE is left open, the $INTV_{DD}$ pin of the LTC4010 can be used as an additional source of regulated voltage in the host system any time $\overline{READY}$ is active. Switching loads on $INTV_{DD}$ may reduce the accuracy of internal analog circuits used to monitor and terminate fast charging. In addition, DC current drawn from the $INTV_{DD}$ pin can greatly increase internal power dissipation at elevated V_{CC} voltages. A minimum ceramic bypass capacitor of 0.1µF is recommended.

Calculating Average Power Dissipation

The user should ensure that the maximum rated IC junction temperature is not exceeded under all operating conditions. The thermal resistance of the LTC4010 package (θ_{JA}) is 38°C/W, provided the exposed metal pad is properly soldered to the PCB. The actual thermal resistance in the application will depend on the amount of PCB copper to which the package is soldered. Feedthrough vias directly below the package that connect to inner copper layers are helpful in lowering thermal resistance. The following formula may be used to estimate the maximum average power dissipation P_D (in watts) of the LTC4010 under normal operating conditions.

$$P_D = V_{CC}\left(9mA + I_{DD} + 615k\left(Q_{TGATE} + Q_{BGATE}\right)\right) - 3.85I_{DD} + 60n\left(\frac{V_{CC} - V_{LED}}{R_{LED} + 30}\right)^2$$

where:

I_{DD} = Average external $INTV_{DD}$ load current, if any

Q_{TGATE} = Gate charge of external P-channel MOSFET in coulombs

Q_{BGATE} = Gate charge of external N-channel MOSFET (if used) in coulombs

V_{LED} = Maximum external LED forward voltage

R_{LED} = External LED current-limiting resistor used in the application

n = Number of LEDs driven by the LTC4010

APPLICATIONS INFORMATION

Sample Applications

Figures 6 through 8 detail sample charger applications of various complexities. Combined with the Typical Application on the first page of this data sheet, these figures demonstrate some of the proper configurations of the LTC4010. MOSFET body diodes are shown in these figures strictly for reference only.

Figure 6 shows a minimum application, which might be encountered in low cost NiCd fast charge applications. The LTC4010 uses –ΔV to terminate the fast charge state, as no external temperature information is available. Nonsynchronous PWM switching is employed to reduce external component cost. A single LED indicates charging status.

A full-featured 2A LTC4010 application is shown in Figure 7. The inherent voltage ratings of the V_{CELL}, V_{CDIV}, SENSE and BAT pins allow charging of one to sixteen series nickel cells in this application, governed only by the V_{CC} overhead limits previously discussed. The application includes all average cell voltage and battery temperature sensing circuitry required for the LTC4010 to utilize its full range of charge qualification, safety monitoring and fast charge termination features. The V_{TEMP} thermister network allows the LTC4010 to accurately terminate fast charge under a variety of applied charge rates. Use of a synchronous PWM topology improves efficiency and reduces excess heat generation. LED D1 indicates valid DC input voltage and installed battery, while LED D2 indicates charging. Fault conditions are indicated by LED D3. The grounded CHEM pin selects the NiMH charge termination parameter set.

P-channel MOSFET Q1 functions as a switch to connect the battery to the system load whenever the DC input adapter is removed. If the maximum battery voltage is less than the maximum rated V_{GS} of Q1, diode D4 and resistor R1 are not required. Otherwise choose the Zener voltage of D4 to be less than the maximum rated V_{GS} of Q1. R1 provides a bias current of $(V_{BAT} – V_{ZENER})/(R1 + 20k)$ for D4 when the input adapter is removed. Choose R1 to make this current, which is drawn from the battery, just large enough to develop the desired V_{GS} across D4.

While the LTC4010 is a complete, standalone solution, Figure 8 shows that it can also be interfaced to a host microprocessor. The host MCU can control the charger directly with an open-drain I/O port connected to the V_{TEMP} pin, if that port is low leakage and can tolerate at least 2V. The charger state is monitored on the three LTC4010 status outputs. Charging of NiMH batteries is selected in this example. However, NiCd parameters could be chosen as well.

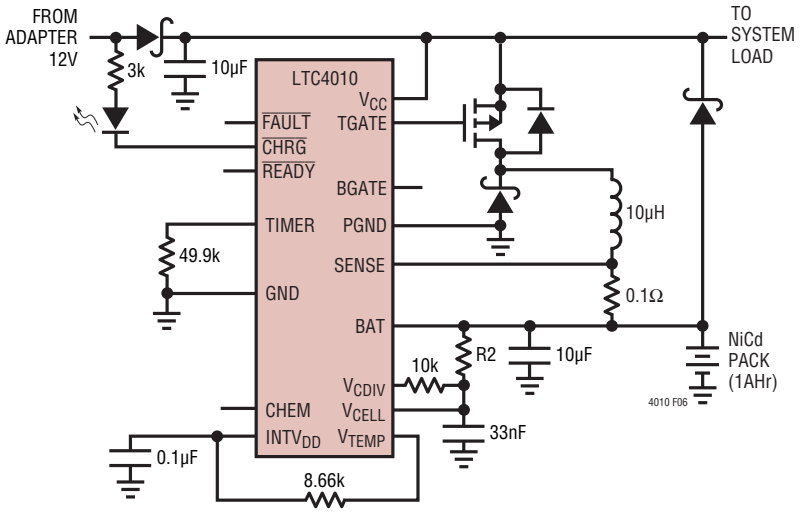

Figure 6. Minimum 1 Amp LTC4010 Application

APPLICATIONS INFORMATION

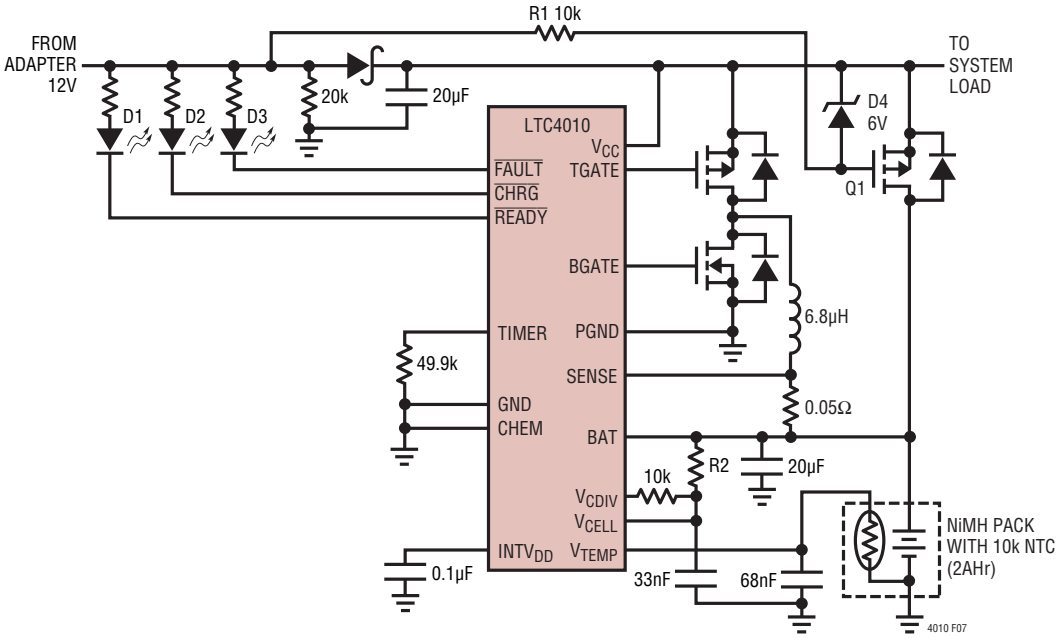

Figure 7. Full-Featured 2 Amp LTC4010 Application

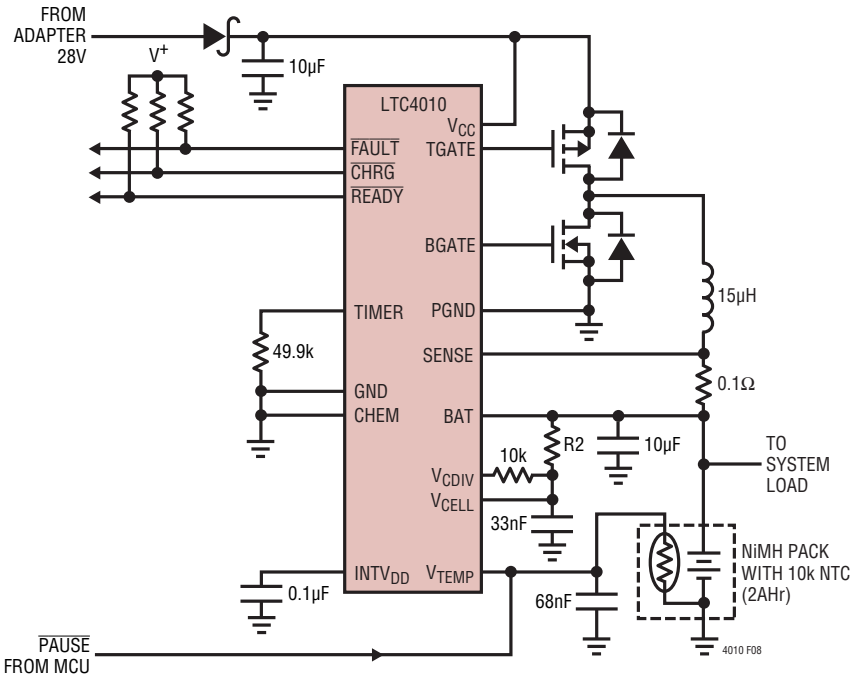

Figure 8. LTC4010 with MCU Interface

APPLICATIONS INFORMATION

Unlike all of the other applications discussed so far, the battery continues to power the system during charging. The MCU could be powered directly from the battery or from any type of post regulator operating from the battery. In this configuration, the LTC4010 relies expressly on the ability of the host MCU to know when load transients will be encountered. The MCU should then pause charging (and thus –ΔV processing) during those events to avoid premature fast charge termination. If the MPU cannot reliably perform this function, the battery *should* be disconnected from the load with a rectifier or switch when charging. In most applications, there should not be an external load on the battery during charge. Excessive battery load current variations, such as those generated by a post-regulating PWM, can generate sufficient voltage noise to cause the LTC4010 to prematurely terminate a charge cycle and/or prematurely restart a fast charge. In this case, it may be necessary to inhibit the LTC4010 after charging is complete until external gas gauge circuitry indicates that recharging is necessary. Shutdown power is applied to the LTC4010 through the body diode of the P-channel MOSFET in this application.

Waveforms

Sample waveforms for a standalone application during a typical charge cycle are shown in Figure 9. Note that these waveforms are not to scale and do not represent the complete range of possible activity. The figure is simply intended to allow better conceptual understanding and to highlight the relative behavior of certain signals generated by the LTC4010 during a typical charge cycle.

Initially, the LTC4010 is in low power shutdown as the system operates from a heavily discharged battery. A DC adapter is then connected such that V_{CC} rises above 4.25V and is 500mV above BAT. The $\overline{READY}$ output is asserted when the LTC4010 completes charge qualification.

When the LTC4010 determines charging should begin, it starts a precharge cycle because V_{CELL} is less than 900mV. As long as the temperature remains within prescribed limits, the LTC4010 charges (TGATE switching), applying limited current to the battery with the PWM in order to bring the average cell voltage to 900mV.

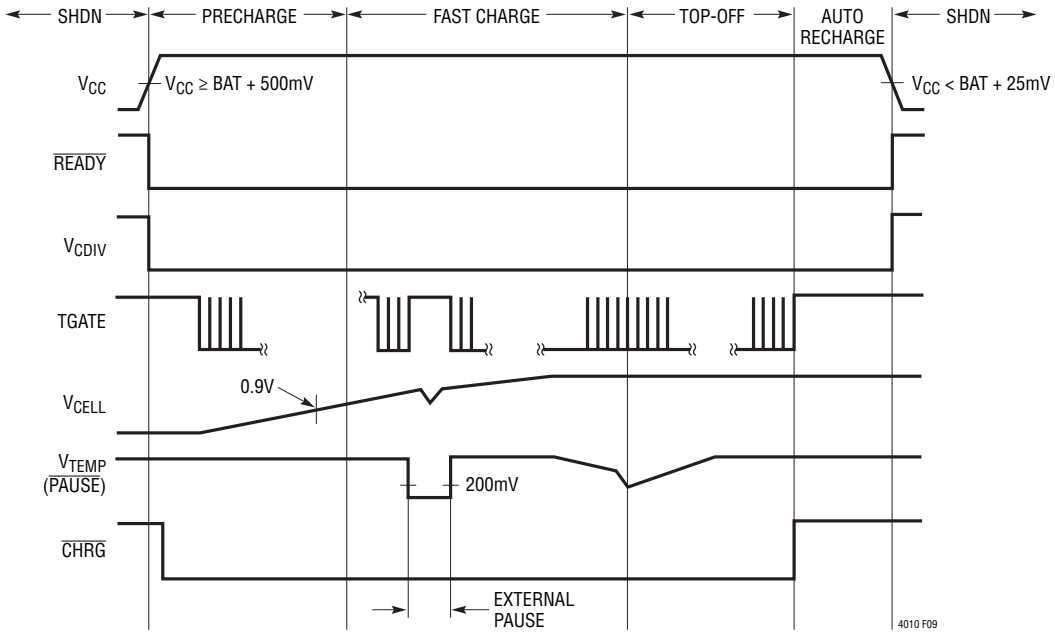

Figure 9. Charging Waveforms Example

APPLICATIONS INFORMATION

When the precharge state timer expires, the LTC4010 begins fast charge if V_{CELL} is greater than 900mV. The PWM, charge timer and internal termination control are suspended if pause is asserted (V_{TEMP} < 200mV), but all status outputs continue to indicate charging is in progress. The fast charge state continues until the selected voltage or temperature termination criteria are met. Figure 9 suggests termination based on ΔT/Δt, which for NiMH would be an increase greater than 1°C per minute.

Because NiMH charging terminated due to ΔT/Δt and the fast charge cycle had lasted more than t_{MAX}/12 minutes, the LTC4010 begins a top-off charge with a current of I_{PROG}/10. Top-off is an internally timed charge of t_{MAX}/3 minutes with the $\overline{CHRG}$ output continuously asserted.

Finally, the LTC4010 enters the automatic recharge state where the $\overline{CHRG}$ output is deasserted. The PWM is disabled but V_{CDIV} remains asserted to monitor V_{CELL}. The charge timer will be reset and fast charging will resume if V_{CELL} drops below 1.325V. The LTC4010 enters shutdown when the DC adapter is removed, minimizing current draw from the battery in the absence of an input power source.

While not a part of the sample waveforms of Figure 9, temperature qualification is an ongoing part of the charging process, if an external thermistor network is detected by the LTC4010. Should prescribed temperature limits be exceeded during any particular charging state, charging would be suspended until the sensed temperature returned to an acceptable range.

Battery-Controlled Charging

Because of the programming arrangement of the LTC4010, it may be possible to configure it for battery-controlled charging. In this case, the battery pack is designed to provide customized information to an LTC4010-based charger, allowing a single design to service a wide range of application batteries. Assume the charger is designed to provide a maximum charge current of 800mA (R_{SENSE} = 125mΩ). Figure 10 shows a 4-cell NiCd battery pack for which 800mA represents a 0.75C rate. When connected to the charger, this pack would provide battery temperature information and correctly configure both fast charge termination parameters and time limits for the internal NiCd cells.

A second possibility is to configure an LTC4010-based charger to accept battery packs with varying numbers of cells. By including R2 of the average cell voltage divider network shown in Figure 3, battery-based programming of the number of series-stacked cells could be realized without defeating LTC4010 detection of battery insertion or removal. Figure 11 shows a 2-cell NiMH battery pack that programs the correct number of series cells when it is connected to the charger, along with indicating chemistry and providing temperature information.

Any of these battery pack charge control concepts could be combined in a variety of ways to service custom application needs. Charging parallel cells is not recommended.

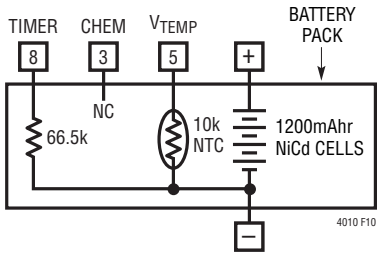

Figure 10. NiCd Battery Pack with Time Limit Control

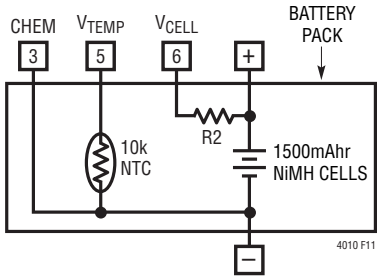

Figure 11. NiMH Battery Pack Indicating Number of Cells

PCB Layout Considerations

To prevent magnetic and electrical field radiation and high frequency resonant problems, proper layout of the components connected to the LTC4010 is essential. Refer to Figure 12. For maximum efficiency, the switch node rise and fall times should be minimized. The following PCB design priority list will help ensure proper topology. Layout the PCB using this specific order.

APPLICATIONS INFORMATION

1. Input capacitors should be placed as close as possible to switching FET supply and ground connections with the shortest copper traces possible. The switching FETs must be on the same layer of copper as the input capacitors. Vias should not be used to make these connections.
2. Place the LTC4010 close to the switching FET gate terminals, keeping the connecting traces short to produce clean drive signals. This rule also applies to IC supply and ground pins that connect to the switching FET source pins. The IC can be placed on the opposite side of the PCB from the switching FETs.
3. Place the inductor input as close as possible to the drain of the switching FETs. Minimize the surface area of the switch node. Make the trace width the minimum needed to support the programmed charge current. Use no copper fills or pours. Avoid running the connection on multiple copper layers in parallel. Minimize capacitance from the switch node to any other trace or plane.
4. Place the charge current sense resistor immediately adjacent to the inductor output, and orient it such that current sense traces to the LTC4010 are not long. These feedback traces need to be run together as a single pair with the smallest spacing possible on any given layer on which they are routed. Locate any filter component on these traces next to the LTC4010, and not at the sense resistor location.
5. Place output capacitors next to the sense resisitor output and ground.
6. Output capacitor ground connections must feed into the same copper that connects to the input capacitor ground before tying back into system ground.
7. Connection of switching ground to system ground, or any internal ground plane should be single-point. If the system has an internal system ground plane, a good way to do this is to cluster vias into a single star point to make the connection.
8. Route analog ground as a trace tied back to the LTC4010 GND pin before connecting to any other ground. Avoid using the system ground plane. A useful CAD technique is to make analog ground a separate ground net and use a 0Ω resistor to connect analog ground to system ground.
9. A good rule of thumb for via count in a given high current path is to use 0.5A per via. Be consistent when applying this rule.
10. If possible, place all the parts listed above on the same PCB layer.
11. Copper fills or pours are good for all power connections except as noted above in Rule 3. Copper planes on multiple layers can also be used in parallel. This helps with thermal management and lowers trace inductance, which further improves EMI performance.
12. For best current programming accuracy, provide a Kelvin connection from R_{SENSE} to SENSE and BAT. See Figure 13 for an example.
13. It is important to minimize parasitic capacitance on the TIMER, SENSE and BAT pins. The traces connecting these pins to their respective resistors should be as short as possible.

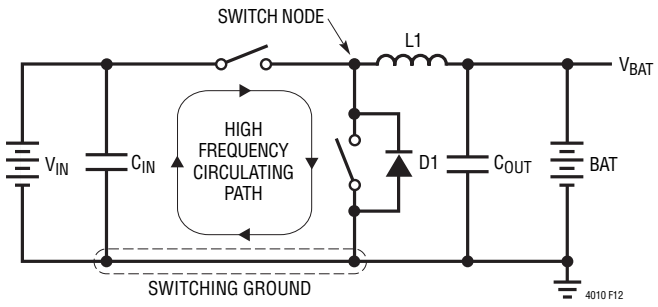

Figure 12. High Speed Switching Path

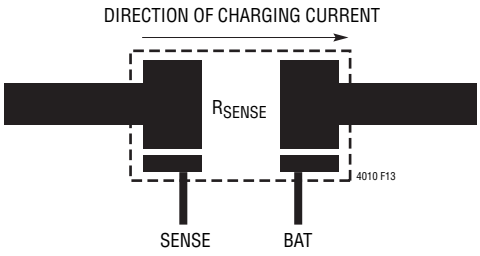

Figure 13. Kelvin Sensing of Charge Current

PACKAGE DESCRIPTION

FE Package
16-Lead Plastic TSSOP (4.4mm)
(Reference LTC DWG # 05-08-1663)
Exposed Pad Variation BC

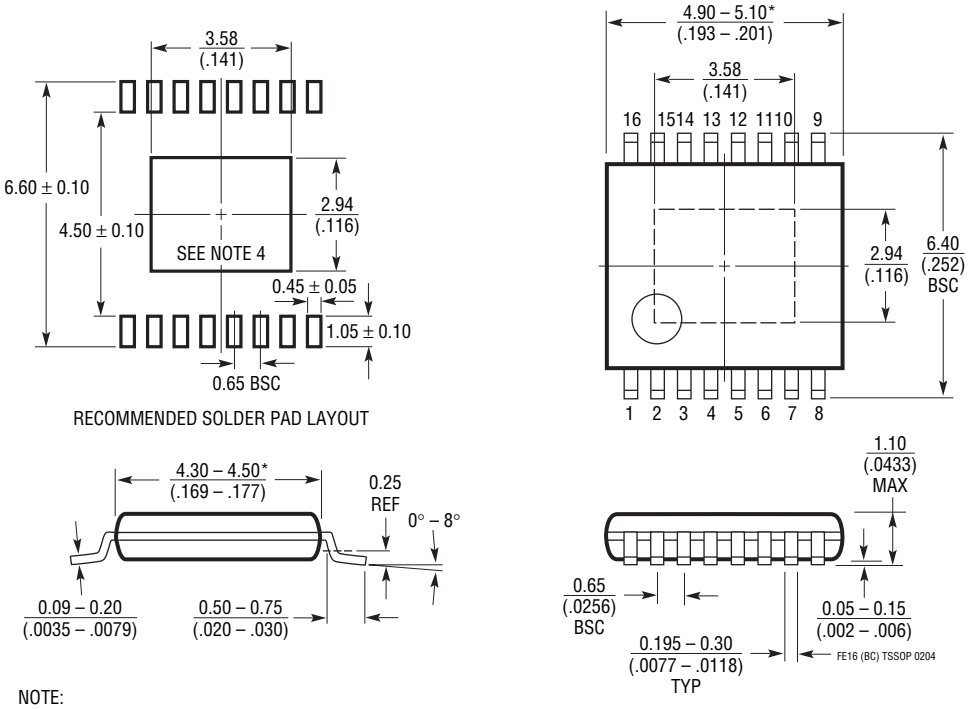

NOTE:
1. CONTROLLING DIMENSION: MILLIMETERS
2. DIMENSIONS ARE IN $\frac{\text{MILLIMETERS}}{(\text{INCHES})}$
3. DRAWING NOT TO SCALE
4. RECOMMENDED MINIMUM PCB METAL SIZE FOR EXPOSED PAD ATTACHMENT
*DIMENSIONS DO NOT INCLUDE MOLD FLASH. MOLD FLASH SHALL NOT EXCEED 0.150mm (.006") PER SIDE

REVISION HISTORY (Revision history begins at Rev B)

REV	DATE	DESCRIPTION	PAGE NUMBER
B	01/10	Changes to Typical Application	1
		Updated Order Information Section	2
		Changes to Electrical Characteristics	2, 3
		Changes to Pin Functions (V_{TEMP}, Pin 5)	8
		Changes to Operation Section	10, 11
		Changes to Applications Information	14, 15, 16, 17, 19, 20
		Changes to Figures 6, 7, 8	17, 18

Information furnished by Linear Technology Corporation is believed to be accurate and reliable. However, no responsibility is assumed for its use. Linear Technology Corporation makes no representation that the interconnection of its circuits as described herein will not infringe on existing patent rights.

RELATED PARTS

PART NUMBER	DESCRIPTION	COMMENTS
LT®1510	Constant-Voltage/Constant-Current Battery Charger	Up to 1.5A Charge Current for Li-Ion, NiCd and NiMH Batteries
LT1511	3A Constant-Voltage/Constant-Current Battery Charger	High Efficiency, Minimum External Components to Fast Charge Lithium, NiMH and NiCd Batteries
LT1513	SEPIC Constant- or Programmable-Current/Constant-Voltage Battery Charger	Charger Input Voltage May be Higher, Equal to or Lower than Battery Voltage, 500kHz Switching Frequency
LTC1760	Smart Battery System Manager	Autonomous Power Management and Battery Charging for Two Smart Batteries, SMBus Rev 1.1 Compliant
LTC1960	Dual Battery Charger/Selector with SPI	11-Bit V-DAC, 0.8% Voltage Accuracy, 10-Bit I-DAC, 5% Current Accuracy
LTC4008	High Efficiency, Programmable Voltage/Current Battery Charger	Constant-Current/Constant-Voltage Switching Regulator, Resistor Voltage/Current Programming, AC Adapter Current Limit and Thermistor Sensor and Indicator Outputs
LTC4011	High Efficiency Standalone Nickel Battery Charger	Complete NiMH/NiCd Charger in a 20-Pin TSSOP Package, PowerPath™ Control, Constant-Current Switching Regulator
LTC4060	Standalone Linear NiMH/NiCd Fast Charger	Complete NiMH/NiCd Charger in a Small Leaded or Leadless 16-Pin Package, No Sense Resistor or Blocking Diode Required
LTC4100	Smart Battery Charger Controller	Level 2 Charger Operates with or without MCU Host, SMBus Rev. 1.1 Compliant
LTC4150	Coulomb Counter/Battery Gas Gauge	High Side Sense of Charge Quantity and Polarity in a 10-Pin MSOP
LTC4412	Low Loss PowerPath Controller	Very Low Loss Replacement for Power Supply ORing Diodes Using Minimal External Components, $V_{IN(MAX)}$ = 28V
LTC4412HV	36V, Low Loss PowerPath Controller in ThinSOT	Very Low Loss Replacement for Power Supply ORing Diodes, $V_{IN(MAX)}$ = 36V
LTC4413	Dual, 2.6A Ideal Diode in 3mm × 3mm DFN	2.5V ≤ V_{IN} ≤ 5.5V, Ideal Diode ORing or Load Sharing, Low Reverse Leakage Current
LTC4414	36V, Low Loss PowerPath Controller for Large PFETs	Higher Gate Drive for Larger Q_G PFETs, $V_{IN(MAX)}$ = 36V, 8-Pin MSOP Package

PowerPath is a trademark of Linear Technology Corporation.

24 Linear Technology Corporation
1630 McCarthy Blvd., Milpitas, CA 95035-7417
(408) 432-1900 • FAX: (408) 434-0507 • www.linear.com

LT 0110 REV B • PRINTED IN USA

© LINEAR TECHNOLOGY CORPORATION 2005