Ultra-Low Power Battery Gas Gauge

FEATURES

- **Operating Supply Current <1.0µA**
- **Supply Voltage from 1.8V to 60V**
- **0V to 60V Sense Voltage for Low-Side or High-Side Sensing**
- **Fast 16-bit ADC Measures Voltage, Current and Temperature**
- **1% Voltage, Current and Charge Accuracy**
- **No Crystal or other Time Reference Required**
- Programmable Deadband Prevents Charge Drift
- Includes Battery Voltage Watchdog
- Includes Precision Temperature Sensor
- Programmable Alerts and Min/Max Tracking Registers
- Auxiliary ADC Input for Sensor Readout
- I²C/SMBus Interface
- Available in Small 10-Lead 3mm × 2mm DFN Package

APPLICATIONS

- Remote Sensors
- Energy Harvesting Systems
- Low-Power Handheld Products
- Power Tools

DESCRIPTION

The LTC®2959 is an ultra-low power battery gas gauge that accurately measures charge, voltage, current and temperature. Its wide input voltage range and its low operating current make the LTC2959 suitable for many applications, including duty-cycled systems that operate over long lifetime.

A precision coulomb counter integrates current through an external sense resistor connected at any point in the battery current path. A 16-bit ADC can be configured to measure voltage, current, temperature and/or an auxiliary input in single-shot, duty-cycled (1S/52s) or continuous mode (2.5kS/s). The measurements are stored in internal registers accessible via the onboard I²C/SMBus interface.

The LTC2959 features programmable high and low thresholds and min/max tracking registers. If a threshold is exceeded, the device sets a flag in the internal status register and communicates an alert using the SMBus alert protocol when configured as such.

All registered trademarks and trademarks are the property of their respective owners.

TYPICAL APPLICATION

48V High-Side Sensing Coulomb Counter

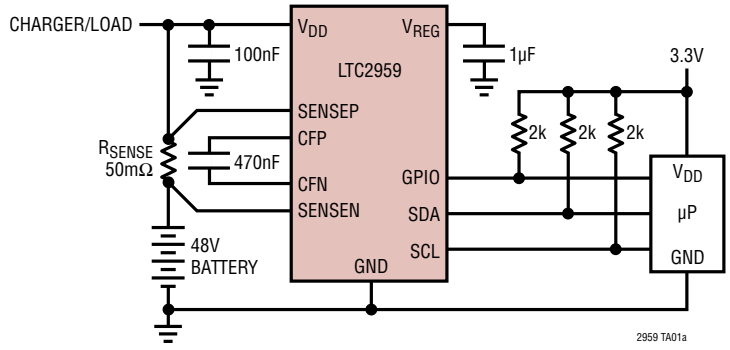

Operating Current vs Temperature

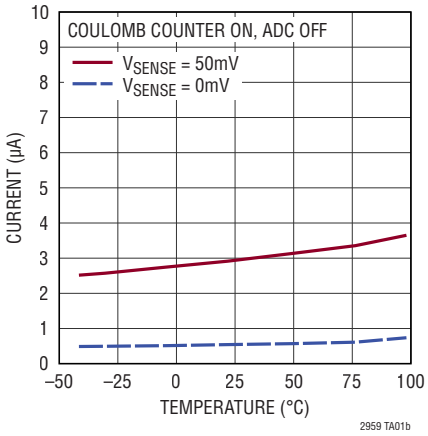

ABSOLUTE MAXIMUM RATINGS

(Note 1)

Supply Voltage (V_{DD} – GND) ..... –0.3 to 65V
CM Sensing Voltage (SENSEP, SENSEN) ..... –0.3 to 65V
DM Sensing Voltage |SENSEP – SENSEN| 0.3V
SCL, SDA, GPIO Voltage ..... –0.3 to 6V
Operating Ambient Temperature Range
LTC2959I ..... –40 to 85°C
Storage Temperature Range ..... –65 to 150°C

PIN CONFIGURATION

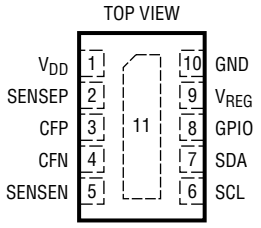

DDB PACKAGE
10-LEAD (3mm × 2mm) PLASTIC DFN
T_{JMAX} = 125°C θ_{JA} = 43°C/W

ORDER INFORMATION

LEAD FREE FINISH	TAPE AND REEL (MINI)	PART MARKING*	PACKAGE DESCRIPTION	TEMPERATURE RANGE
LTC2959IDDB#PBF	LTC2959IDDB#TRMPBF	LHGK	10-Lead (3mm × 2mm) Plastic DFN	–40°C to 85°C

TRM = 500 pieces. *Temperature grades are identified by a label on the shipping container.

Contact the factory for parts specified with wider operating temperature ranges.
Contact the factory for information on lead based finish parts.

Tape and reel specifications. Some packages are available in 500 unit reels through designated sales channels with #TRMPBF suffix.

ELECTRICAL CHARACTERISTICS

The ● denotes the specifications which apply over the full operating temperature range, otherwise specifications are at T_A = 25°C (Note 2).

SYMBOL	PARAMETER	CONDITIONS		MIN	TYP	MAX	UNITS
Power Requirements							
V_{DD}	Supply Voltage		●	1.8		60	V
I_{SUPPLY}	Supply Current (Note 3)	Coulomb Counter On, ADC Off, $\|V_{SENSE}\|$ < 1mV			0.8	2	µA
		Coulomb Counter On, ADC Off, $\|V_{SENSE}\|$ > 1mV	●		1	8	µA
		Coulomb Counter On, ADC On	●		400	800	µA
		Coulomb Counter Not Counting, ADC Off	●			2	µA
R_{SENSEN}	Resistance between SENSEN and GND	When Voltage ADC Measures SENSEN			400		kΩ
		Otherwise			1		GΩ
V_{UVLO}	Undervoltage Lockout Threshold	V_{DD} Falling	●	1.35	1.45	1.55	V
$t_{STARTUP}$	Startup Time	Fast Ramp Raises V_{DD} Above 1.8V			8		ms
Coulomb Counter							
V_{SENSE}	Sense Voltage Differential Input Range	$V_{SENSEP} – V_{SENSEN}$	●			±50	mV
TCE	Total Charge Error (Note 4)	10mV ≤ $\|V_{SENSE}\|$ ≤ 50mV Continuously	●		0.1	±1	%
		1mV ≤ $\|V_{SENSE}\|$ ≤ 10mV Continuously	●		0.2	±2	%
		10mV ≤ $\|V_{SENSE}\|$ ≤ 50mV Pulses with t_{PULSE} > 1ms			1		%
V_{OS}	Offset Voltage		●		±1	±10	µV
R_{IDR}	Differential Input Resistance Across SENSEP and SENSEN				800		kΩ
Q_{LSB}	Charge LSB (Note 5)	R_{SENSE} = 50mΩ			533		nAh
E_{DB}	Deadband Inaccuracy	Deadband = 20µV			±10		%

ELECTRICAL CHARACTERISTICS

The ● denotes the specifications which apply over the full operating temperature range, otherwise specifications are at T_A = 25°C (Note 2).

SYMBOL	PARAMETER	CONDITIONS		MIN	TYP	MAX	UNITS
Voltage Measurement ADC							
V_{FS}	Full-Scale Voltage Conversion				62.6		V
ΔV_{LSB}	Quantization Step Size	1 LSB at 16-Bit Resolution			0.955		mV
$GAIN_{VDD}$	Gain Error, V_{DD} Channel	1.8V ≤ V_{DD} ≤ 60V	●			±1.0	%
$GAIN_{SENSEN}$	Gain Error, SENSEN Channel	1.8V ≤ SENSEN ≤ 60V	●			±1.0	%
INL_V	Integral Nonlinearity		●		±2	±16	LSB
t_{CONVV}	Voltage Conversion Time				400		µs
Current Measurement ADC							
V_{FSI}	Full-Scale Current Conversion	SENSEP – SENSEN			±97.5		mV
ΔI_{LSB}	Quantization Step Size	1 LSB at 16-Bit Resolution			2.975		µV
$GAIN_I$	Current Gain Accuracy		●			±1.0	%
V_{OSI}	Offset	16-Bit LSBs	●		±1	±8	LSB
INL_I	Integral Nonlinearity	16-Bit LSBs	●		±2	±16	LSB
V_n	RMS Noise				3		LSB
t_{CONVI}	Current Conversion Time				400		µs
Temperature Measurement ADC							
T_{FS}	Full-Scale Temperature		●			825	K
ΔT_{LSB}	Quantization Step Size	1 LSB at 16-Bit Resolution			12.8		mK
TUE_T	Temperature Total Unadjusted Error		●		±0.5	±5	K
t_{CONVT}	Temperature Conversion Time	As Part of Round-Robin Cycle			1200		µs
GPIO Voltage Input ADC							
V_{FS}	Full-Scale GPIO Input Range	Small Input Range Large Input Range			±97.5 1.56		mV V
ΔV_{LSB}	Quantization Step Size	Small Input Range Large Input Range			2.975 47.6		µV µV
$GAIN_{GPIO}$	Gain Accuracy		●			±1.0	%
V_{OSGPIO}	Offset	Small Input Range Large Input Range			40 3		LSB LSB
INL_{GPIO}	Integral Nonlinearity	Small Input Range Large Input Range			±4 ±4	±32 ±32	LSB LSB
$t_{CONVGPIO}$	Conversion Time	As Part of Round-Robin Cycle			1600		µs
Digital Inputs and Digital Outputs							
V_{ITH}	Logic Input Threshold	V_{DD} ≥ 1.8V	●	0.5		1.4	V
V_{OL}	Low Level Output Voltage (GPIO, SDA)	I = 3mA, V_{DD} ≥ 1.8V	●			0.4	V
I_{IN}	Input Leakage (GPIO, SCL, SDA)	V_{IN} = 5.5V	●		0.001	1	µA
C_{IN}	Input Capacitance (GPIO, SCL, SDA)	(Note 8)	●			10	pF
t_{PCC}	Minimum Charge Complete (CC) Pulse Width					1	µs

ELECTRICAL CHARACTERISTICS

The ● denotes the specifications which apply over the full operating temperature range, otherwise specifications are at T_A = 25°C (Note 2).

SYMBOL	PARAMETER	CONDITIONS		MIN	TYP	MAX	UNITS
I²C Timing Characteristics							
$f_{SCL(MAX)}$	Maximum SCL Clock Frequency		●	400	900		kHz
$t_{BUF(MIN)}$	Bus Free Time Between STOP/START		●			1.3	µs
$t_{SU,STA(MIN)}$	Minimum Repeated START Set-Up Time		●			600	ns
$t_{HD,STA(MIN)}$	Minimum Hold Time (Repeated) START Condition		●			600	ns
$t_{SU,STO(MIN)}$	Minimum Set-Up Time for STOP Condition					600	ns
$t_{tSU,DAT(MIN)}$	Minimum Data Set-Up Time Input		●			100	ns
$t_{HD,DATI(MIN)}$	Minimum Data Hold Time Input		●			50	ns
$t_{HD,DATO}$	Data Hold Time Output		●	0.3		0.9	µs
t_{OF}	Data Output Fall Time	(Notes 7,8)	●	$20 + 0.1 \cdot C_B$		300	ns
Timeout	Max Time between Last SCL Clock Edge and SDA Release				51.2		ms

Note 1: Stresses beyond those listed under Absolute Maximum Ratings may cause permanent damage to the device. Exposure to any Absolute Maximum Rating condition for extended periods may affect device reliability and lifetime.

Note 2: All currents into pins are positive, all voltages are referenced to GND unless otherwise specified.

Note 3: Average current flowing into the V_{DD} pin. The coulomb counter supply current is a function of the voltage between its inputs. The ADC supply current depends on the channel that is being measured. During ADC conversions that measure the voltage on V_{SENSEN} (ADC voltage mode and register B[2] to '1'), current flows into SENSEN. Typically, during such conversions, $I_{SENSEN} = V_{SENSEN}/400k\Omega$.

Note 4: The coulomb counter measures static signals as well as dynamic inputs (current pulses). It may take several short pulses to increment/decrement the ACR.

Note 5: The equivalent charge of an LSB in the accumulated charge register depends on the value of R_{SENSE}: $Q_{LSB} = 533nAh \cdot (50m\Omega/R_{SENSE})$.

Note 7: C_B = Capacitance of one bus line in pF ($10pF \le C_B \le 400pF$).

Note 8: Guaranteed by design, not subject to test.

TYPICAL PERFORMANCE CHARACTERISTICS

Coulomb Counter Gain vs Temperature

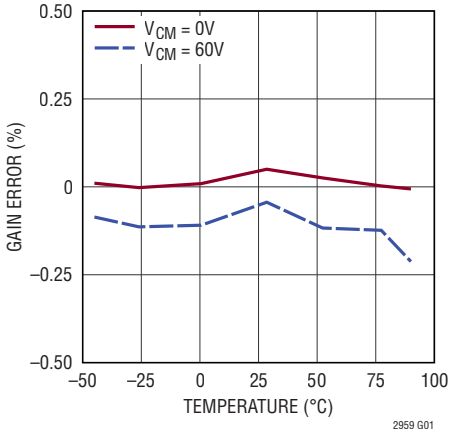

Coulomb Counter Offset vs Common Mode Voltage

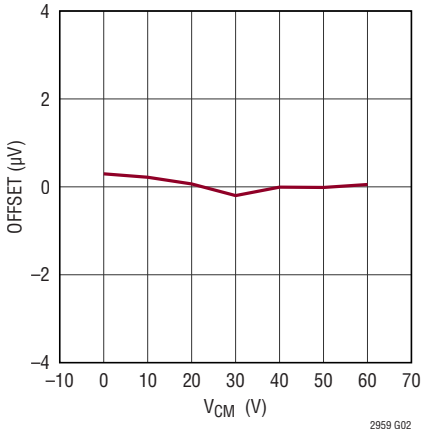

Coulomb Counter Offset vs Temperature

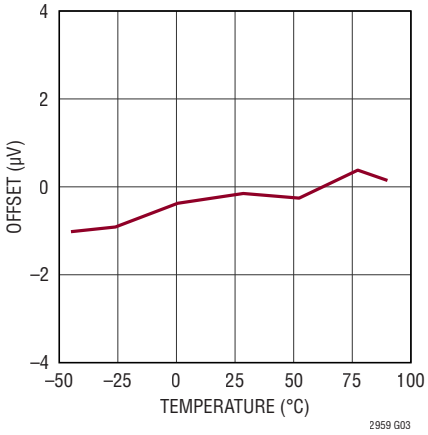

Operating Current vs V_{SENSE}

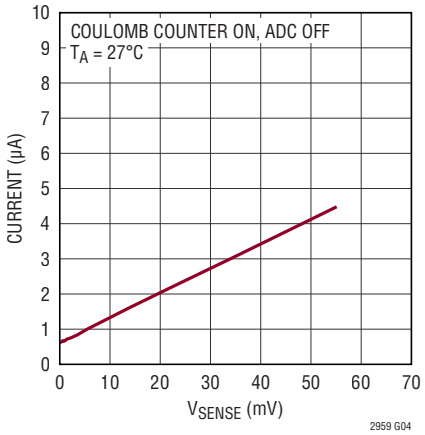

Operating Current vs Supply Voltage

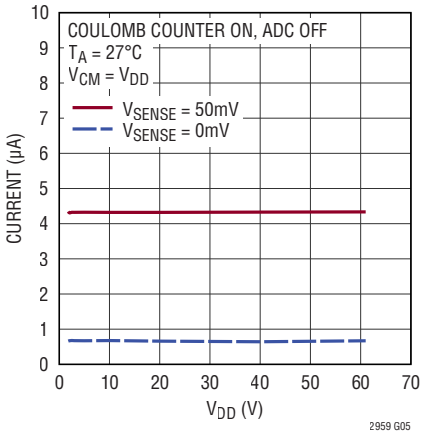

Operating Current vs Temperature

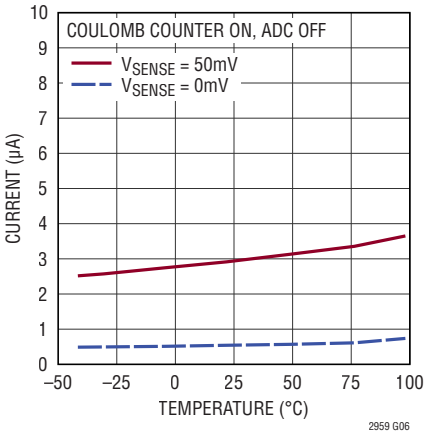

Current ADC Gain Error vs Temperature

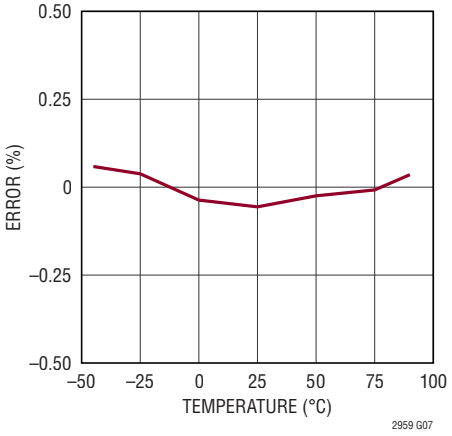

Voltage ADC Gain Error vs Temperature

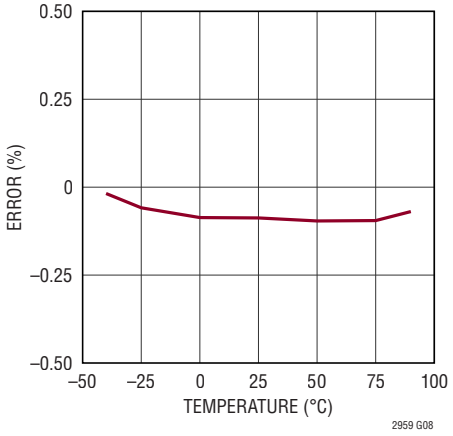

Temperature Sensor Error vs Temperature

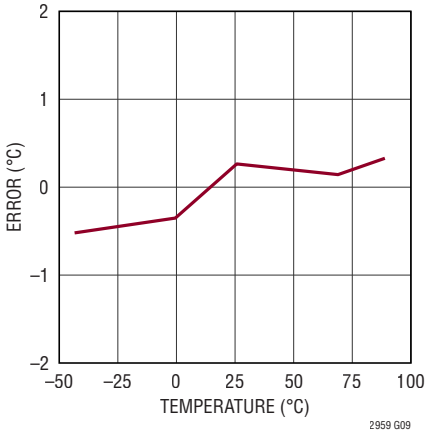

PIN FUNCTIONS

V_{DD} (Pin 1): Power supply with a 1.8V to 60V operating range. Can be supplied from the battery directly by connecting to the load/charger side of the sense resistor, or by any other regulated voltage within range. Bypass to GND (pin 10) with a 100nF capacitor. When register B2 = 0, the Voltage ADC digitizes the voltage between this pin and GND.

SENSEP (Pin 2): Positive Sense Input. This is the non-inverting current-sense input. For high-side sensing, connect SENSEP to the load and charger side of the sense resistor. For low-side sensing, connect to the battery terminal side. The common mode voltage is independent from V_{DD} and can range from 0 to 60V.

SENSEN (Pin 5): Negative Sense Input. This is the inverting current-sense input. For high-side sensing, connect SENSEN to the battery terminal side of the sense resistor. For low-side sensing, connect to the load and charger side. When register B2 = 1, the Voltage ADC digitizes the voltage between this pin and GND.

CFP (Pin 3): Filter Capacitor Positive Input. Connect a 470nF capacitor between CFP and CFN. Do not connect anything else to this pin.

CFN (Pin 4): Filter Capacitor Negative Input. Connect a 470nF capacitor between CFP and CFN. Do not connect anything else to this pin.

SCL (Pin 6): Serial Bus Clock Input.

SDA (Pin 7): Serial Bus Data Input and Output. An external pull-up resistor or current source is required.

GPIO (Pin 8): General Purpose Input/Output. Can be configured as an SMBus alert output, a charge complete logic input or an analog input to the ADC, via control register bits [4:3]. At power-up, the pin defaults to ADC input mode with a full-scale range of 1.56V. When configured for alert functionality, it conforms to the SMBus alert response protocol and behaves as an open-drain logic output that pulls to GND when any threshold register value is exceeded. When configured as a charge complete input, connect to the charge complete output from the battery charger circuit. A low level at this pin sets the value of the ACR (registers D,E,F, G) to FFFFFFFFh. In ADC input mode, when used to digitize a signal with a high source impedance, connect a 100nF bypass capacitor between GPIO and GND.

V_{REG} (Pin 9): Voltage Regulator Output. Bypass with a 1µF capacitor to GND (Pin 10). Do not connect anything else to this pin.

GND (Pin 10): Device Ground. For high-side sensing, connect directly to the negative battery terminal. For low-side sensing, connect to the load and charger side of the sense resistor.

Exposed Pad (Pin 11): Do not connect this pad. For optimal performance, *do not solder the exposed pad to the PCB*.

BLOCK DIAGRAM

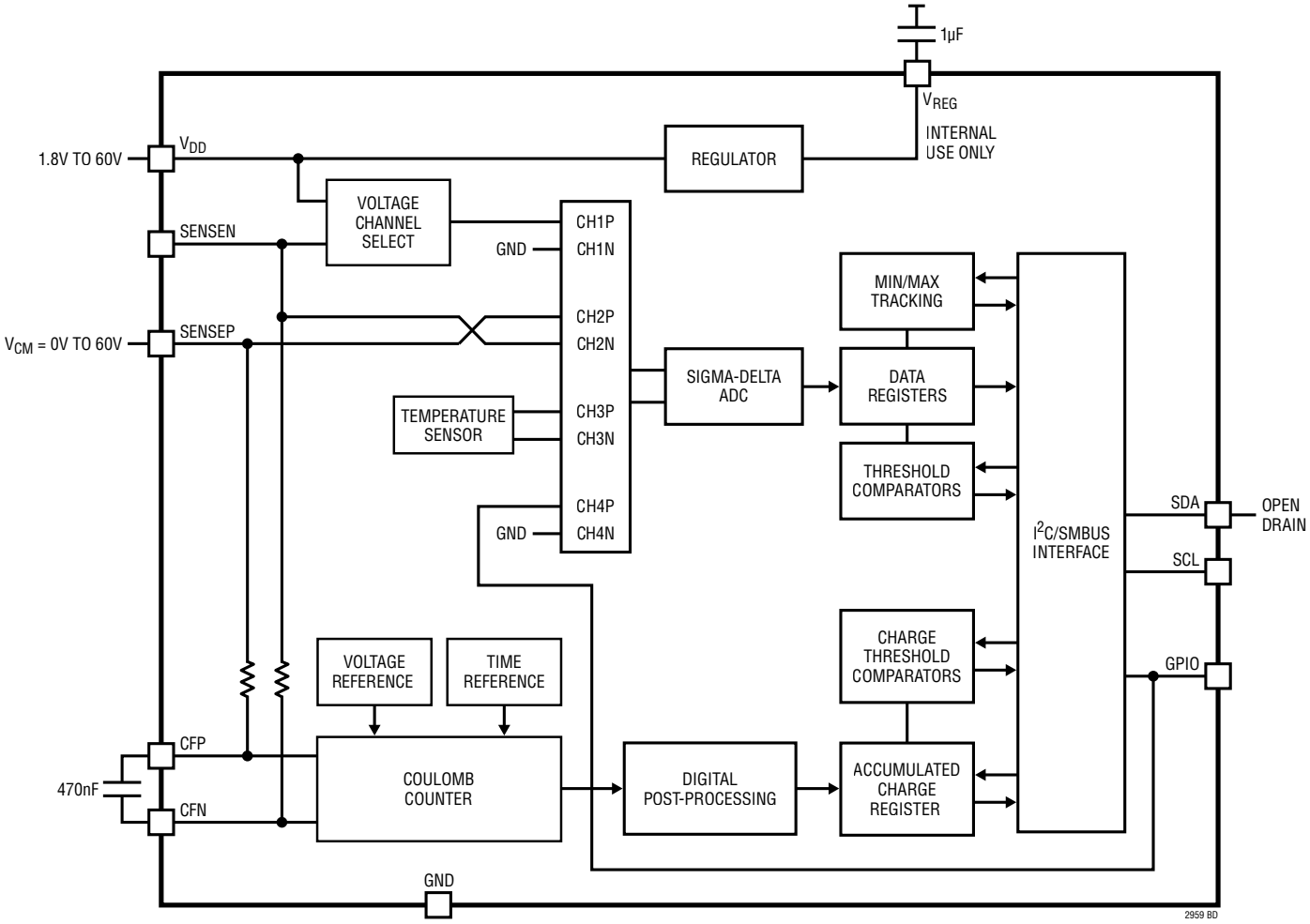

TIMING DIAGRAM

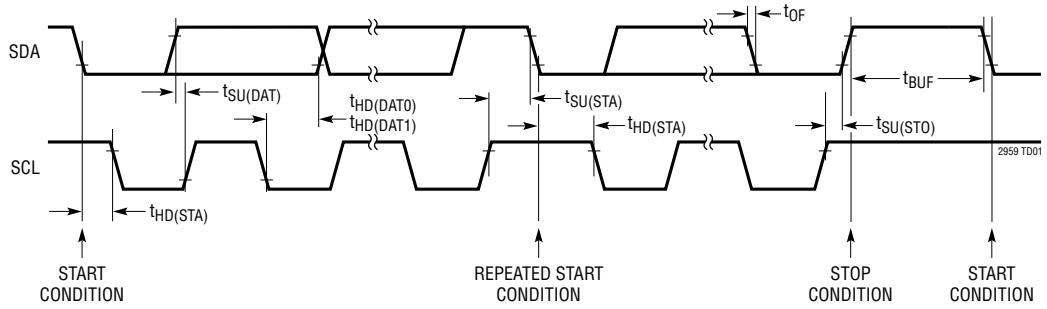

Figure 1. Definition of Timing on I²C Bus

OPERATION

Overview

The LTC2959 is an ultra-low power battery fuel gauge designed for a wide range of batteries. Its high-precision coulomb counter keeps track of charge and discharge by measuring the voltage across an external current sensing resistor. The resistor can be inserted at any point in the battery's current path, accommodating both low-side and high-side sensing configurations.

The LTC2959's supply voltage can range between 1.8V and 60V and can be set independently of the terminal voltages at the sense resistor. Its extremely low operating current allows the LTC2959 to keep track of charge over extended periods of time.

The LTC2959 also measures battery voltage, instantaneous current, its own temperature and an auxiliary input using an internal ADC.

Coulomb Counter

Charge is the time integral of current. The LTC2959 measures charge by monitoring the voltage developed across an external sense resistor. The differential voltage between SENSEP and SENSEN is first low-pass filtered and then applied to a precision coulomb counter. The coulomb counter integrates and then digitizes the differential voltage, incrementing and decrementing the Accumulated Charge Register (ACR) as needed. The ACR and its programmable thresholds can be read out via the I^2C interface.

The coulomb counter modulates its operating current as a function of the signal at its differential input. For small input signals, its typical current reduces to below 1µA. Even at those reduced current levels, its high precision and low offset are maintained. The operating current is independent of the common mode voltage at the SENSE pins.

The coulomb counter can be set to *do not count* mode using register bit C[3]. This stops coulomb counting and prevents the ACR from incrementing/decrementing. In this mode, the operating current is statically low and no longer input dependent.

Coulomb Counter Charge Gain

The coulomb counter's accumulated charge register (ACR) has a fixed LSB of 533nAh and a width of 32 bits. This accommodates a wide variety of batteries; its full scale of 2289Ah should accommodate most large batteries, while even a 10mAh full-scale charge can be resolved to well below 0.01%.

The choice of the external sense resistor value influences the gain of the coulomb counter. The full-scale value of the ACR is based on an R_{SENSE} with a value of 50mΩ. If sense resistors with a different value are used, the value should be scaled as follows:

$$Q_{BAT,EFF} = \frac{50m\Omega}{R_{SENSE}} Q_{BAT,DEFAULT}$$

Deadbanding

In battery gas gauges, an important parameter is the differential offset (V_{OS}) of the circuitry monitoring the battery charge. This is because coulomb counters essentially integrate forever, and so the charge error corresponding to a small offset grows linearly over time. Moreover, for small input voltages (V_{SENSE}), V_{OS} may significantly contribute to the relative charge error. The LTC2959 was designed to have a very low offset (typically 1µV and no more than ±10µV max).

Additionally, the LTC2959 has a programmable deadband: if the absolute value of the average V_{SENSE} over a 0.5s period is smaller than a programmable threshold, the charge measured during that period is not added to the ACR.

Using register bits C [7:6], the programmable threshold can be set to 20, 40 or 80µV, or to 0 (no deadbanding).

Voltage, Current, Temperature and GPIO ADC

The LTC2959 includes a fast, precision, No-Latency ΣΔ analog-to-digital converter, with internal clock and reference circuits. The ADC can be used to monitor the battery voltage via the SENSEN pin or via the V_{DD} pin (in low-side sensing applications); it can also measure

OPERATION

the instantaneous current through the sense resistor, the temperature of the chip, as well as the voltage on the GPIO pin.

ADC conversions can be triggered in a one-shot, periodical or continuous manner, as set by programming the ADC control register via the I^2C interface. Each ADC conversion takes about 400µs to complete.

Initiating a single-shot conversion sequence will cause the ADC to execute the following sequence:

1) 400µs ADC startup
2) 400µs voltage conversion
3) 400µs current conversion
4) 400µs temperature conversion
5) 400µs GPIO conversion (optional)
6) ADC power down

Afterwards, all data is available in the corresponding registers. To include the GPIO channel into the ADC measurements, set register B[4:3] appropriately and configure its full-scale range using B[3].

By default, the ADC operates in sleep mode, in which no conversions are performed. The ADC can also be operated in smart sleep mode, in which the ADC converts voltage, current, temperature (and GPIO) once every 52 seconds. The threshold and min/max registers are also updated, and alerts will trigger appropriately when the LTC2959 is configured as such.

The ADC can also be configured to continuously convert voltage or current, or voltage and current alternatively. In a continuous mode, the ADC startup time sequence step only takes place at the very beginning of ADC operation. Measuring a single quantity continuously leads to a sampling rate of 2.5kS/s.

Voltage ADC Input Range

The accuracy of the ADC Voltage channel is only guaranteed for input voltages between 1.8V and 60V.

Power-Up Sequence

When V_{DD} rises above a threshold of approximately 1.45V, the LTC2959 generates an internal power-on reset (POR) signal that sets all registers to their default state. In the default state, the coulomb counter is active while the multi-purpose ADC operates in sleep mode. The accumulated charge register is set to mid-scale (80000000h) and all ADC channel outputs are set to 0000h. All threshold registers and the min-max tracking registers are set to their default values. The min/max tracking registers of the ADC will update upon completion of the first ADC conversion. The GPIO pin is configured as an analog input; the ALERT and Charge Complete functionalities are not enabled at startup.

Preventing Violation of Absolute Maximum Ratings

The small size, robustness and low impedance of ceramic capacitors make them an attractive option for the supply bypass capacitor of LTC2959. However, these capacitors can cause problems if the LTC2959 is plugged into a live supply close to its maximum voltage of 65V. The low-loss ceramic capacitor, combined with stray inductance in series with the power source, forms an underdamped tank circuit, and the voltage at the V_{DD} pin or the SENSE pins of the LTC2959 can ring several tens of volts, possibly exceeding the LTC2959 rating and damaging the part. This can be prevented by adding a transient voltage suppression diode to the appropriate pin.

Additionally, when operating at high V_{DD} or SENSE voltages (>20V), care should be taken not to pull the digital communication pins SCL, SDA and GPIO below their absolute minimum operating voltage of –0.3V. This may occur, for example, due to differences between the local GND and the GND of the connected microcontroller. This will increase the supply current, and the associated increase in power dissipation might damage the part. This can be prevented by adding Schottky diodes to these communication lines, connecting the anodes to the LTC2959 GND pin.

REGISTER MAP

REGISTER	NAME	LETTER	BITS	R/W	DEFAULT	DATA TYPE
00h	Status	A	A7:A0	COR	See Below	N/A
01h	ADC Control	B	B7:B0	R/W	See Below	N/A
02h	Coulomb Counter Control	C	C7:C0	R/W	See Below	N/A
03h	Accumulated Charge <31:24>	D	D7:D0	R/W	80h	Unsigned
04h	Accumulated Charge <23:16>	E	E7:E0	R/W	00h	Unsigned
05h	Accumulated Charge <15:8>	F	F7:F0	R/W	00h	Unsigned
06h	Accumulated Charge <7:0>	G	G7:G0	R/W	00h	Unsigned
07h	Charge Threshold Low <31:24>	H	H7:H0	R/W	00	Unsigned
08h	Charge Threshold Low <23:16>	I	I7:I0	R/W	00	Unsigned
09h	Charge Threshold Low <15:8>	J	J7:J0	R/W	00	Unsigned
0Ah	Charge Threshold Low <7:0>	K	K7:K0	R/W	00	Unsigned
0Bh	Charge Threshold High <31:24>	L	L7:L0	R/W	FFh	Unsigned
0Ch	Charge Threshold High <23:16>	M	M7:M0	R/W	FFh	Unsigned
0Dh	Charge Threshold High <15:8>	N	N7:N0	R/W	FFh	Unsigned
0Eh	Charge Threshold High <7:0>	O	O7:O0	R/W	FFh	Unsigned
0Fh	Voltage MSB	P	P7:P0	R	00h	Unsigned
10h	Voltage LSB	Q	Q7:Q0	R	00h	Unsigned
11h	Voltage Threshold High MSB	R	R7:R0	R/W	FFh	Unsigned
12h	Voltage Threshold High LSB	S	S7:S0	R/W	FFh	Unsigned
13h	Voltage Threshold Low MSB	T	T7:T0	R/W	00h	Unsigned
14h	Voltage Threshold Low LSB	U	U7:U0	R/W	00h	Unsigned
15h	Max Voltage MSB	V	V7:V0	R/W	00h	Unsigned
16h	Max Voltage LSB	W	W7:W0	R/W	00h	Unsigned
17h	Min Voltage MSB	X	X7:X0	R/W	FFh	Unsigned
18h	Min Voltage LSB	Y	Y7:Y0	R/W	FFh	Unsigned
19h	Current MSB	Z	Z7:Z0	R	00h	Signed
1Ah	Current LSB	AA	AA7:AA0	R	00h	Signed
1Bh	Current Threshold High MSB	AB	AB7:AB0	R/W	7Fh	Signed
1Ch	Current Threshold High LSB	AC	AC7:AC0	R/W	FFh	Signed
1Dh	Current Threshold Low MSB	AD	AD7:AD0	R/W	80h	Signed
1Eh	Current Threshold Low LSB	AE	AE7:AE0	R/W	00h	Signed
1Fh	Max Current MSB	AF	AF7:AF0	R/W	80h	Signed
20h	Max Current LSB	AG	AG7:AG0	R/W	00h	Signed
21h	Min Current MSB	AH	AH7:AH0	R/W	7Fh	Signed
22h	Min Current MSB	AI	AI7:AI0	R/W	FFh	Signed

REGISTER MAP

REGISTER	NAME	LETTER	BITS	R/W	DEFAULT	DATA TYPE
23h	Temperature MSB	AJ	AJ7:AJ0	R	00h	Unsigned
24h	Temperature LSB	AK	AK7:AK0	R	00h	Unsigned
25h	Temperature Threshold High MSB	AL	AL7:AL0	R/W	FFh	Unsigned
26h	Temperature Threshold High LSBs	AM	AM7:AM0	R/W	FFh	Unsigned
27h	Temperature Threshold Low MSB	AN	AN7:AN0	R/W	00h	Unsigned
28h	Temperature Threshold Low LSBs	AO	AO7: AO0	R/W	00h	Unsigned
29h	GPIO Voltage MSB	AP	AP7:AP0	R	00h	Signed
2Ah	GPIO Voltage LSB	AQ	AQ7:AQ0	R	00h	Signed
2Bh	GPIO Threshold High MSB	AR	AR7:AR0	R/W	7Fh	Signed
2Ch	GPIO Threshold High LSB	AS	AS7:AS0	R/W	FFh	Signed
2Dh	GPIO Threshold Low MSB	AT	AT7:AT0	R/W	80h	Signed
2Eh	GPIO Threshold Low LSB	AU	AU7:AU0	R/W	00h	Signed

Status (A) 8-bit

Table: STATUS Register (00h) (Read-Only – Clear on Read)

BIT	NAME	OPERATION	DEFAULT
A7	GPIO Alert	Indicates one of the GPIO limits has been exceeded.	0
A6	Current Alert	Indicates one of the current limits was exceeded.	0
A5	Charge Overflow/Underflow	Indicates that the value of the ACR has hit either top or bottom.	0
A4	Temperature Alert	Indicates one of the temperature limits was exceeded.	0
A3	Charge Alert High	Indicates the upper charge limit was exceeded.	0
A2	Charge Alert Low	Indicates the lower charge limit was exceeded.	0
A1	Voltage Alert	Indicates one of the voltage limits was exceeded.	0
A0	UVLO Alert	Indicates recovery from power bad. If equal to 1, an UVLO has occurred and the content of registers is uncertain.	1

REGISTER MAP

Control (B) 8-bit

Table: CONTROL Register (01h) (Read/Write)

BIT	NAME	OPERATION	DEFAULT
B[7:5]	ADC Mode	[000] Sleep; does not convert and does not update any registers. The coulomb counter is still active. [001] Smart Sleep; converts V, I, T every 52 seconds (tolerance < ±5%); if B[4] is high, also converts GPIO. Updates registers and threshold comparators. [010] Continuously convert V (2.5kS/s) [011] Continuously convert I (2.5kS/s) [100] Continuously convert, alternating between V and I [101] Single-shot convert V, I and T; if B[4] is high, appends GPIO conversion after T. Resets to [000] after completing these conversions. [110] Continuously convert V, I and T; if B[4] is high, appends GPIO conversion after T [111] Unused	[000]
B[4:3]	GPIO Configure	Configures the GPIO pin. [00] Alert mode; logic output; Alert functionality enabled [01] Charge Complete mode; logic input; driving a logic LOW sets the Accumulated Charge Register to 0xFFFFFFFF. [10] Analog input to ADC with ±97.5mV input voltage range [11] Analog input to ADC with 0V to 1.56V input voltage range	[11]
B[2]	Configure Voltage Input	0: ADC uses V_{DD} as voltage input. 1: ADC uses SENSEN as voltage input.	0
B[1:0]	Reserved	Reserved	[00]

Coulomb Counter Configuration (C) 8-bit

Table: Coulomb Counter Configuration Register (02h) (Read/Write)

BIT	NAME	OPERATION	DEFAULT
C[7:6]	Coulomb Counter	Sets the V_{SENSE} threshold below which no charge is added to the Accumulated Charge Register.	[01]
	Deadband	[00] 0µV (no deadband) [01] 20µV [10] 40µV [11] 80µV	
C[5:4]	Reserved	Reserved	[01]
C[3]	Do Not Count	Stops coulomb counting and prevents the Accumulated Charge Register from being incremented/decremented.	0
C[2:0]	Reserved	Reserved	[000]

APPLICATIONS INFORMATION

Internal Registers

The LTC2959 register map is shown above. The LTC2959 integrates current through a sense resistor, measures battery charge, voltage, current and temperature (and, optionally, GPIO), and stores the results in internal registers accessible via I^2C. Charge is stored in a 32-bit register, all other quantities are stored in 16-bit registers. High and low thresholds can be programmed for each measured quantity. The voltage and current ADC channels also include minimum and maximum trackers.

After each voltage, current, temperature or GPIO conversion, the ADC conversion result is compared to the respective threshold registers. If a value in the threshold registers is exceeded, the corresponding bit in the status register is set (A[7], A[6], A[4] or A[1]). If alert mode is enabled, the GPIO pin pulls low.

Analog inputs that exceed the ADC input range will cause overflow or underflow. The corresponding ADC conversion result will be the most negative (underflow) or most positive (overflow) output code. Overflow or underflow will also cause the corresponding status alert bit to be set. If alert mode is enabled, the GPIO pin pulls low.

The minimum and maximum tracking registers will hold the lowest and the highest value measured since their initialization, respectively. These registers are updated after every voltage ADC or current ADC conversion.

The minimum and maximum trackers initialize to the highest and lowest possible conversion result, respectively, and they can be set via I^2C.

The accumulated charge register can be configured by writing a target 32-bit value to it via I^2C, or by asserting charge complete (CC). When GPIO is configured in digital input mode and it is pulled low externally, CC is asserted and the ACR will be set to 32'hFFFFFFFF. Coulomb counting only resumes when CC is no longer asserted.

Do not simultaneously assert charge complete and attempt to write the ACR to a target value over I^2C.

The ACR is compared to the charge thresholds every time the coulomb counter increments or decrements it. If the ACR value exceeds the threshold register values, the corresponding bits A[3] or A[2] are set. Bit A[5] is set if the ACR overflows or underflows. At each overflow or underflow, the ACR rolls over and resumes integration.

All status register bits are cleared after being read by the host but may be reasserted after the next ADC conversion or charge integration, if the corresponding alert condition is still fulfilled.

Processing Digital Results

The LTC2959 can measure charge, voltage, current and temperature.

To calculate the amount of charge represented by the ACR, read out registers D, E, F and G in a single sequential read. Their combined output yields an unsigned 32-bit number, which should be multiplied by the ACR LSB size, QLSB = 533nAh, to obtain the total charge.

The result of the 16-bit ADC conversion of the voltage at either V_{DD} or SENSEN (depending on the ADC control settings) is stored in the voltage registers (P, Q). This data is unsigned. From the result of the 16-bit voltage register RESULT[15:0] = P[7:0]Q[7:0], the measured voltage can be calculated as:

$$V_{BAT} = 62.6V \bullet \frac{RESULT_{dec}}{65536}$$

The values in the voltage threshold and min/max tracking registers, registers R, S, T, U, V, W, X ansd Y, are also stored in unsigned notation. As an example, to set the voltage low threshold to 3.72V, write registers T[7:0]U[7:0] to 0F37h.

The result of the 16-bit ADC conversion of the current is stored in the current registers (Z, AA). The ADC measures battery current by converting the voltage, V_{SENSE}, across the sense resistor R_{SENSE}. Depending on whether the battery is being charged or discharged, the measured voltage drop on R_{SENSE} is positive or negative.

The result in registers Z and AA is stored in signed, two's complement notation. Bit Z[7] is the sign bit of the result. The battery current can be obtained from the two-byte

APPLICATIONS INFORMATION

register RESULT[15:0] = Z[7:0]AA[7:0] and the value of the chosen sense resistor R_{SENSE} as follows:

If RESULT[15] = 0:

$$I_{BAT} = \frac{97.5mV}{R_{SENSE}} \bullet \frac{RESULT[14:0]_{dec}}{32768}$$

If RESULT[15] = 1:

$$I_{BAT} = \frac{97.5mV}{R_{SENSE}} \bullet \frac{-32768 + RESULT[14:0]_{dec}}{32768}$$

The values in the current threshold and min/max tracking registers, register AB, AC, AD, AE, AF, AG, AH and AI, are also stored in signed, two's complement notation.

The internal temperature of the LTC2959 can be calculated by reading out registers AJ and AK. Combining these into RESULT[15:0] = AJ[7:0]AK[7:0], the device temperature in Celsius is given by:

$$T_C = 825 \bullet \frac{RESULTdec}{65536} - 273.15$$

The ADC can also be configured to measure the analog voltage at the GPIO pin. The full-scale input range can be selected via the ADC control register and is either ±97.5mV or from 0V to 1.56V. In *both* cases, the result data is stored in registers AP and AQ and in both cases, the data is stored in signed, two's complement notation. To calculate the analog voltage from the digital result, use the same equations as for the ADC current channel, replacing 97.5mV with 1.56V when the wide full-scale input range is selected (register bit B[3] = 1).

I²C/SMBus interface

The LTC2959 communicates with a bus master using a 2-wire interface compatible with I²C and SMBus. The 7-bit hardcoded I²C address of the LTC2959 is 1100011 (0xC6).

The LTC2959 is a slave-only device. The serial clock line (SCL) is input-only while the serial data line (SDA) is bidirectional. The device supports I²C standard and fast mode. For more details, refer to the I²C protocol section.

I²C protocol

The LTC2959 uses an I²C/SMBus-compatible 2-wire interface supporting multiple devices on a single bus. Connected devices can only pull the bus lines low and must never drive the bus high. The bus wires are externally connected to a positive supply via current sources or pull-up resistors. When the bus is idle, all bus lines are high. Data on the I²C bus can be transferred at rates of up to 100kbit/s in standard mode and up to 400kbit/s in fast mode.

Each device on the I²C/SMBus is recognized by a unique address stored in that device and can operate as either a transmitter or receiver, depending on the function of the device. In addition to transmitters and receivers, devices can also be classified as masters or slaves when performing data transfers. A master is the device which initiates a data transfer on the bus and generates the clock signals to permit that transfer. At the same time any device addressed is considered a slave. The LTC2959 always acts as a slave.

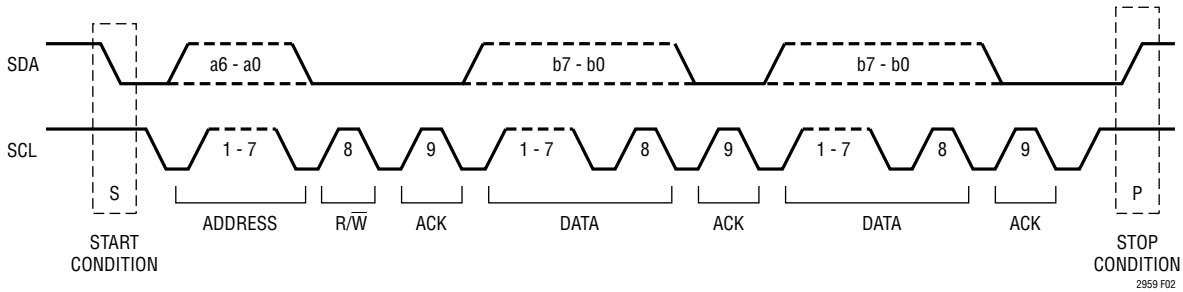

Figure 2. Data Transfer Over I²C or SMBus

APPLICATIONS INFORMATION

Start and Stop Conditions

When the bus is idle, both SCL and SDA must be high. A bus master signals the beginning of a transmission with a START condition by transitioning SDA from high to low while SCL is high. When the master has finished communicating with the slave, it issues a STOP condition by transitioning SDA from low to high while SCL is high. The bus is then free for another transmission. When the bus is in use, it stays busy if a repeated START (Sr) is generated instead of a STOP condition. The repeated START (Sr) conditions are functionally identical to the START (S).

Write Protocol

The master begins a write operation with a START condition followed by the seven-bit slave address 1100011 and the R/W bit set to zero. The LTC2959 acknowledges this by pulling SDA low and the master sends a command byte which indicates which internal register the master is to write. The LTC2959 acknowledges and latches the command byte into its internal register address pointer. The master delivers the data byte, the LTC2959 acknowledges once more and latches the data into the desired register. The transmission is ended when the master sends a STOP condition. If the master continues by sending a second data byte instead of a stop, the LTC2959 acknowledges again, increments its address pointer and latches the second data byte in the following register.

Multi-byte quantities can only be written using a sufficiently long I^2C burst write.

Read Protocol

The master begins a read operation with a START condition followed by the seven-bit slave address 1100011 and the R/W bit set to zero. The LTC2959 acknowledges and the master sends a command byte which indicates which internal register the master is to read. The LTC2959 acknowledges and then latches the command byte into its internal register address pointer. The master then sends a repeated START condition followed by the same seven-bit address with the R/W bit now set to one. The LTC2959 acknowledges and sends the contents of the requested register. The transmission is ended when the master sends a STOP condition. If the master acknowledges the transmitted data byte, the LTC2959 increments its address pointer and sends the contents of the following register.

Multi-byte quantities should be read using a sufficiently long I^2C burst read.

I^2C Timeout

The device includes a timer to ensure that it does not hold SDA low indefinitely in the absence of a clock. This timeout interval is typically 51.2ms. When no clock pulses are received for the duration of this interval, the LTC2959 releases the SDA pin and the communication interface is reset.

Alert Response Protocol

In a system where several slaves share a common interrupt line, the master can use the alert response address (ARA) to determine which device initiated the interrupt. The master initiates the ARA procedure with a START condition and the special 7-bit ARA bus address (0001100) followed by the read bit (R) = 1. If the LTC2959 is asserting an alert, it acknowledges and responds by sending its 7-bit bus address (1100011) and a 1. While it is sending its address, it monitors the SDA pin to see if another device is sending an address at the same time using standard I^2C bus arbitration. If the LTC2959 is sending a 1 and reads a 0 on the SDA pin on the rising edge of SCL, it assumes another device with a lower address is sending and the LTC2959 immediately aborts its transfer and waits for the next ARA cycle to try again. If transfer is successfully completed, the LTC2959 will stop pulling down the GPIO pin and will not respond to further ARA requests until a new Alert event occurs.

Reconfiguring the LTC2959's GPIO pin as an analog or a digital input immediately clears the Alert pull-down. Afterwards, when the GPIO pin is configured as a digital output again, the LTC2959 will only pull down GPIO when a new alert event occurs.

APPLICATIONS INFORMATION

The state of the GPIO pin and the internal Alert pull-down signal have no effect on the Status register. The status bits are set upon the arrival of an alert event, and they are cleared upon readout of the status register.

Internal Data RW/I²C Arbitration

When I²C communication coincides with the ADC finishing a conversion or its accumulated charge register incrementing/decrementing, there is a potential risk of reading out corrupted data. To prevent this, the LTC2959 independently masks the internal updating of the ACR and each of the ADC output registers when they are being read out via I²C. Use burst reads to ensure that all bytes of a quantity of interest are read out in a single I²C transaction. Use burst writes for all threshold/min/max registers to ensure that their comparisons take place using the full data.

Upon receiving an I²C stop command, the LTC2959 will release the register masking. If at least one new conversion result has been received internally during I²C communication, the latest conversion result will immediately be loaded into the corresponding register, ready for I²C readout.

The min/max trackers and threshold comparators will function regardless of I²C communication.

PCB Board Layout Suggestions

Keep all traces as short as possible to minimize noise and inaccuracy. Use a 4-wire Kelvin sense connection for the sense resistor, locating the LTC2959 close to the resistor with short sense-traces to the SENSEP and SENSEN pins. Use wider traces from the resistor to the battery, load and/or charger. Place the bypass capacitors on V_{DD} and V_{REG} close to the LTC2959. Place the filter capacitor across CFP and CFN between the sense resistor and the LTC2959. To minimize leakage, do not solder the exposed pad.

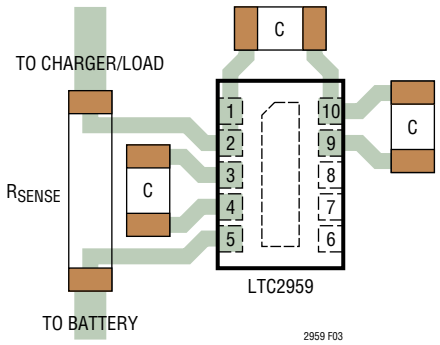

Figure 3. Kelvin Connection on Sense Resistor

PACKAGE DESCRIPTION

DDB Package
10-Lead Plastic DFN (3mm × 2mm)
(Reference LTC DWG # 05-08-1722 Rev Ø)

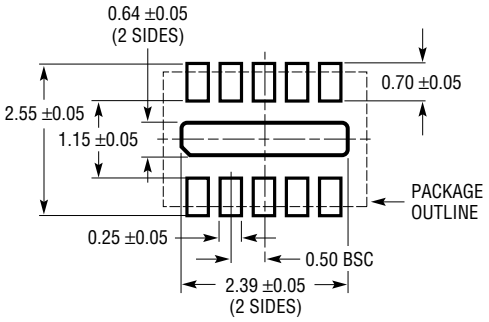

RECOMMENDED SOLDER PAD PITCH AND DIMENSIONS

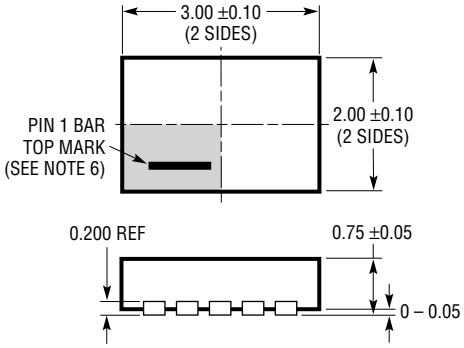

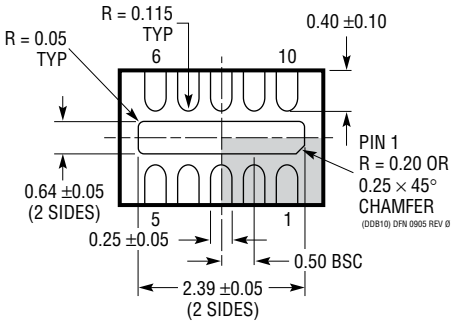

BOTTOM VIEW—EXPOSED PAD

NOTE:
1. DRAWING CONFORMS TO VERSION (WECD-1) IN JEDEC PACKAGE OUTLINE M0-229
2. DRAWING NOT TO SCALE
3. ALL DIMENSIONS ARE IN MILLIMETERS
4. DIMENSIONS OF EXPOSED PAD ON BOTTOM OF PACKAGE DO NOT INCLUDE MOLD FLASH. MOLD FLASH, IF PRESENT, SHALL NOT EXCEED 0.15mm ON ANY SIDE
5. EXPOSED PAD SHALL BE SOLDER PLATED
6. SHADED AREA IS ONLY A REFERENCE FOR PIN 1 LOCATION ON THE TOP AND BOTTOM OF PACKAGE

Information furnished by Analog Devices is believed to be accurate and reliable. However, no responsibility is assumed by Analog Devices for its use, nor for any infringements of patents or other rights of third parties that may result from its use. Specifications subject to change without notice. No license is granted by implication or otherwise under any patent or patent rights of Analog Devices.

TYPICAL APPLICATION

Battery Charger with Gas Gauge

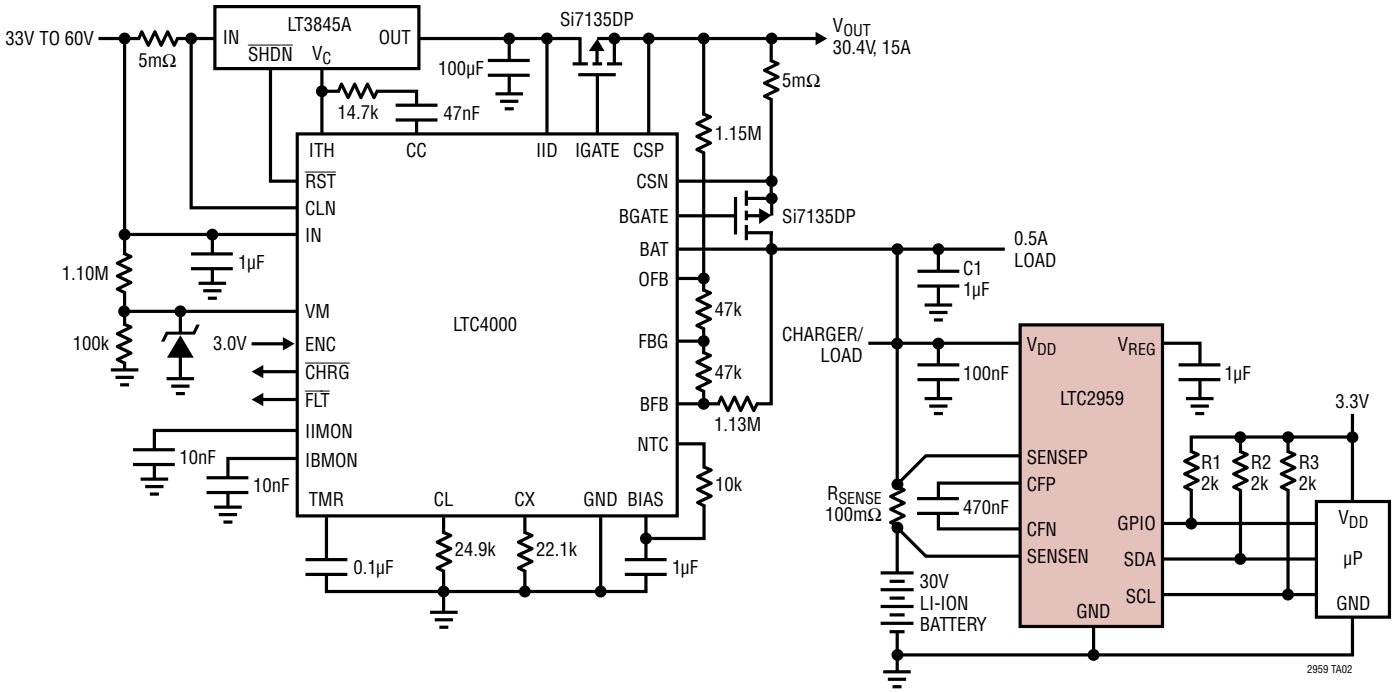

RELATED PARTS

PART NUMBER	DESCRIPTION	COMMENTS
Battery Gas Gauges		
LTC2943	I²C Battery Gas Gauge with Voltage, Current and Temperature ADC	3.6V to 20V Operation, 14-Bit ΔΣ-ADC, Pin Compatible with LTC2944, LTC2943-1, 8-Lead (3mm × 3mm) DFN Package
LTC2944	I²C Battery Gas Gauge with Voltage, Current and Temperature ADC	3.6V to 60V Operation, 14-Bit ΔΣ-ADC, Pin Compatible with LTC2943, 8-Lead (3mm × 3mm) DFN Package
LTC2941	I²C Battery Gas Gauge	2.7V to 5.5V Operation, 6-Lead (2mm × 3mm) DFN Package
LTC2942	I²C Battery Gas Gauge with Temperature, Voltage Measurement	2.7V to 5.5V Operation, 14-Bit ΔΣ-ADC, 6-Lead (2mm × 3mm) DFN Package
LTC4150	Coulomb Counter/Battery Gas Gauge	2.7V to 8.5V Operation, 10-Pin MSOP Package
Battery Chargers		
LTC4000	High Voltage High Current Controller for Battery Charging and Power Management	3V to 60V Operation, 28-Lead (4mm × 5mm) QFN or SSOP Packages
LTC4009	High Efficiency, Multi-Chemistry Battery Charger	6V to 28V Operation, 20-Lead (4mm × 4mm) QFN Package
LTC4012	High Efficiency, Multi-Chemistry Battery Charger with PowerPath™ Control	6V to 28V Operation, 20-Lead (4mm × 4mm) QFN Package
LT®3652HV	Power Tracking 2A Battery Charger	Input Supply Voltage Regulation Loop for Peak Power Tracking, 5V to 34V Operation, 1MHz, 2A Charge Current, 3mm × 3mm DFN-12 and MSOP-12 Packages

© ANALOG DEVICES, INC. 2022