Single Phase Step-Down DC/DC Controller with Digital Power System Management

FEATURES

- **PMBus/I²C Compliant Serial Interface**
  - **Telemetry Read-Back Includes V_{IN}, I_{IN}, V_{OUT}, I_{OUT}, Temperature and Faults**
  - **Programmable Voltage, Current Limit, Digital Soft-Start/Stop, Sequencing, Margining, OV/UV/OC and Frequency Synchronization (250kHz to 1MHz)**
- **±0.5% Output Voltage Accuracy over Temperature**
- **Integrated 16-Bit ADC and 12-Bit DAC**
- **Integrated High Side Current Sense Amplifier**
- **Internal EEPROM and Fault Logging**
- **Integrated N-Channel MOSFET Gate Drivers**

Power Conversion

- Wide V_{IN} Range: 4.5V to 24V
- V_{OUT} Range: 0.5V to 5.4V
- Analog Current Mode Control Loop
- Accurate PolyPhase® Current Sharing for Up to 6 Phases
- Auto Calibration of Inductor DCR
- Available in a 32-Lead (5mm × 5mm) QFN Package

APPLICATIONS

- High Current Distributed Power Systems
- Telecom Systems
- Intelligent Energy Efficient Power Regulation

DESCRIPTION

The LTC®3883/LTC3883-1 are PolyPhase capable DC/DC synchronous step-down switching regulator controllers with a PMBus compliant serial interface. The controllers use a constant frequency, current mode architecture that is supported by the LTPowerPlay™ software development tool with graphical user interface (GUI).

Switching frequency, output voltage, and device address can be programmed using external configuration resistors. Additionally, parameters can be set via the digital interface or stored in on-chip EEPROM.

The LTC3883/LTC3883-1 can be configured for Burst Mode® operation, discontinuous (pulse-skipping) mode or continuous inductor current mode. The LTC3883 incorporates an internal 5V linear regulator while the LTC3883-1 uses an external 5V supply for minimum power loss.

The LTC3883/LTC3883-1 are available in a 32-lead 5mm × 5mm QFN package.

LT, LTC, LTM, OPTI-LOOP, PolyPhase, Burst Mode, µModule, Linear Technology and the Linear logo are registered trademarks and LTpowerPlay, No R_{SENSE} and UltraFast are trademarks of Linear Technology Corporation. All other trademarks are the property of their respective owners. Protected by U.S. Patents including 5481178, 5705919, 5929620, 6100678, 6144194, 6177787, 5408150, 6580258, 6304066, 7420359. Licensed under U.S. Patent 7000125 and other related patents worldwide.

TYPICAL APPLICATION

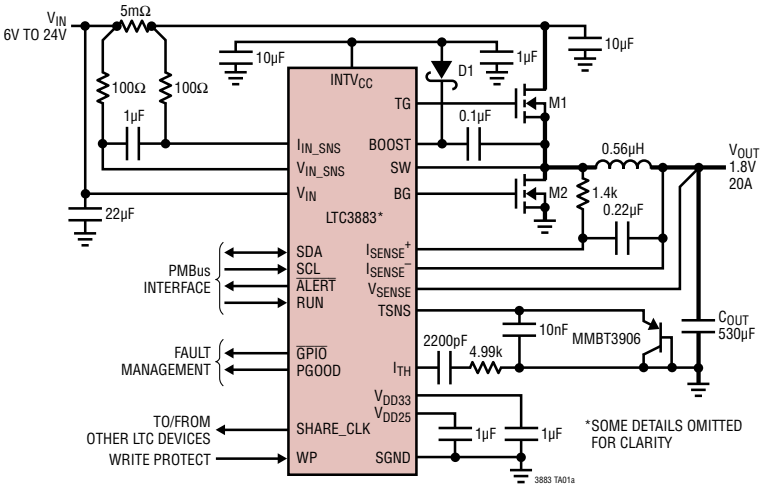

Efficiency and Power Loss vs Load Current

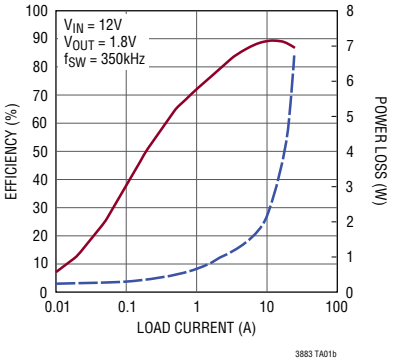

TABLE OF CONTENTS

Features 1
Applications 1
Typical Application 1
Description 1
Table of Contents 2
Absolute Maximum Ratings 4
Pin Configuration 4
Order Information 4
Electrical Characteristics 5
Typical Performance Characteristics 9
Pin Functions 12
Block Diagram 14
Operation 15
Overview 15
Main Control Loop 15
EEPROM 16
Power Up and Initialization 16
Soft-Start 17
Sequencing 17
Voltage-Based Sequencing 18
Shutdown 18
Light Load Current Operation 19
Switching Frequency and Phase 19
Output Voltage Sensing 20
Output Current Sensing 20
Auto Calibration 20
Accurate DCR Temperature Compensation 20
Input Current Sensing 20
Load Sharing 21
External/Internal Temperature Sense 21
RCONFIG (Resistor Configuration) Pins 22
Fault Detection and Handling 23
CRC Failure 24
Serial Interface 24
Communication Failure 24
Device Addressing 24
Responses to V_{OUT} and I_{OUT} Faults 25
Output Overvoltage Fault Response 25
Output Undervoltage Response 25
Peak Output Overcurrent Fault Response 25
Responses to Timing Faults 26
Responses to V_{IN} OV Faults 26
Responses to OT/UT Faults 26
Overtemperature Fault Response—Internal 26
Overtemperature and Undertemperature Fault Response—Externals 26
Responses To Input Overcurrent And Output Undercurrent Faults 27
Responses to External Faults 27
Fault Logging 27
Bus Timeout Failure 27
Similarity Between PMBus, SMBus and I^2C 2-Wire Interface 27
PMBus Serial Digital Interface 28
PMBus Command Summary 31
PMBus Commands 31
*Data Format 36
Applications Information 37
Current Limit Programming 37
I_{SENSE}^+ and I_{SENSE}^- Pins 37
Low Value Resistor Current Sensing 38
Inductor DCR Current Sensing 39
Slope Compensation and Inductor Peak Current 40
Inductor Value Calculation 40
Inductor Core Selection 41
Power MOSFET and Schottky Diode (Optional) Selection 41
Variable Delay Time, Soft-Start and Output Voltage Ramping 42
Digital Servo Mode 43
Soft Off (Sequenced Off) 43
$INTV_{CC}$ Regulator 44

TABLE OF CONTENTS

Topside MOSFET Driver Supply (C_B, D_B) 45
Undervoltage Lockout 45
C_{IN} and C_{OUT} Selection 45
Fault Conditions 46
Open-Drain Pins 47
Phase-Locked Loop and Frequency Synchronization 47
Minimum On-Time Considerations 48
Input Current Sense Amplifier 48
RCONFIG (External Resistor Configuration Pins) 49
Voltage Selection 49
Frequency and Phase Selection Using RCONFIG 51
Address Selection Using RCONFIG 51
Efficiency Considerations 52
Checking Transient Response 52
PolyPhase Configuration 53
PC Board Layout Checklist 54
PC Board Layout Debugging 56
Design Example 56
Connecting the USB to I^2C/SMBus/PMBus Controller to the LTC3883 In System 58
Inductor DCR Auto Calibration 59
Accurate DCR Temperature Compensation 60
LTpowerPlay: An Interactive GUI for Digital Power 61
PMBus Communication and Command Processing 61
PMBus Command Details 64
Addressing and Write Protect 64
General Configuration COMMANDS 65
On/Off/Margin 66
PWM Configuration 68
Voltage 70
Input Voltage and Limits 70
Output Voltage and Limits 71
Current 74
Output Current Calibration 74
Output Current 76
Input Current Calibration 77
Input Current 78
Temperature 78
External Temperature Calibration 78
External Temperature Limits 79
Timing 80
Timing—On Sequence/Ramp 80
Timing—Off Sequence/Ramp 81
Precondition for Restart 81
Fault Response 82
Fault Responses All Faults 82
Fault Responses Input Voltage 82
Fault Responses Output Voltage 83
Fault Responses Output Current 85
Fault Responses IC Temperature 86
Fault Responses External Temperature 87
Fault Sharing 88
Fault Sharing Propagation 88
Fault Sharing Response 90
Scratchpad 90
Identification 91
Telemetry 96
NVM Memory Commands 100
Store/Restore 100
Fault Logging 101
Block Memory Write/Read 105
Typical Applications 106
Package Description 110
Revision History 111
Typical Application 112
Related Parts 112

ABSOLUTE MAXIMUM RATINGS (Note 1)

V_{IN}, SW ..... –0.3V to 28V
Topside Driver Voltage (BOOST) ..... –0.3V to 34V
Switch Transient Voltage (SW) ..... –5V to 28V
$EXTV_{CC}$, $INTV_{CC}$, BG, (BOOST – SW) ..... –0.3V to 6V
V_{SENSE}^+, I_{SENSE}^+, I_{SENSE}^- ..... –0.3V to 6V
RUN, SDA, SCL, $\overline{ALERT}$ ..... –0.3V to 5.5V
FREQ_CFG, V_{OUT_CFG}, V_{TRIM_CFG},
ASEL, V_{DD25} ..... –0.3V to 2.75V
V_{SENSE}^- ..... –0.3V to 0.3V
(V_{IN_SNS} – V_{IN}), (V_{IN} – I_{IN_SNS}) ..... –0.3V to 0.3V
PGOOD, $\overline{GPIO}$, SHARE_CLK, I_{TH},
V_{DD33}, SYNC, WP ..... –0.3V to 3.6V
$INTV_{CC}$ Peak Output Current 100mA
Operating Junction Temperature Range
(Notes 2, 15) ..... –40°C to 125°C
Storage Temperature Range ..... –65°C to 125°C

PIN CONFIGURATION

LTC3883

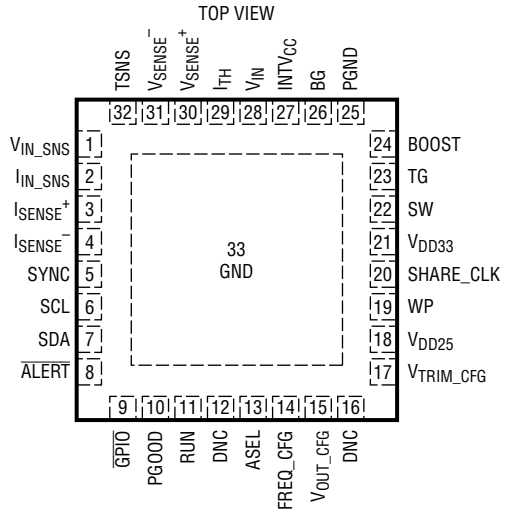

UH PACKAGE
32-LEAD (5mm × 5mm) PLASTIC QFN

T_{JMAX} = 125°C, θ_{JA} = 44°C/W, θ_{JC} = 7.3°C/W
EXPOSED PAD (PIN 33) IS GND, MUST BE SOLDERED TO PCB

LTC3883-1

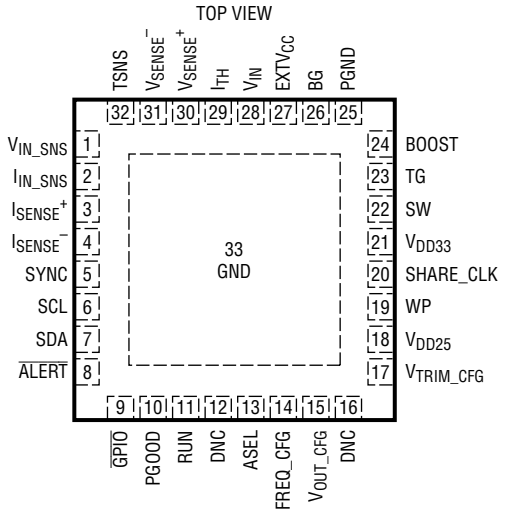

UH PACKAGE
32-LEAD (5mm × 5mm) PLASTIC QFN

T_{JMAX} = 125°C, θ_{JA} = 44°C/W, θ_{JC} = 7.3°C/W
EXPOSED PAD (PIN 33) IS GND, MUST BE SOLDERED TO PCB

ORDER INFORMATION

LEAD FREE FINISH	TAPE AND REEL	PART MARKING*	PACKAGE DESCRIPTION	TEMPERATURE RANGE
LTC3883EUH#PBF	LTC3883EUH#TRPBF	3883	32-Lead (5mm × 5mm) Plastic QFN	–40°C to 105°C
LTC3883IUH#PBF	LTC3883IUH#TRPBF	3883	32-Lead (5mm × 5mm) Plastic QFN	–40°C to 125°C
LTC3883EUH-1#PBF	LTC3883EUH-1#TRPBF	38831	32-Lead (5mm × 5mm) Plastic QFN	–40°C to 105°C
LTC3883IUH-1#PBF	LTC3883IUH-1#TRPBF	38831	32-Lead (5mm × 5mm) Plastic QFN	–40°C to 125°C

Consult LTC Marketing for parts specified with wider operating temperature ranges. *The temperature grade is identified by a label on the shipping container.
Consult LTC Marketing for information on non-standard lead based finish parts.

For more information on lead free part marking, go to: http://www.linear.com/leadfree/
For more information on tape and reel specifications, go to: http://www.linear.com/tapeandreel/

ELECTRICAL CHARACTERISTICS

The ● denotes the specifications which apply over the specified operating junction temperature range, otherwise specifications are at T_J = 25°C (Note 2). V_{IN} = 12V, V_{RUN} = 3.3V, f_{SYNC} = 500kHz (externally driven) unless otherwise specified.

SYMBOL	PARAMETER	CONDITIONS		MIN	TYP	MAX	UNITS
Input Voltage							
V_{IN}	Input Voltage Range	(Note 12)	●	4.5		24	V
I_Q	Input Voltage Supply Current Normal Operation	(Note 14) V_{RUN} = 3.3V, No Caps on TG and BG V_{RUN} = 0V			 30 20		 mA mA
V_{UVLO}	Undervoltage Lockout Threshold when V_{IN} > 4.2V	V_{INTVCC}/V_{EXTVCC} Falling V_{INTVCC}/V_{EXTVCC} Rising			3.7 3.95		V V
T_{INT}	Initialization Time from V_{IN} Applied Until the TON_DELAY Timer Starts				145		ms
Control Loop							
V_{OUTR0}	Full-Scale Voltage Range 0 Set Point Accuracy (0.6V to 5V) Resolution LSB Step Size	VOUT_COMMAND = 5.500V (Note 9)	● ●	5.422 –0.5	 12 1.375	5.576 0.5	V % Bits mV
V_{OUTR1}	Full-Scale Voltage Range 1 Set Point Accuracy (0.6V to 2.5V) Resolution LSB Step Size	VOUT_COMMAND = 2.75V (Note 9)	● ●	2.711 –0.5	 12 0.6875	2.788 0.5	V % Bits mV
$V_{LINEREG}$	Line Regulation	6V < V_{IN} < 24V	●			±0.02	%/V
$V_{LOADREG}$	Load Regulation	ΔV_{ITH} = 1.35V – 0.7V ΔV_{ITH} = 1.35V – 2.0V	● ●		0.01 –0.01	0.1 –0.1	% %
g_m	Error Amplifier g_m	I_{TH} =1.22V			3		mmho
I_{ISENSE}	Input Current	V_{ISENSE} = 5.5V	●		±1	±2	µA
$V_{SENSERIN}$	V_{SENSE} Input Resistance to Ground	0V ≤ V_{PIN} ≤ 5.5V			47		kΩ
$V_{IILIMIT}$	Resolution				3		bits
	$V_{ILIMMAX}$	Hi Range Lo Range	● ●	68 44	75 50	82 56	mV mV
	$V_{ILIMMIN}$	Hi Range Lo Range			37.5 25		mV mV
Gate Driver							
TG t_r t_f	TG Transition Time: Rise Time Fall Time	(Note 4) C_{LOAD} = 3300pF C_{LOAD} = 3300pF			 30 30		 ns ns
BG t_r t_f	BG Transition Time: Rise Time Fall Time	(Note 4) C_{LOAD} = 3300pF C_{LOAD} = 3300pF			 20 20		 ns ns
TG/BG t_{1D}	Top Gate Off to Bottom Gate On Delay Time	(Note 4) C_{LOAD} = 3300pF			10		ns
BG/TG t_{2D}	Bottom Gate Off to Top Gate On Delay Time	(Note 4) C_{LOAD} = 3300pF			30		ns
$t_{ON(MIN)}$	Minimum On-Time				90		ns
OV/UV Output Voltage Supervisor							
N	Resolution				8		bits
V_{RANGE0}	Voltage Range	Range Value = 0		1		5.5	V
V_{RANGE1}	Voltage Range	Range Value = 1		0.4		2.7	V
V_{OUSTP0}	Step Size	Range Value = 0			22		mV
V_{OUSTP1}	Step Size	Range Value = 1			11		mV
V_{THACC0}	Threshold Accuracy 2V < V_{OUT} < 5V	Range Value = 0	●			±2	%
V_{THACC1}	Threshold Accuracy 0.9V < V_{OUT} < 2.5V	Range Value = 1	●			±2	%
$t_{PROPOV1}$	OV Comparator to GPIO Low Time	V_{OD} = 10% of Threshold				35	µs
$t_{PROPUV1}$	UV Comparator to GPIO Low Time	V_{OD} = 10% of Threshold				35	µs

ELECTRICAL CHARACTERISTICS

The ● denotes the specifications which apply over the specified operating junction temperature range, otherwise specifications are at T_J = 25°C (Note 2). V_{IN} = 12V, V_{RUN} = 3.3V, f_{SYNC} = 500kHz (externally driven) unless otherwise specified.

SYMBOL	PARAMETER	CONDITIONS		MIN	TYP	MAX	UNITS
V_{IN} Voltage Supervisor							
N	Resolution				8		bits
$V_{INRANGE}$	Full-Scale Voltage			4.5		20	V
V_{INSTP}	Step Size				82		mV
$V_{INTHACC}$	Threshold Accuracy 8.75V < V_{IN} < 20V		●			±2.5	%
$t_{PROPVIN}$	Comparator Response Time (VIN_ON and VIN_OFF)	V_{OD} = 10% of Threshold				100	µs
Output Voltage Readback							
N	Resolution LSB Step Size				16 244		Bits µV
$V_{F/S}$	Full-Scale Sense Voltage	(Note 10) V_{RUN} = 0V (Note 8)			8		V
V_{OUT_TUE}	Total Unadjusted Error	T_J = 25°C, V_{OUT} > 0.6V (Note 8)	 ●		0.2	 0.5	% %
V_{OS}	Zero-Code Offset Voltage		●			±500	µV
$t_{CONVERT}$	Conversion Time	(Note 6)			90		ms
V_{IN} Voltage Readback							
N	Resolution	(Note 5)			10		Bits
$V_{F/S}$	Full-Scale Input Voltage	(Note 11)			38.91		V
V_{IN_TUE}	Total Unadjusted Error	T_J = 25°C, V_{VIN} > 4.5V	 ●			0.4 2	% %
$t_{CONVERT}$	Conversion Time	(Note 6)			90		ms
Output Current Readback							
N	Resolution LSB Step Size	(Note 5) 0V ≤ $\lvert V_{ISENSE}^+ - V_{ISENSE}^- \rvert$ < 16mV 16mV ≤ $\lvert V_{ISENSE}^+ - V_{ISENSE}^- \rvert$ < 32mV 32mV ≤ $\lvert V_{ISENSE}^+ - V_{ISENSE}^- \rvert$ < 63.9mV 63.9mV ≤ $\lvert V_{ISENSE}^+ - V_{ISENSE}^- \rvert$ < 127.9mV			10 15.25 31.25 62.5 125		Bits µV µV µV µV
$I_{F/S}$	Full-Scale Input Current	(Note 7) R_{ISENSE} = 1mΩ			±128		A
I_{OUT_TUE}	Total Unadjusted Error	(Note 8) V_{ISENSE} > 6mV	●			±1	%
V_{OS}	Zero-Code Offset Voltage					±28	µV
$t_{CONVERT}$	Conversion Time	(Note 6)			90		ms
Input Current Readback							
N	Resolution LSB Step Size	(Note 5) 8x Gain, 0V ≤ $\lvert V_{IN_SNS} - I_{IN_SNS} \rvert$ ≤ 8mV 4x Gain, 0V ≤ $\lvert V_{IN_SNS} - I_{IN_SNS} \rvert$ ≤ 20mV 2x Gain, 0V ≤ $\lvert V_{IN_SNS} - I_{IN_SNS} \rvert$ ≤ 50mV			10 15.26 30.52 61		Bits µV µV µV
I_{IN_TUE}	Total Unadjusted Error	8x Gain, V_{ISENSE} > 2.5mV (Note 8) 4x Gain, V_{ISENSE} > 4mV (Note 8) 2x Gain, V_{ISENSE} > 6mV (Note 8)	● ● ●			±1.6 ±1.3 ±1.2	% % %
V_{OS}	Zero-Code Offset Voltage				±50		µV
$t_{CONVERT}$	Conversion Time	(Note 6)			180		ms
Supply Current Readback							
N	Resolution LSB Step Size	(Note 5)			10 122		Bits µV
I_{CHIP_TUE}	Total Unadjusted Error (LTC3883 Only) Total Unadjusted Error (LTC3883-1 Only)		● ●			±5 ±200	% µA
$t_{CONVERT}$	Conversion Time	(Note 6)			180		ms
Duty Cycle Readback							
D_RES	Resolution	(Note 5)			10		Bits
D_TUE	Total Unadjusted Error	16.3% Duty Cycle		–3		3	%

ELECTRICAL CHARACTERISTICS

The ● denotes the specifications which apply over the specified operating junction temperature range, otherwise specifications are at T_J = 25°C (Note 2). V_{IN} = 12V, V_{RUN} = 3.3V, f_{SYNC} = 500kHz (externally driven) unless otherwise specified.

SYMBOL	PARAMETER	CONDITIONS		MIN	TYP	MAX	UNITS
$t_{CONVERT}$	Conversion Time	(Note 6)			90		ms
Temperature Readback (T0, T1)							
T_{RES_T}	Resolution				0.25		°C
T0_TUE	External TSNS TUE	ΔV_{TSNS} = 72mV (Note 8)	●			±3	°C
TI_TUE	Internal TSNS TUE	V_{RUN} = 0.0V, f_{SYNC} = 0kHz (Note 8)			±1		°C
$t_{CONVERT_T}$	Update Rate	(Note 6)			90		ms
$INTV_{CC}$ Regulator							
V_{INTVCC}	Internal V_{CC} Voltage No Load (LTC3883 Only)	6V < V_{IN} < 24V	●	4.8	5	5.2	V
V_{LDO_INT}	$INTV_{CC}$ Load Regulation (LTC3883 Only)	I_{CC} = 0mA to 50mA			0.5	±2	%
V_{DD33} Regulator							
V_{DD33}	Internal V_{DD33} Voltage	4.5V < V_{INTVCC}/V_{EXTVCC}	●	3.2	3.3	3.4	V
I_{LIM}	V_{DD33} Current Limit	V_{DD33} = GND, V_{IN} = $INTV_{CC}$ = 4.5V			100		mA
V_{DD33_OV}	V_{DD33} Overvoltage Threshold				3.5		V
V_{DD33_UV}	V_{DD33} Undervoltage Threshold				3.1		V
V_{DD25} Regulator							
V_{DD25}	Internal V_{DD25} Voltage		●	2.25	2.5	2.75	V
I_{LIM}	V_{DD25} Current Limit	V_{DD25} = GND, V_{IN} = $INTV_{CC}$ = 4.5V			80		mA
Oscillator and Phase-Locked Loop							
f_{OSC}	Oscillator Frequency Accuracy	250kHz < f_{SYNC} < 1MHz Measured Falling Edge-to-Falling Edge of SYNC with SWITCH_FREQUENCY = 250.0.and 1000.0	●			±7.5	%
$V_{TH,SYNC}$	SYNC Input Threshold	V_{CLKIN} Falling V_{CLKIN} Rising			1 1.5		V V
$V_{OL,SYNC}$	SYNC Low Output Voltage	I_{LOAD} = 3mA	●		0.2	0.4	V
$I_{LEAKSYNC}$	SYNC Leakage Current in Slave Mode	0V ≤ V_{PIN} ≤ 3.6V				±5	µA
SYNC-	SYNC to Channel Phase Relationship Based on the Falling Edge of Sync and Rising Edge of TG	MFR_PWM_CONFIG_LTC3883[2:0] = 0 MFR_PWM_CONFIG_LTC3883[2:0] = 1 MFR_PWM_CONFIG_LTC3883[2:0] = 2 MFR_PWM_CONFIG_LTC3883[2:0] = 3 MFR_PWM_CONFIG_LTC3883[2:0] = 4 MFR_PWM_CONFIG_LTC3883[2:0] = 5 MFR_PWM_CONFIG_LTC3883[2:0] = 6 MFR_PWM_CONFIG_LTC3883[2:0] = 7			0 90 180 270 60 120 240 300		Deg Deg Deg Deg Deg Deg Deg Deg
EEPROM Characteristics							
Endurance	(Note 13)	0°C < T_J < 85°C During EEPROM Write Operations	●	10,000			Cycles
Retention	(Note 13)	T_J < 125°C	●	10			Years
Mass_Write	Mass Write Operation Time	STORE_USER_ALL, 0°C < T_J ≤ 85°C During EEPROM Write Operations	●		440	4100	ms
Digital Inputs SCL, SDA, RUN, $\overline{GPIO}$							
V_{IH}	Input High Threshold Voltage	SCL, SDA, RUN, $\overline{GPIO}$, PGOOD	●			2.0	V
V_{IL}	Input Low Threshold Voltage	SCL, SDA, RUN, $\overline{GPIO}$, PGOOD	●	1.4			V
V_{HYST}	Input Hysteresis	SCL, SDA			0.08		V
C_{PIN}	Input Capacitance					10	pF
Digital Input WP							
I_{PUWP}	Input Pull-Up Current	WP			10		µA
Open-Drain Outputs SCL, SDA, $\overline{GPIO}$, $\overline{ALERT}$, RUN, SHARE_CLK, PGOOD							
V_{OL}	Output Low Voltage	I_{SINK} = 3mA	●			0.4	V

ELECTRICAL CHARACTERISTICS

The ● denotes the specifications which apply over the specified operating junction temperature range, otherwise specifications are at T_J = 25°C (Note 2). V_{IN} = 12V, V_{RUN} = 3.3V, f_{SYNC} = 500kHz (externally driven) unless otherwise specified.

SYMBOL	PARAMETER	CONDITIONS		MIN	TYP	MAX	UNITS
Digital Inputs SHARE_CLK, WP							
V_{IH}	Input High Threshold Voltage		●		1.5	1.8	V
V_{IL}	Input Low Threshold Voltage		●	0.6	1.0		V
Leakage Current SDA, SCL, $\overline{\text{ALERT}}$, RUN							
I_{OL}	Input Leakage Current	0V ≤ V_{PIN} ≤ 5.5V	●			±5	µA
Leakage Current $\overline{\text{GPIO}}$, PGOOD							
I_{GL}	Input Leakage Current	0V ≤ V_{PIN} ≤ 3.6V	●			±2	µA
Digital Filtering of $\overline{\text{GPIO}}$							
I_{FLTG}	Input Digital Filtering $\overline{\text{GPIO}}$				3		µs
Digital Filtering of RUN							
I_{FLTG}	Input Digital Filtering RUN				10		µs
PMBus Interface Timing Characteristics							
f_{SCL}	Serial Bus Operating Frequency		●	10		400	kHz
t_{BUF}	Bus Free Time Between Stop and Start		●	1.3			µs
$t_{HD,STA}$	Hold time After Repeated Start Condition. After this Period, the First Clock is Generated		●	0.6			µs
$t_{SU,STA}$	Repeated Start Condition Setup Time		●	0.6			µs
$t_{SU,STO}$	Stop Condition Setup Time		●	0.6			µs
$t_{HD,DAT}$	Data Hold Time Receiving Data Transmitting Data		 ● ●	 0 0.3		 0.9	 µs µs
$t_{SU,DAT}$	Data Setup Time Receiving Data		 ●	 0.1			 µs
$t_{TIMEOUT_SMB}$	Stuck PMBus Timer Non-Block Reads Stuck PMBus Timer Block Reads	Measured from the Last PMBus Start Event			32 150		ms ms
t_{LOW}	Serial Clock Low Period		●	1.3		10000	µs
t_{HIGH}	Serial Clock High Period		●	0.6			µs

Note 1: Stresses beyond those listed under Absolute Maximum Ratings may cause permanent damage to the device. Exposure to any Absolute Maximum Rating condition for extended periods may affect device reliability and lifetime.

Note 2: The LTC3883/LTC3883-1 are tested under pulsed load conditions such that $T_J \approx T_A$. The LTC3883E/LTC3883E-1 are guaranteed to meet performance specifications from 0°C to 85°C. Specifications over the –40°C to 105°C operating junction temperature range are assured by design, characterization and correlation with statistical process controls. The LTC3883I/LTC3883I-1 are guaranteed over the full –40°C to 125°C operating junction temperature range. T_J is calculated from the ambient temperature, T_A, and power dissipation, P_D, according to the following formula:

$$T_J = T_A + (P_D \bullet \theta_{JA})$$

The maximum ambient temperature consistent with these specifications is determined by specific operating conditions in conjunction with board layout, the rated package thermal impedance and other environmental factors.

Note 3: All currents into device pins are positive; all currents out of device pins are negative. All voltages are referenced to ground unless otherwise specified.

Note 4: Rise and fall times are measured using 10% and 90% levels. Delay times are measured using 50% levels.

Note 5: The data format in PMBus is 5 bits exponent (signed) and 11 bits mantissa (signed). This limits the output resolution to 10 bits though the internal ADC is 16 bits and the calculations use 32-bit words.

Note 6: The data conversion is done in round robin fashion. All inputs signals are continuously converted for a typical latency of 90ms.

Note 7: The IOUT_CAL_GAIN = 1.0mΩ and MFR_IOUT_TC = 0.0. Value as read from READ_IOUT in amperes.

Note 8: Part tested with PWM disabled. Evaluation in application demonstrates capability. TUE (%) = ADC Gain Error (%) + 100 • [Zero Code Offset + ADC Linearity Error]/Actual Value.

Note 9: All V_{OUT} commands assume the ADC is used to auto-zero the output to achieve the stated accuracy. LTC3883 is tested in a feedback loop that servos V_{OUT} to a specified value.

Note 10: The maximum V_{OUT} voltage is 5.5V.

Note 11: The maximum V_{IN} voltage is 28V.

Note 12: When V_{IN} < 6V, $INTV_{CC}$ must be tied to V_{IN}.

Note 13: EEPROM endurance is guaranteed by design, characterization and correlation with statistical process controls. Data retention is production tested via a high temperature bake at wafer level.The minimum retention specification applies for devices whose EEPROM has been cycled

ELECTRICAL CHARACTERISTICS

less than the minimum endurance specification. The RESTORE_USER_ALL command (NVM read) is valid over the entire operating temperature range.

Note 14: The LTC3883-1 quiescent current (I_Q) equals the I_Q of V_{IN} plus the I_Q of $EXTV_{CC}$.

Note 15: The LTC3883 includes overtemperature protection that is intended to protect the device during momentary overload conditions. Junction temperature will exceed 125°C when overtemperature protection is active. Continuous operation above the specified maximum operating junction temperature may impair device reliability.

TYPICAL PERFORMANCE CHARACTERISTICS

Efficiency vs Load Current, V_{OUT} = 1.8V (LTC3883)

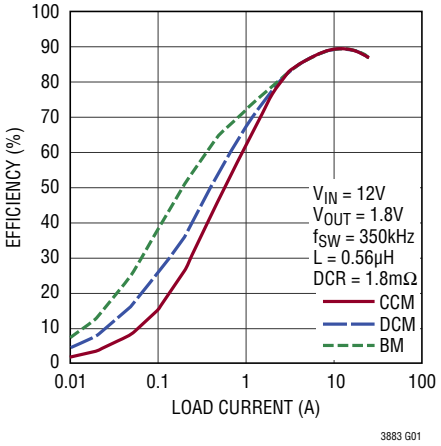

Efficiency vs Load Current, V_{OUT} = 3.3V (LTC3883)

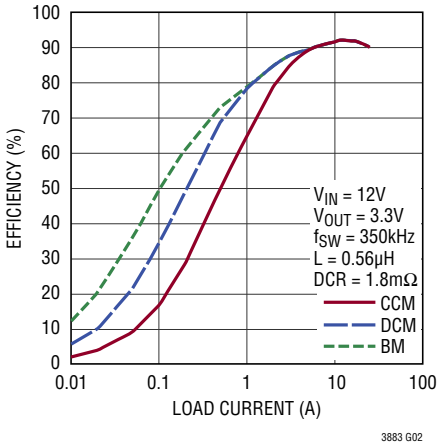

Efficiency and Power Loss vs Input Voltage (LTC3883)

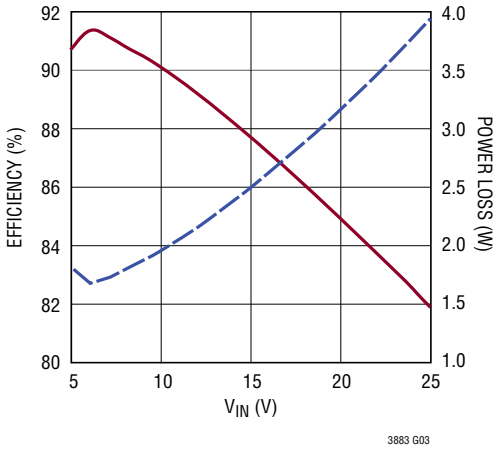

Load Step (Burst Mode Operation)

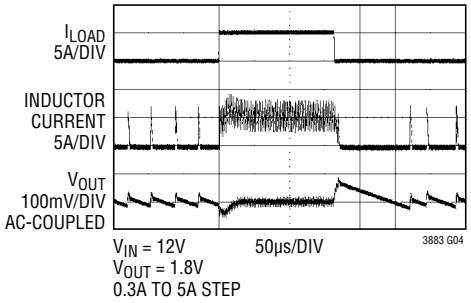

Load Step (Forced Continuous Mode)

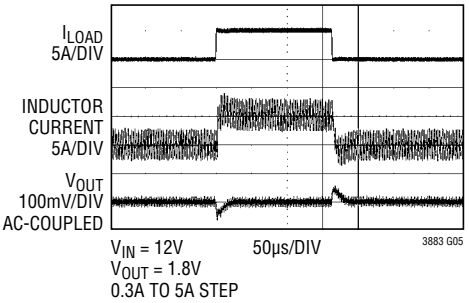

Load Step (Pulse-Skipping Mode)

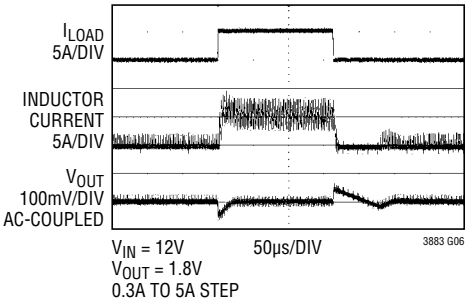

Inductor Current at Light Load

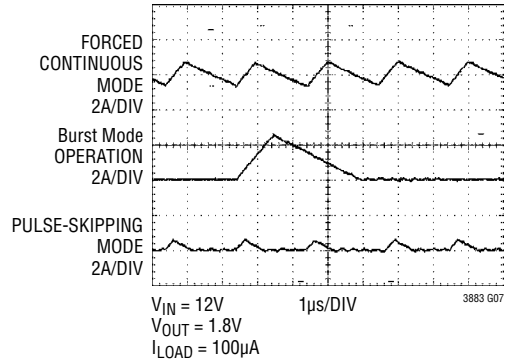

Start-Up into a Pre-Biased Load

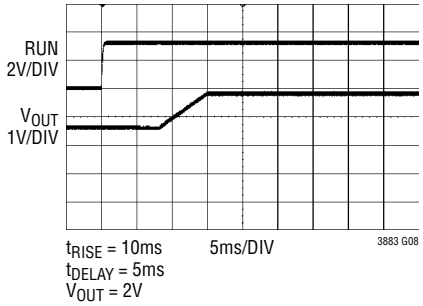

Soft-Start Ramp

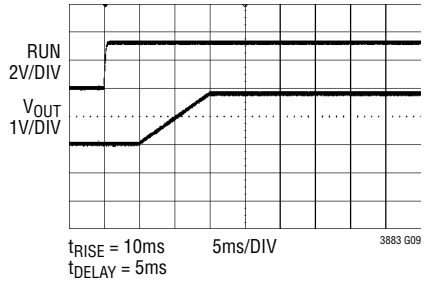

TYPICAL PERFORMANCE CHARACTERISTICS

Soft-Off Ramp

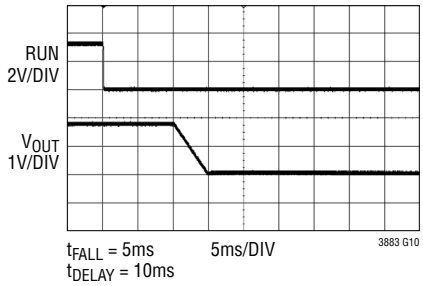

Current Sense Threshold vs I_{TH} Voltage (Low Range)

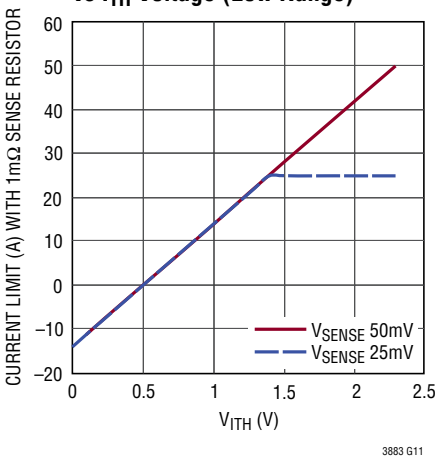

Maximum Current Sense Threshold vs Duty Cycle, V_{OUT} = 0V

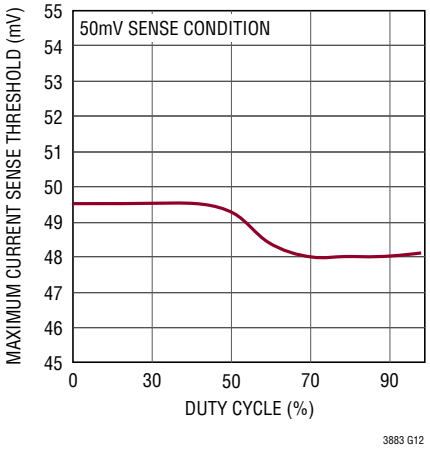

Maximum Current Sense Threshold vs Common Mode Voltage

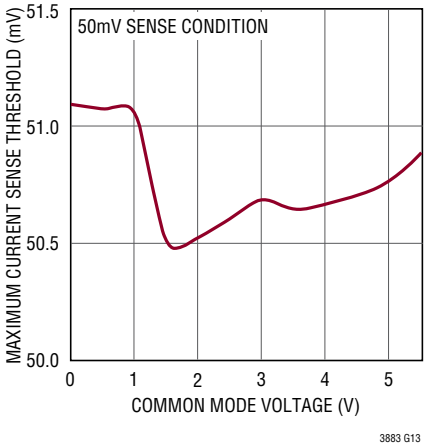

Regulated Output vs Temperature

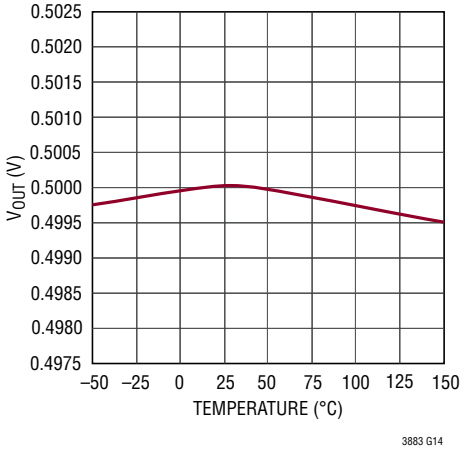

SHARE_CLK Frequency vs Temperature

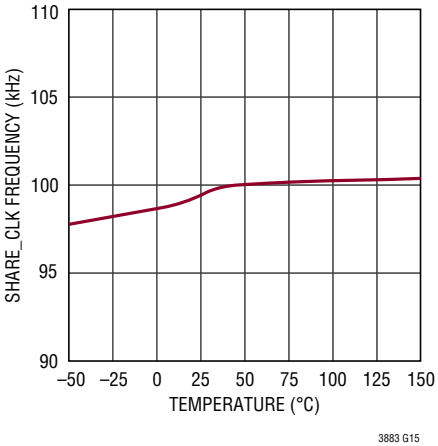

SHARE-CLK Frequency vs V_{IN}

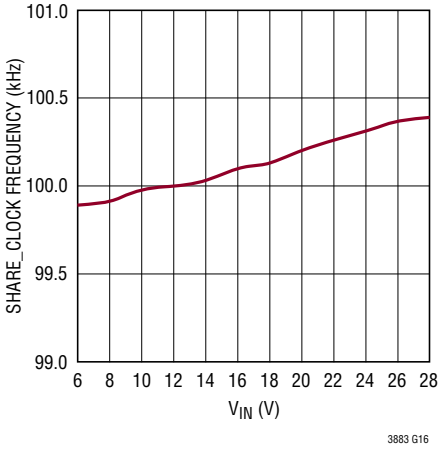

Quiescent Current vs Temperature

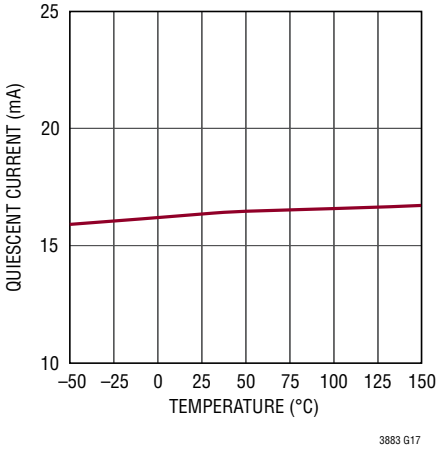

V_{OUT} Measurement Error vs V_{OUT}

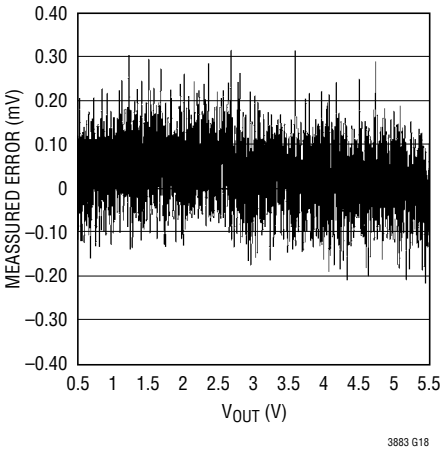

TYPICAL PERFORMANCE CHARACTERISTICS

V_{OUT} Command INL

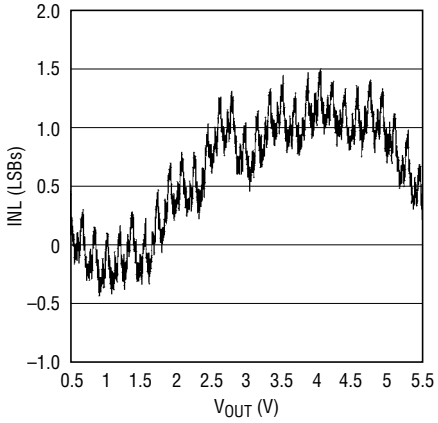

V_{OUT} Command DNL

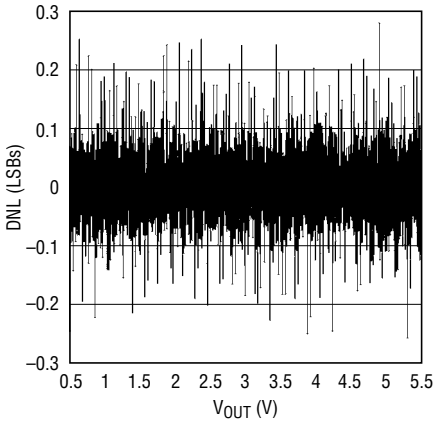

$INTV_{CC}$ Line Regulation

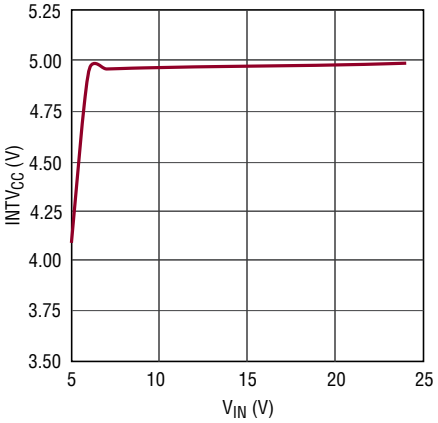

V_{OUT} OV Threshold vs Temperature (1V Target)

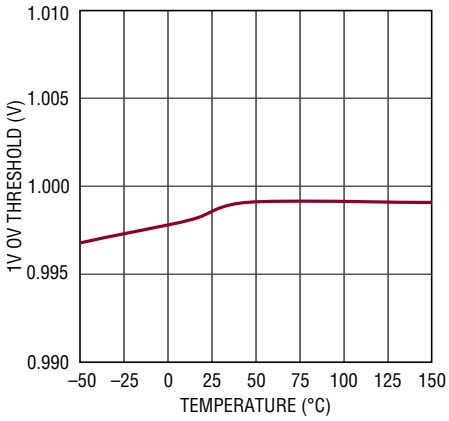

V_{OUT} OV Threshold vs Temperature (2V Target)

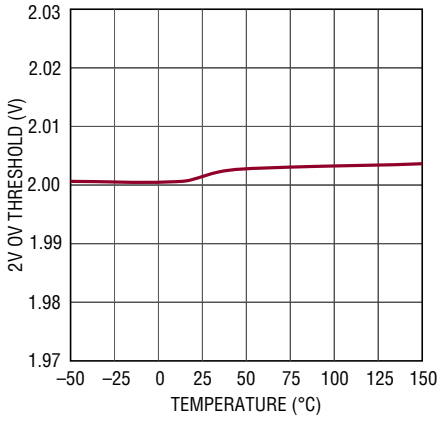

V_{OUT} OV Threshold vs Temperature (4V Target)

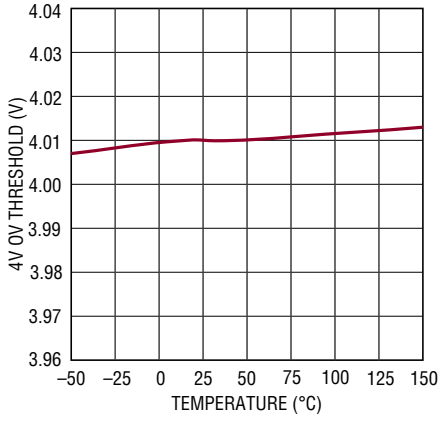

External Temperature Error vs Temperature

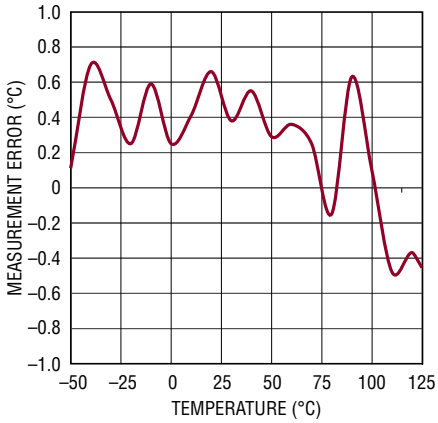

I_{OUT} Error vs I_{OUT} Room Temperature

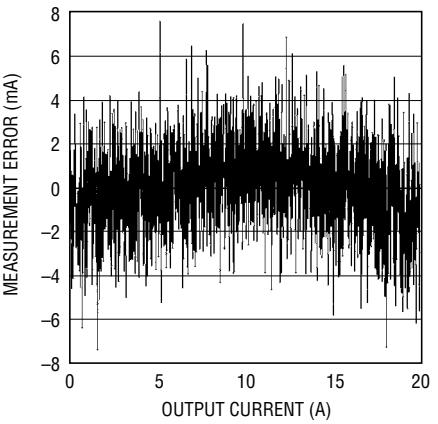

I_{IN} Error vs I_{IN} Room Temperature

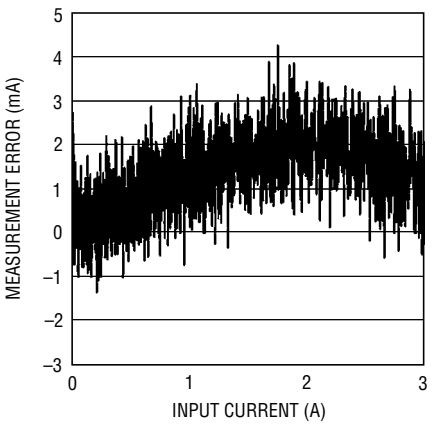

TYPICAL PERFORMANCE CHARACTERISTICS

DC Output Current Matching in a 2-Phase System (LTC3883)

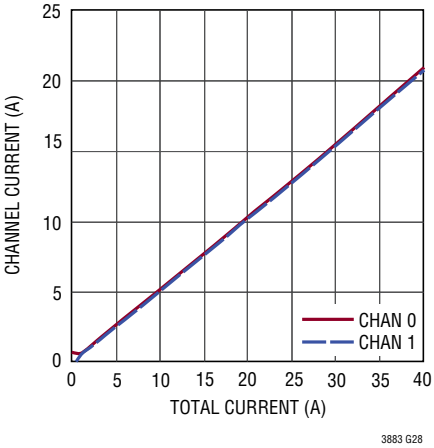

Dynamic Current Sharing During a Load Transient in a 2-Phase System

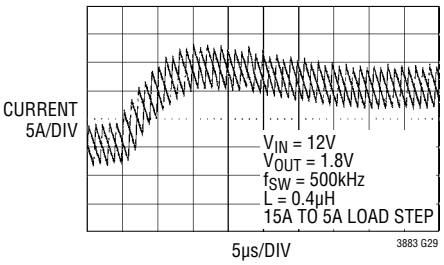

Dynamic Current Sharing During a Load Transient in a 2-Phase System

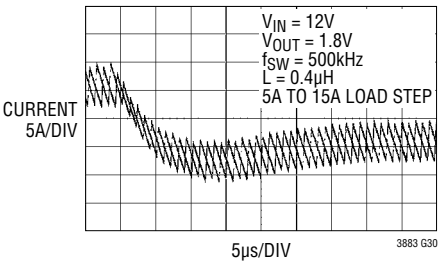

PIN FUNCTIONS

V_{IN_SNS} (Pin 1): Input Current Sense Comparator Input. The (–) input to the input current comparator is normally connected to the supply side of the input current sense resistor through a 100Ω resistor. If the input current sense amplifier is not used, this pin must be shorted to the I_{IN_SNS} and V_{IN} pins.

I_{IN_SNS} (Pin 2): Input Current Sense Comparator Input. The (+) input to the input current comparator is normally connected to the power stage side of the input current sense resistor through a 100Ω resistor. If the input current sense amplifier is not used, this pin must be shorted to the V_{IN_SNS} and V_{IN} pins.

I_{SENSE}^+ (Pin 3): Current Sense Comparator Input. The (+) input to the current comparator is normally connected to the DCR sensing network or current sensing resistor.

I_{SENSE}^- (Pin 4): Current Sense Comparator Input. The (–) input is connected to the output.

SYNC (Pin 5): External Clock Synchronization Input and Open-Drain Output Pin. If an external clock is present at this pin, the switching frequency will be synchronized to the external clock. If clock master mode is enabled, this pin will pull low at the switching frequency with a 500ns pulse width to ground. A resistor pull-up to 3.3V is required in the application.

SCL (Pin 6): Serial Bus Clock Input. A pull-up resistor to 3.3V is required in the application.

SDA (Pin 7): Serial Bus Data Input and Output. A pull-up resistor to 3.3V is required in the application.

$\overline{\text{ALERT}}$ (Pin 8): Open-Drain Digital Output. Connect the $\overline{\text{SMBALERT}}$ signal to this pin.

$\overline{\text{GPIO}}$ (Pin 9): Digital Programmable General Purpose Inputs and Outputs. Open-drain output.

PGOOD (Pin 10): Digital Power Good Indicator. Open-drain output.

RUN (Pin 11): Enable Run Input. Logic high on this pin enables the controller. This pin requires a resistor pull-up to 3.3V in the application and should be driven by an open-drain digital output.

DNC (Pins 12, 16): Do Not Connect to This Pin.

ASEL (Pin 13): Serial Bus Address Configuration Input. Connect a ±1% resistor divider between the chip V_{DD25} ASEL and GND in order to select the 4LSBs of the serial bus interface address. A resistor divider on ASEL is required if there are more than one LTC3883 on the same board to assure the user can independently program each IC. If the pin is left open, the IC will use the value programmed in the NVM. Minimize capacitance when the pin is open to assure accurate detection of the pin state.

PIN FUNCTIONS

FREQ_CFG (Pin 14): Frequency or Phase Set/Select Pin. Connect a ±1% resistor divider between the chip V_{DD25} FREQ_CFG and GND in order to select switching frequency or phase. If the pin is left open, the IC will use the value programmed in the NVM. Minimize capacitance when the pin is open to assure accurate detection of the pin state.

V_{OUT_CFG} (Pin 15): Output Voltage Select Pin. Connect a ±1% resistor divider between the chip V_{DD25}, V_{OUT_CFG} and SGND in order to select output voltage. This voltage can be adjusted with the V_{TRIM_CFG} pins. If the pin is left open, the IC will use the value programmed in the NVM. Minimize capacitance when the pin is open to assure accurate detection of the pin state.

V_{TRIM_CFG} (Pin 17): Voltage Trim Select Pin. Connect a ±1% resistor divider between the chip V_{DD25}, V_{TRIM_CFG} and SGND in order to adjust the output voltage set point. The V_{TRIM_CFG} settings in conjunction with the V_{OUT_CFG} setting adjusts the voltage set point. If the pin is left open, the IC will either not modify the V_{OUT_CFG} setting or use NVM. Minimize capacitance when the pin is open to assure accurate detection of the pin state.

V_{DD25} (Pin 18): Internally Generated 2.5V Power Supply Output. Bypass this pin to GND with a low ESR 1µF capacitor. Do not load this pin with external current.

WP (Pin 19): Write Protect Pin Active High. An internal 10µA current source pulls the pin to V_{DD33}. If WP is high, the PMBus writes are restricted.

SHARE_CLK (Pin 20): Share Clock, Bidirectional Open-Drain Clock Sharing Pin. Nominally 100kHz. Used to synchronize the timing between multiple LTC3883s. Tie all the SHARE_CLK pins together. All LTC3883s will synchronize to the fastest clock. An equivalent pull-up resistance of 5.49k to V_{DD33} is required.

V_{DD33} (Pin 21): Internally Generated 3.3V Power Supply Output. Bypass this pin to GND with a low ESR 1µF capacitor. Do not load this pin with external current.

SW (Pin 22): Switch Node Connection to the Inductor. Voltage swings at the pins are from a Schottky diode (external) voltage drop below ground to V_{IN}.

TG (Pin 23): Top Gate Driver Output. This is the output of the floating driver with a voltage swing equal to $INTV_{CC}$ superimposed on the switch node voltage.

BOOST (Pin 24): Boosted Floating Driver Supply. The (+) terminal of the booststrap capacitor connects to this pin. This pin swings from a diode voltage drop below $INTV_{CC}$ up to V_{IN} + $INTV_{CC}$.

PGND (Pin 25): Power Ground Pin. Connect this pin closely to the source of the bottom N-channel MOSFET, the (–) terminal of C_{INTVCC} and the (–) terminal of C_{IN}.

BG (Pin 26): Bottom Gate Driver Output. This pin drives the gates of the bottom N-channel MOSFET between PGND and $INTV_{CC}$.

$INTV_{CC}$ (Pin 27, LTC3883): Internal Regulator 5V Output. The control circuits are powered from this voltage. Decouple this pin to PGND with a minimum of 4.7µF low ESR tantalum or ceramic capacitor.

$EXTV_{CC}$ (Pin 27, LTC3883-1): External Regulator 5V input. The control circuits are powered from this voltage. Decouple this pin to PGND with a minimum of 4.7µF low ESR tantalum or ceramic capacitor.

V_{IN} (Pin 28): Main Input Supply. Decouple this pin to PGND with a capacitor (0.1µF to 1µF). For applications where the main input power is 5V, tie the V_{IN} and $INTV_{CC}$ pins together. If the input current sense amplifier is not used, this pin must be shorted to the V_{IN_SNS} and I_{IN_SNS} pins.

I_{TH} (Pin 29): Current Control Threshold and Error Amplifier Compensation Node. The current comparator tripping threshold increases with the I_{TH} voltage.

V_{SENSE}^+ (Pin 30): Positive Voltage Sense Input.

V_{SENSE}^- (Pin 31): Negative Voltage Sense Input.

TSNS (Pin 32): External Diode Temperature Sense. Connect to the anode of a diode-connected PNP transistor and star connect the cathode to GND in order to sense remote temperature. If an external temperature sense element is not installed, short pin to ground and set the UT_FAULT_LIMIT to –275°C, set the UT_FAULT_RESPONSE to ignore, and set IOUT_CAL_GAIN_TC to 0.

GND (Exposed Pad Pin 33): Ground. All small-signal and compensation components should connect to this ground, which in turn connects to PGND at one point.

BLOCK DIAGRAM

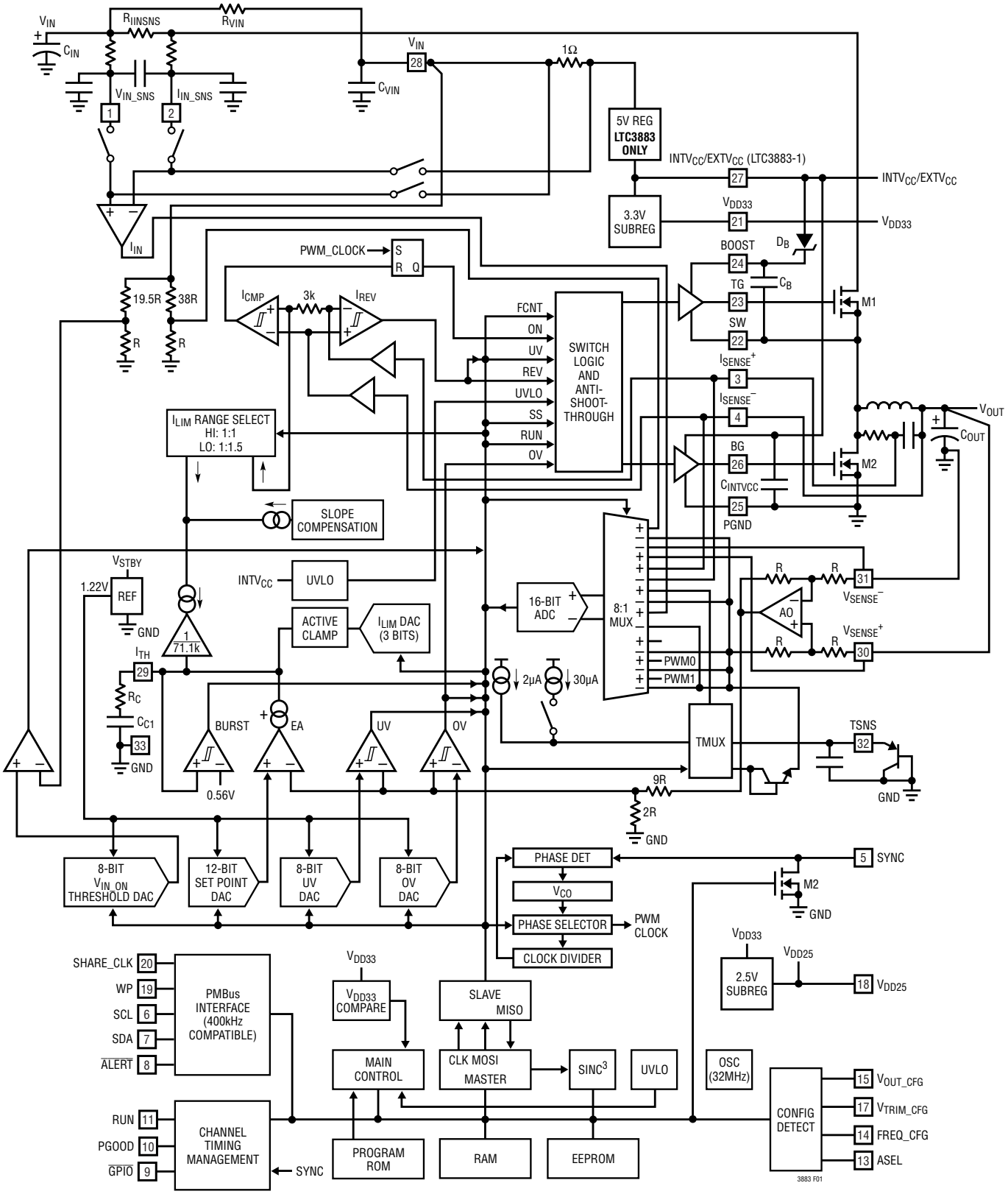

Figure 1. Block Diagram

OPERATION

OVERVIEW

The LTC3883 is a constant frequency, analog current mode controller for DC/DC step-down applications with a digital interface. The LTC3883 digital interface is compatible with PMBus which supports bus speeds of up to 400kHz. A typical application circuit is shown on the first page of this data sheet.Major features include:

- Programmable Output Voltage
- Programmable Input Voltage Comparator
- Programmable Current Limit
- Programmable Switching Frequency
- Programmable OV and UV Comparators
- Programmable On and Off Delay Times
- Programmable Output Rise/Fall Times
- Phase-Locked Loop for Synchronous, Polyphase Operation (2, 3, 4 or 6 Phases)
- Input and Output Voltage/Current, Temperature and Duty Cycle Telemetry
- Fully Differential Load Sense
- Integrated Gate Drivers
- Non-Volatile Configuration Memory
- Optional External Configuration Resistors for Key Operating Parameters
- Optional Time-Base Interconnect for Synchronization Between Multiple Controllers
- Fault Logging
- WP Pin to Protect Internal Configuration
- Standalone Operation After User Factory Configuration
- PMBus, 400kHz Compliant Interface

The PMBus interface provides access to important power management data during system operation including:

- Internal Controller Temperature
- External System Temperature via Optional Diode Sense Elements
- Average Output Current
- Average PWM Duty Cycle
- Average Output Voltage
- Average Input Voltage
- Average Input Current
- Configurable, Latched and Unlatched Individual Fault and Warning Status

Fault reporting and shutdown behavior are fully configurable using the GPIO output ($\overline{GPIO}$). A dedicated pin for $\overline{ALERT}$ is provided. The shutdown operation also allows all faults to be individually masked and can be operated in either unlatched (hiccup) or latched modes.

Individual status commands enable fault reporting over the serial bus to identify the specific fault event. Fault or warning detection includes the following:

- Output Undervoltage/Overvoltage
- Input Undervoltage/Overvoltage
- Input and Output Overcurrent
- Internal Overtemperature
- External Overtemperature
- Communication, Memory or Logic (CML) Fault

MAIN CONTROL LOOP

The LTC3883 is a constant frequency, current mode step-down controller that operates at a user-defined relative phasing. During normal operation the top MOSFET is turned on when the clock for that channel sets the RS latch, and turned off when the main current comparator, I_{CMP}, resets the RS latch. The peak inductor current at which I_{CMP} resets the RS latch is controlled by the voltage on the I_{TH} pin which is the output of the error amplifier, EA. The EA negative terminal is equal to the V_{SENSE} voltage divided by 5.5 (2.75 if range = 1). The positive terminal of the EA is connected to the output of a 12-bit DAC with values ranging from 0V to 1.024V. The output voltage, through feedback of the EA, will be regulated to 5.5 times the DAC output (2.75 times if range = 1). The DAC value is calculated by the part to synthesize the users desired output voltage. The output voltage is programmed by the user either

OPERATION

with the resistor configuration pins detailed in Tables 12 and 13 or by the V_{OUT} command (either from NVM or by PMBus command). Refer to the PMBus command section of the data sheet or the PMBus specification for more details. The output voltage can be modified by the user at any time with a PMBus VOUT_COMMAND. This command will typically have a latency less than 10ms. The user is encouraged to reference the PMBus Power System Management Protocol Specification to understand how to program the LTC3883. This specification can be found at http://www.pmbus.org/specs.html.

Continuing the basic operation description, the current mode controller will turn off the top gate when the peak current is reached. If the load current increases, V_{SENSE} will slightly droop with respect to the DAC reference. This causes the I_{TH} voltage to increase until the average inductor current matches the new load current. After the top MOSFET has turned off, the bottom MOSFET is turned on. In continuous conduction mode, the bottom MOSFET stays on until the end of the switching cycle.

EEPROM

The LTC3883 contains internal EEPROM (nonvolatile memory) to store configuration settings and fault log information. EEPROM endurance retention and mass write operation time are specified in the Electrical Characteristics and Absolute Maximum Ratings sections. Write operations above T_J = 85°C or below 0°C are possible although the Electrical Characteristics are not guaranteed and the EEPROM will be degraded. Read operations performed at temperatures between 85°C and 125°C will not degrade the EEPROM. Writing to the EEPROM above 85°C will result in a degradation of retention characteristics. The fault logging function, which is useful in debugging system problems that may occur at high temperatures, only writes to fault log EEPROM locations. If occasional writes to these registers occur above 85°C, the slight degradation in the data retention characteristics of the fault log will not take away from the usefulness of the function.

It is recommended that the EEPROM not be written when the die temperature is greater than 85°C. If the die temperature exceeds 130°C, the LTC3883 will disable all EEPROM write operations. All EEPROM write operations will be re-enabled when the die temperature drops below 125°C. (The controller will also disable when the die temperature exceeds the internal overtemperature fault limit.)

The degradation in EEPROM retention for temperatures >125°C can be approximated by calculating the dimensionless acceleration factor using the following equation:

$$AF = e^{\left[\left(\frac{Ea}{k}\right)\bullet\left(\frac{1}{T_{USE}+273}-\frac{1}{T_{STRESS}+273}\right)\right]}$$

where:

AF = acceleration factor

Ea = activation energy = 1.4eV

$K = 8.617 \bullet 10^{-5}$ eV/°K

T_{USE} = 125°C specified junction temperature

T_{STRESS} = actual junction temperature in °C

Example: Calculate the effect on retention when operating at a junction temperature of 135°C for 10 hours.

T_{STRESS} = 130°C

T_{USE} = 125°C

$AF = e^{[(1.4/8.617 \bullet 10^{-5}) \bullet (1/398 - 1/403)]} = 1.66$

The equivalent operating time at 125°C = 16.6 hours.

Thus the overall retention of the EEPROM was degraded by 6.6 hours as a result of operating at a junction temperature of 130°C for 10 hours. The effect of the overstress is negligible when compared to the overall EEPROM retention rating of 87,600 hours at a maximum junction temperature of 125°C.

POWER UP AND INITIALIZATION

The LTC3883 is designed to provide standalone supply sequencing and controlled turn-on and turn-off operation. It operates from a single input supply (4.5V to 24V) while three on-chip linear regulators generate internal 2.5V, 3.3V and 5V. If V_{IN} is below 6V, the $INTV_{CC}$ and V_{IN} pins must be tied together. The controller configuration is initialized by an internal threshold based UVLO where V_{IN} must be approximately 4V and the 5V, 3.3V and 2.5V linear regulators must be within approximately 20% of the regulated values. The LTC3883-1 does not have an

OPERATION

internal 5V linear regulator. The $EXTV_{CC}$ pin is driven by an external regulator to improve efficiency of the circuit and minimize power on the LTC3883. The $EXTV_{CC}$ pin must exceed approximately 4V before the internal UVLO is exceeded. To minimize application power, the $EXTV_{CC}$ pin can be supplied by a switching regulator.

During initialization, the external configuration resistors are identified and/or contents of the NVM are read into the controller's commands. The BG, TG and RUN pins are held low. The $\overline{GPIO}$ pin is in high impedance mode. The LTC3883 will use the contents of Tables 12 to 15 to determine the resistor defined parameters. See the Resistor Configuration section for more detail. The resistor configuration pins only control some of the preset values of the controller. The remaining values are programmed in NVM either at the factory or by the user.

If the configuration resistors are not inserted or if the ignore RCONFIG bit is asserted (bit 6 of the MFR_CONFIG_ALL_LTC3883 configuration command), the LTC3883 will use only the contents of NVM to determine the DC/DC characteristics. The ASEL value read at power-up or reset is always respected unless the pin is open. The ASEL will use the MSB from NVM and the LSB from the detected threshold. See the Applications Information section for more detail.

After the part has initialized, an additional comparator monitors V_{IN}. The VIN_ON threshold must be exceeded before the output power sequencing can begin. After V_{IN} is initially applied, the part will typically require 130ms to initialize and begin the TON_DELAY timer. The readback of voltages and currents may require an additional 90ms.

SOFT-START

The part must enter the run state prior to soft-start. The run pin is released by the LTC3883 after the part initializes and V_{IN} is greater than the VIN_ON threshold. If multiple LTC3883s are used in an application, they all hold their respective run pins low until all devices initialize and V_{IN} exceeds the VIN_ON threshold for every device. The SHARE_CLK pin assures all the devices connected to the signal use the same time base. The SHARE_CLK pin is held low until the part has initialized after V_{IN} is applied. The LTC3883 can be set to turn off (or remain off) if SHARE_CLK is low (set bit 2 of MFR_CHAN_CONFIG_LTC3883 to a 1). This allows the user to assure synchronization across numerous LTC ICs even if the RUN pins can not be connected together due to board constraints. In general, if the user cares about synchronization between chips it is best to connect all the respective RUN pins together and to connect all the respective SHARE_CLK pins together and pull up to V_{DD33} with a 10k resistor. This assures all chips begin sequencing at the same time and use the same time base.

After the RUN pin releases and prior to entering a constant output voltage regulation state, the LTC3883 performs a monotonic initial ramp or "soft-start". Soft-start is performed by actively regulating the load voltage while digitally ramping the target voltage from 0V to the commanded voltage set-point. Once the LTC3883 is commanded to turn on, (after power up and initialization) the controller waits for the user specified turn-on delay (TON_DELAY) prior to initiating this output voltage ramp. The rise time of the voltage ramp can be programmed using the TON_RISE command to minimize inrush currents associated with the start-up voltage ramp. The soft-start feature is disabled by setting the value of TON_RISE to any value less than 0.25ms. The LTC3883 PWM always uses discontinuous mode during the TON_RISE operation. In discontinuous mode, the bottom gate is turned off as soon as reverse current is detected in the inductor. This will allow the regulator to start up into a pre-biased load. When the TON_MAX_FAULT_LIMIT is reached, the part transitions to continuous mode or burst, if so programmed. If TON_MAX_FAULT_LIMIT is set to zero, there is no time limit and the part transitions to the desired conduction mode after TON_RISE completes and V_{OUT} has exceeded the VOUT_UV_FAULT_LIMIT and IOUT_OC is not present. Setting TON_MAX_FAULT_LIMIT to a value of 0 is not recommended. This described method of start-up sequencing is time based.

SEQUENCING

The default mode for sequencing the output on and off is time based. The output is enabled after waiting TON_DELAY amount of time following either the RUN pin going high, a

OPERATION

PMBus command to turn on, or the V_{IN} pin voltage rising above a preprogrammed voltage. Off sequencing is handled in a similar way. To assure proper sequencing, make sure all ICs connect the SHARE_CLK pins together and RUN pins together. If the RUN pins can not be connected together for some reason, set bit 2 of MFR_CHAN_CONFIG_LTC3883 to a 1. This bit requires the SHARE_CLK pin to be clocking before the power supply output can start. When the RUN pin is pulled low, the LTC3883 will hold the pin low for the MFR_RESTART_DELAY. The minimum MFR_RESTART_DELAY is TOFF_DELAY + TOFF_FALL + 136ms. This delay assures proper sequencing of all rails. The LTC3883 calculates this delay internally and will not process a shorter delay. However, a longer commanded MFR_RESTART_DELAY will be used by the part. The maximum allowed value is 65.52 seconds.

VOLTAGE-BASED SEQUENCING

The $\overline{GPIO}$ pin can be asserted when the UV threshold is exceeded. It is possible to feed the $\overline{GPIO}$ pin from one LTC3883 into the RUN pin of the next LTC3883 in the sequence. To use the $\overline{GPIO}$ pin for voltage based sequencing, set bit 12 of the MFR_GPIO_PROPAGATE_LTC3883 command = 1. Bit 12 is the VOUT_UVUF which is the deglitched VOUT_UV comparator. Using the deglitched VOUT_UV fault limit is recommended because there is little appreciable time delay between the comparator crossing the UV threshold and the $\overline{GPIO}$ pin releasing This can be implemented across multiple LTC3883s. The VOUT_UVUF has a 250µs minimum pulse width filter. If the GPIO_FAULT_RESPONSE command is not set to ignore, the part will latch off and never be able to start. If the V_{OUT} voltage bounces around the UV threshold for a long period of time it is possible for the $\overline{GPIO}$ output to toggle more than once. To minimize this problem, set the TON_RISE time under 100ms. If a fault in the string of rails is detected, only the faulted rail and downstream rails will fault off. The rails in the string of devices in front of the faulted rail will remain on unless commanded off.

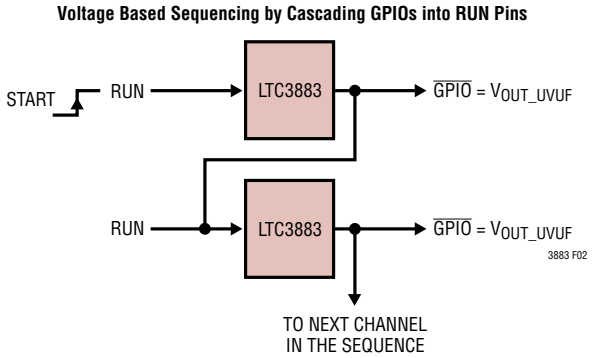

Figure 2. Event (Voltage) Based Sequencing

SHUTDOWN

The LTC3883 supports two shutdown modes. The first mode is closed-loop shutdown response, with user-defined turn-off delay (TOFF_DELAY) and ramp down rate (TOFF_FALL). The controller will maintain the mode of operation for TOFF_FALL. In discontinuous conduction mode, the controller will not draw current from the load and the fall time will be set by the output capacitance and load current.

The other shutdown mode occurs in response to a fault condition or loss of SHARE_CLK (if bit 2 of MFR_CHAN_CONFIG_LTC3883 is set to a 1) or V_{IN} falling below the VIN_OFF threshold or $\overline{GPIO}$ pulled low externally (if the MFR_GPIO_RESPONSE is set to inhibit). Under these conditions the power stage is disabled in order to stop the transfer of energy to the load as quickly as possible. The shutdown state can be entered from the soft-start or active regulation states either through user intervention (deasserting RUN or the PMBus OPERATION command) or in response to a detected fault or an external fault via the bidirectional $\overline{GPIO}$ pin, or loss of SHARE_CLK (if bit 2 of MFR_CHAN_CONFIG_LTC3883 is set to a 1) or V_{IN} falling below the VIN_OFF threshold.

In hiccup mode, the controller responds to a fault by shutting down and entering the inactive state for a programmable delay time (MFR_RETRY_DELAY). This delay minimizes the duty cycle associated with autonomous retries if the fault that caused the shutdown disappears once the output is disabled. The retry delay time is determined by the longer of the MFR_RETRY_DELAY command or the time required for the regulated output to decay below 12.5% of the programmed value. If multiple outputs are controlled by the same $\overline{GPIO}$ pin, the decay time of the faulted output determines the retry

OPERATION

delay. If the natural decay time of the output is too long, it is possible to remove the voltage requirement of the MFR_RETRY_DELAY command by asserting bit 0 of MFR_CHAN_CONFIG_LTC3883. Alternatively, the controller can be configured so that it remains latched-off following a fault and clearing requires user intervention such as toggling RUN or commanding the part OFF then ON.

LIGHT LOAD CURRENT OPERATION

The LTC3883 has three modes of operation including high efficiency Burst Mode operation, discontinuous conduction mode or forced continuous conduction mode. Mode selection is done using the MFR_PWM_MODE_LTC3883 command (discontinuous conduction is always the start-up mode, forced continuous is the default running mode).

In Burst Mode operation the peak current in the inductor is set to approximately one-third of the maximum sense voltage even though the voltage on the I_{TH} pin indicates a lower value. If the average inductor current is higher than the load current, the error amplifier, EA, will decrease the voltage on the I_{TH} pin. When the I_{TH} voltage drops below approximately 0.5V, the internal Burst Mode operation asserts and both external MOSFETS are turned off. In Burst Mode operation, the load current is supplied by the output capacitor. As the output voltage decreases, the EA output begins to rise. When the output voltage drops sufficiently, Burst Mode operation is deasserted, and the controller resumes normal operation by turning on the top external MOSFET on the next PWM cycle.

If a controller is enabled for Burst Mode operation, the inductor current is not allowed to reverse. The reverse current comparator, I_{REV}, turns off the bottom gate external MOSFET just before the inductor current reaches zero, preventing it from reversing and going negative. Thus, the controller can operate in discontinuous operation. In forced continuous operation, the inductor current is allowed to reverse at light loads or under large transient conditions. The peak inductor current is determined solely by the voltage on the I_{TH} pin. In this mode, the efficiency at light loads is lower than in Burst Mode operation. However, continuous mode exhibits lower output ripple and less interference with audio circuitry. Forced continuous conduction mode may result in reverse inductor current, which can cause the input supply to boost. The VIN_OV_FAULT_LIMIT can detect this and turn off the offending channel. However, this fault is based on an ADC read and can take up to 90ms to detect. If there is a concern about the input supply boosting, keep the part in discontinuous conduction or Burst Mode operation.

If the part is set to Burst Mode operation, as the inductor average current increases, the controller will automatically modify the operation from Burst Mode operation, to discontinuous mode to continuous mode.

SWITCHING FREQUENCY AND PHASE

The switching frequency of the LTC3883's controller can be established with internal clock references or with an external time-base. The LTC3883 can be configured for an external clock input through the programmed value in NVM, a PMBus command or setting the R_{BOTTOM} resistor of the FREQ_CFG pin to 0Ω and the R_{TOP} to open. The PMBus command FREQUENCY_SWITCH is set to external clock. The MFR_PWM_CONFIG_LTC3883 command determines the relative phasing. The RCONFIG input can set the relative phasing with respect to the falling edge of SYNC. The master should be selected to be out of phase with the slave. The RUN pin must be low before the FREQUENCY and MFR_PWM_CONFIG_LTC3883 commands can be written to the LTC3883. The relative phasing of all devices in a PolyPhase rail should be optimally phased. The relative phasing of each rail is 360/n where n is the number of phases in the rail.

If the LTC3883 is configured as the oscillator output on SYNC, the switching frequency source can be selected with either external configuration resistors or through serial bus programming. The FREQ_CFG configuration resistor pin can be used to select the FREQUENCY_SWITCH and MFR_PWM_CONFIG_LTC3883 values as outlined in Table 14. Otherwise, the FREQUENCY_SWITCH and MFR_PWM_CONFIG_LTC3883 PMBus commands can be used to select PWM switching frequency and the PWM channel phase relationship. The phase and frequency relationships are completely independent of each other providing the numerous application options for the user. If the LTC3883 is configured to drive the SYNC pin using the programmed FREQUENCY_SWITCH command value,

OPERATION

the SYNC pin will pull low at the desired clock rate with 500ns low pulse. Care must be taken in the application to assure the capacitance on SYNC is minimized to assure the pull-up resistor versus the capacitor load has a low enough time constant for the application. In addition, a phase-locked loop (PLL) is available to synchronize the internal oscillator to an external clock source that is connected to the SYNC pin. All phase relationships are between the falling edge of SYNC and the rising edge of the LTC3883 TG output. Multiple LTC3883s can be synchronized in order to realize PolyPhase arrays.

OUTPUT VOLTAGE SENSING

The differential amplifier allows remote, differential sensing of the load voltage with V_{SENSEn} pins. The telemetry ADC is fully differential and makes measurements of the output voltage at the V_{SENSEn} pins.

OUTPUT CURRENT SENSING

For DCR current sense applications, a resistor in series with a capacitor is placed across the inductor. In this configuration, the resistor is tied to the FET side of the inductor while the capacitor is tied to the load side of the inductor as shown in Figure 3. If the RC values are chosen such that the RC time constant matches the inductor time constant (L/DCR, where DCR is the inductor series resistance), the resultant voltage (V_{DCR}) appearing across the capacitor will equal the voltage across the inductor series resistance and thus represent the current flowing through the inductor. The RC calculations are based on the room temperature DCR of the inductor.

The RC time constant should remain constant, as a function of temperature. This assures the transient response of the circuit is the same regardless of the temperature. The DCR of the inductor has a large temperature coefficient, approximately 3900ppm/°C. The temperature coefficient of the inductor must be written to the MFR_IOUT_CAL_GAIN_TC command. The external temperature is sensed near the inductor and is used to modify the internal current limit circuit to maintain an essentially constant current limit with temperature. In this application, the I_{SENSE}^+ pin is connected to the FET side of the capacitor while the I_{SENSE}^- pin is placed on the load side of the capacitor.

The current sensed from the input is then given by the expression V_{DCR}/DCR. V_{DCR} is digitized by the LTC3883's telemetry ADC with an input range of ±128mV, a noise floor of 7μV_{RMS}, and a peak-peak noise of approximately 46.5μV. The LTC3883 computes the inductor current using the DCR value stored in the IOUT_CAL_GAIN command and the temperature coefficient stored in command MFR_IOUT_CAL_GAIN_TC. The resulting current value is returned by the READ_IOUT command.

AUTO CALIBRATION

Using a patent pending auto-calibration routine, the LTC3883 can measure the actual DC resistance for DCR current sense applications. The measured value is used in READ_IOUT measurements and eliminates the need for the user to know the actual resistance of the inductor. Reference the subsection titled Inductor DCR Calibration in the Applications Information section for further detail.

ACCURATE DCR TEMPERATURE COMPENSATION

The LTC3883 uses a patent pending algorithm to dynamically model the temperature rise from the external temperature sensor to the inductor core. Refer to the Accurate DCR Temperature Compensation subsection in the Applications Information section for complete details.

INPUT CURRENT SENSING

To sense the total input current consumed by the LTC3883 and the power stage, a resistor is placed between the supply voltage and the drain of the top N-channel MOSFET. The V_{IN_SNS} and I_{IN_SNS} pins are connected to the sense resistor through 100Ω filter resistors. Both pins need to be decoupled to GND. A filter capacitor needs to be connected across the V_{IN_SNS} and I_{IN_SNS} pins. Refer to Figure 25, Low Noise Input Current Sense Circuit for further details. The filtered voltage is amplified by the internal high side current sense amplifier and digitized by the LTC3883's telemetry ADC. The input current sense amplifier has three gain settings of 2x, 4x, and 8x set by the bits 5:4 of the MFR_PWM_MODE command. The maximum input sense voltage for the three gain settings is 50mV, 20mV, and 8mV respectively. The LTC3883 computes the input current using the R value stored in the IIN_CAL_GAIN

OPERATION

command. The resulting measured powerstage current is returned by the READ_IIN command.

The MFR_READ_IIN_CHAN command returns the calculated powerstage current based on the READ_IOUT value multiplied by the READ_DUTY_CYCLE value.

The LTC3883 uses an internal 1Ω sense resistor to measure the V_{IN} pin supply current being consumed by the LTC3883. This value is returned by the MFR_READ_ICHIP command. Refer to the subsection titled Input Current Sense Amplifier in the Applications Information section for further detail.

LOAD SHARING

Multiple LTC3883's can be arrayed in order to provide a balanced load-share solution by bussing the necessary pins. Figure 3 illustrates the shared connections required for load sharing.

The frequency must only be programmed on one of the LTC3883s. The other(s) must be programmed to External Clock.

EXTERNAL/INTERNAL TEMPERATURE SENSE

External temperature can be best measured using a remote diode-connected PNP transistor such as the MMBT3906. The emitter should be connected to the TSNS pin while the base and collector terminals of the PNP transistor should be returned to the LTC3883's GND pin, preferably using a star connection. It is possible to connect the collector of the PNP to the source of the bottom MOSFET. This may optimize board layout allowing the PNP closer proximity to the power FETs. The base of the PNP must still be tied to ground. For best noise immunity, the connections should be routed differentially and a 10nF capacitor should be placed in parallel with the diode connected PNP. Two different currents are applied to the diode (nominally 2µA and 32µA) and the

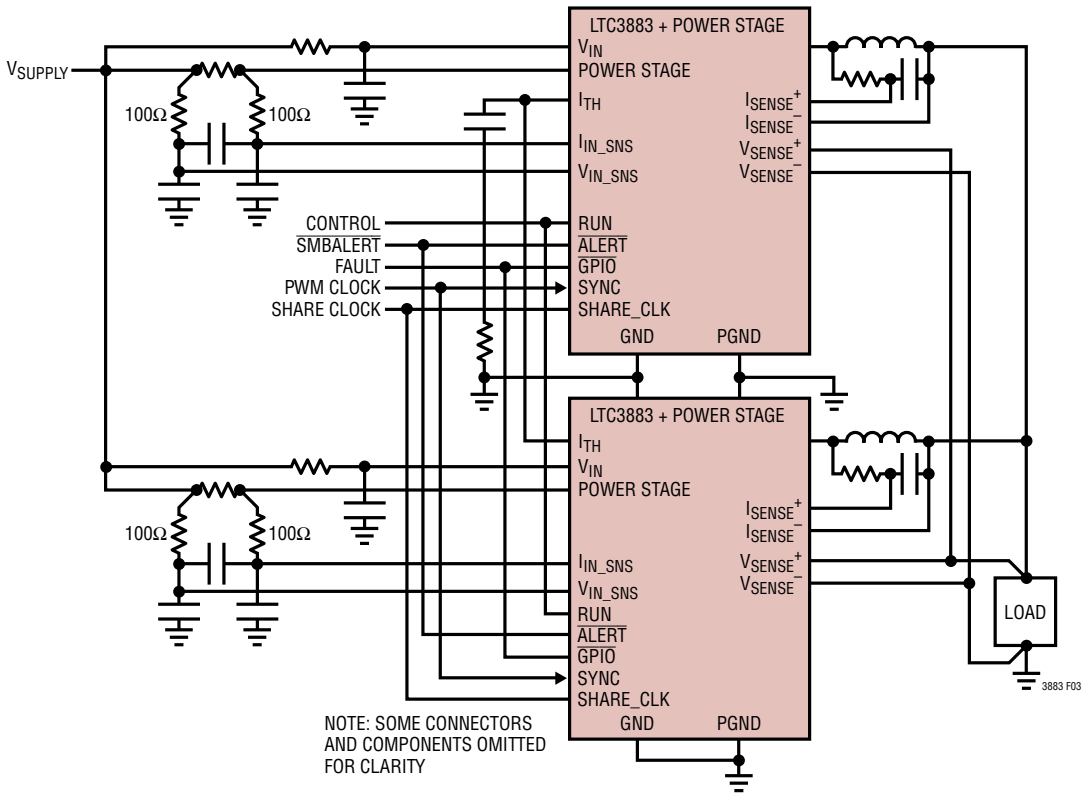

Figure 3. Load Sharing Connections for 2-Phase Operation

OPERATION

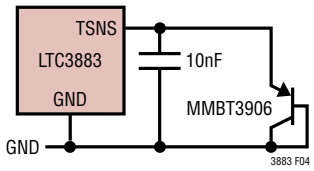

Figure 4. Temperature Sense Circuit

temperature is calculated from the ΔV_{BE} measurement. The external transistor temperature is digitized by the telemetry ADC, and the value is returned by the PMBus READ_TEMPERATURE_1 command.

The READ_TEMPERATURE_2 command returns the junction temperature of the LTC3883 using an on-chip diode. The slope of the external temperature sensor can be modified with the temperature slope coefficient stored in MFR_TEMP_1_GAIN. Typical PNPs require temperature slope adjustments slightly less than 1. The MMBT3906 has a recommended value in this command of approximately MFR_TEMP_1_GAIN = 0.991 based on the ideality factor of 1.01. Simply invert the ideality factor to calculate the MFR_TEMP_1_GAIN. Different manufacturers and different lots may have different ideality factors. Consult with the manufacturer to set this value.

The offset of the external temperature sense can be adjusted by MFR_TEMP_1_OFFSET. A value of 0 in this command sets the temperature offset to –273.15°C.

If the PNP cannot be placed in direct contact with the inductor, the slope or offset can be increased to account for temperature mismatches. If the user is adjusting the slope, the intercept point is at absolute zero, –273.15°C, so small adjustments in slope can change the apparent measured temperature significantly. Another way to artificially increase the slope of the temperature term is to increase the MFR_IOUT_CAL_GAIN_TC term. This will modify the temperature slope with respect to room temperature.

If an external temperature sense element is not used, the TSNS pin must be shorted to GND. The UT_FAULT_LIMIT must be set to –275°C, and the UT_FAULT_RESPONSE must be set to ignore. The user also needs to set the IOUT_CAL_GAIN_TC to a value of 0.

RCONFIG (RESISTOR CONFIGURATION) PINS

The pins FREQ_CFG, VOUT_CFG and VTRIM_CFG can be used to select important operating parameters without programming the configuration EEPROM. Connecting these pins to external resistor dividers selects the switching frequency, output voltage and basic power management supervisor parameters. The ASEL pin is used to select the unique device bus address. Connect this pin to an external resistor divider to select the device address. Always use a resistor divider to select the device address. Setting the device address in EEPROM is allowed, but can create problems if the device address is somehow lost by the host. It is safe and prudent to use the ASEL pin to set the device address. If RCONFIG pins are floated, the value stored in the corresponding NVM command is used. If bit 6 of the MFR_CONFIG_ALL_LTC3883 configuration command is asserted in NVM, the resistor inputs are ignored upon power-up except for ASEL which is always respected. The resistor configuration pins are only measured during a power-up reset or after an MFR_RESET command is executed.

The V_{OUT_CFG} and V_{TRIM} pin settings are described in Tables 12 and 13. These pins select the output voltage for the LTC3883's analog PWM controller. If both pins are open, the VOUT_COMMAND command is loaded from NVM to determine the output voltage.

The following parameters are set as a percentage of the output voltage if the RCONFIG pins are used to determined output voltage:

- VOUT_OV_FAULT_LIMIT ..... +10%
- VOUT_OV_WARN_LIMIT ..... +7.5%
- VOUT_MAX ..... +7.5%
- VOUT_MARGIN_HIGH ..... +5%
- POWER_GOOD_ON ..... –7%
- POWER_GOOD_OFF ..... –8%
- VOUT_MARGIN_LOW ..... –5%
- VOUT_UV_WARN_LIMIT ..... –6.5%
- VOUT_UV_FAULT_LIMIT ..... –7%

The FREQ_CFG pin settings are described in Table 14. This pin selects the switching frequency and phase relationship between the PWM channel and SYNC pin. To synchronize to an external clock, the part must be put into external clock

OPERATION

mode (FREQ_CFG pin shorted to ground). If no external clock is supplied, the part will clock at the lowest free-running frequency of the internal PWM oscillator. This low clock rate will increase the ripple current of the inductor possibly producing undesirable operation. If the external SYNC signal is missing or misbehaving, a "PLL Lock Status" fault will be indicated in the STATUS_MFR_SPECIFIC command. If the user does not wish to see the PLL_FAULT even if there is not a valid synchronization signal at power up, bit 3 of the MFR_CONFIG_ALL_LTC3883 command must be asserted. If the SYNC pin is connected between multiple ICs only one of the ICs can be the oscillator, all other ICs must be configured to external clock.

The ASEL pin settings are described in Table 15. This pin selects the bottom 4 bits of the slave address for the LTC3883. The three most significant bits are retrieved from the NVM MFR_ADDRESS command. If the pin is floating, the 7-bit value stored in NVM MFR_ADDRESS command is used to determine the slave address. For more detail, refer to Table 15a.

Note: Per the PMBus specification, pin programmed parameters can be overridden by commands from the digital interface with the exception of ASEL which is always honored. Do not set any part address to 0x5A or 0x5B because these are global addresses and all parts will respond to them.

FAULT DETECTION AND HANDLING

A variety of fault and warning reporting and handling mechanisms are available. Fault and warning detection capabilities include:

- Input OV/FAULT Protection and UV Warning
- Average Input OC Warn
- Output OV/UV Fault and Warn Protection
- Output OC Fault and Warn Protection
- Internal and External Overtemperature Fault and Warn Protection
- External Undertemperature Fault and Warn Protection
- CML Fault (Communication, Memory or Logic)
- External Fault Detection via the Bidirectional $\overline{\text{GPIO}}$ Pins.

In addition, the LTC3883 can map any combination of fault indicators to the $\overline{\text{GPIO}}$ pin using the propagate $\overline{\text{GPIO}}$ response commands, MFR_GPIO_PROPAGATE_LTC3883. Typical usage of the $\overline{\text{GPIO}}$ pin is as a driver for an external crowbar device, overtemperature alert, overvoltage alert or as an interrupt to cause a microcontroller to poll the fault commands. Alternatively, the $\overline{\text{GPIO}}$ pin can be used as an input to detect external faults downstream of the controller that require an immediate response. The $\overline{\text{GPIO}}$ pin can also be configured as a power good output. Power good indicates the controller output is above the power good threshold. At power-up the pin will initially be three-state. If it is necessary to have the desired polarity on the pin at power-up in this configuration, attach a Schottky diode between the RUN pin of the propagated power good signal and the $\overline{\text{GPIO}}$ pin. The Cathode must be attached to RUN and the Anode to the $\overline{\text{GPIO}}$ pin. If the $\overline{\text{GPIO}}$ pin is set to a power good status, the MFR_GPIO_RESPONSE must be ignore otherwise there is a latched off condition with the controller.

As described in the Soft-Start section, it is possible to control start-up through concatenated events. If $\overline{\text{GPIO}}$ is used to drive the RUN pin of another controller, the unfiltered VOUT_UV fault limit should be mapped to the $\overline{\text{GPIO}}$ pin.

Any fault or warning event will cause the $\overline{\text{ALERT}}$ pin to assert low. The pin will remain asserted low until the CLEAR_FAULTS command is issued, the fault bit is written to a 1 or bias power is cycled or a MFR_RESET command is issued, or the RUN pin is toggled OFF/ON or the part is commanded OFF/ON via PMBus. The MFR_GPIO_PROPAGATE_LTC3883 command determines if the $\overline{\text{GPIO}}$ pin is pulled low when a fault is detected; however, the $\overline{\text{ALERT}}$ pin is always pulled low if a fault or warning is detected and the status bits are updated.

Output and input fault event handling is controlled by the corresponding fault response byte as specified in Tables 5 to 9. Shutdown recovery from these types of faults can either be autonomous or latched. For autonomous recovery, the faults are not latched, so if the fault condition is not present after the retry interval has elapsed, a new soft-start is attempted. If the fault persists, the controller will continue to retry. The retry interval is specified by the MFR_RETRY_DELAY command and prevents damage

OPERATION

to the regulator components by repetitive power cycling, assuming the fault condition itself is not immediately destructive. The MFR_RETRY_DELAY must be greater than 120ms. It can not exceed 83.88 seconds.

The $\overline{GPIO}$ pin of the LTC3883 can share faults with all LTC PMBus products including the LTC3880, LTC2974, LTC2978, LTC4676 µModule, etc. In the event of an internal fault, one or more of the LTC3883s is configured to pull the bussed $\overline{GPIO}$ pins low. The other LTC3883s are then configured to shut down when the $\overline{GPIO}$ pin bus is pulled low. For autonomous group retry, the faulted LTC3883 is configured to let go of the $\overline{GPIO}$ pin bus after a retry interval, assuming the original fault has cleared. All the LTC3883s in the group then begin a soft-start sequence. If the fault response is LATCH_OFF, the $\overline{GPIO}$ pin remains asserted low until either the RUN pin is toggled OFF/ON or the part is commanded OFF/ON. The toggling of the RUN either by the pin or OFF/ON command will clear faults associated with the LTC3883. If it is desired to have all faults cleared when either RUN pin is toggled, set bit 0 of MFR_CONFIG_ALL_LTC3883 to a 1.

The status of all faults and warnings is summarized in the STATUS_WORD and STATUS_BYTE commands.

Additional fault detection and handling capabilities are:

CRC Failure

The integrity of the NVM memory is checked after a power-on reset. A CRC failure will prevent the controller from leaving the inactive state. If a CRC failure occurs, the CML bit is set in the STATUS_BYTE and STATUS_WORD commands, the appropriate bit is set in the STATUS_MFR_SPECIFIC command, and the $\overline{ALERT}$ pin will be pulled low. NVM repair can be attempted by writing the desired configuration to the controller and executing a STORE_USER_ALL command followed by a CLEAR_FAULTS command.

The LTC3883 manufacturing section of the NVM is mirrored. The NVM has the ability to perform limited repair if either one of the two sections of the manufacturing section of the NVM if the configuration becomes corrupted. If a discrepancy is detected, the “NVM CRC Fault” in the STATUS_MFR_SPECIFIC command is set. If this bit remains set after being cleared by issuing a CLEAR_FAULTS or writing a 1 to this bit, an irrecoverable internal fault has occurred. The user is cautioned to disable both output power supply rails associated with this specific part. There are no provisions for field repairing unrecoverable NVM faults in the manufacturing section.

SERIAL INTERFACE

The LTC3883 serial interface is a PMBus compliant slave device and can operate at any frequency between 10kHz and 400kHz. The address is configurable using either the NVM or an external resistor divider. In addition the LTC3883 always responds to the global broadcast address of 0x5A (7 bit) or 0x5B (7 bit).

The serial interface supports the following protocols defined in the PMBus specifications: 1) send command, 2) write byte, 3) write word, 4) group, 5) read byte, 6) read word and 7) read block. All read operations will return a valid PEC if the PMBus master requests it. If the PEC_REQUIRED bit is set in the MFR_CONFIG_ALL_LTC3883 command, the PMBus write operations will not be acted upon until a valid PEC has been received by the LTC3883.

Communication Failure

PEC write errors (if PEC_REQUIRED is active), attempts to access unsupported commands, or writing invalid data to supported commands will result in a CML fault. The CML bit is set in the STATUS_BYTE and STATUS_WORD commands, the appropriate bit is set in the STATUS_CML command, and the $\overline{ALERT}$ pin is pulled low.

DEVICE ADDRESSING

The LTC3883 offers four different types of addressing over the PMBus interface, specifically: 1) global, 2) device, 3) rail addressing and 4) alert response address (ARA).

Global addressing provides a means of the PMBus master to address all LTC3883 devices on the bus. The LTC3883 global address is fixed 0x5A (7 bit) or 0xB4 (8 bit) and cannot be disabled.

Device addressing provides the standard means of the PMBus master communicating with a single instance of an LTC3883. The value of the device address is set

OPERATION

by a combination of the ASEL configuration pin and the MFR_ADDRESS command. Device addressing can be disabled by writing a value of 0x80 to the MFR_ADDRESS.

Rail addressing provides a means of the PMBus master addressing a set of LTC3883s connected to the same output rail, simultaneously. This is similar to global addressing, however, the PMBus address can be dynamically assigned by using the MFR_RAIL_ADDRESS command. It is recommended that rail addressing should be limited to command write operations.

All four means of PMBus addressing require the user to employ disciplined planning to avoid addressing conflicts.

RESPONSES TO V_{OUT} AND I_{OUT} FAULTS

V_{OUT} OV and UV conditions are monitored by comparators. The OV and UV limits are set in three ways.

- As a Percentage of the V_{OUT} if Using the Resistor Configuration Pins
- In NVM if Either Programmed at the Factory or Through the GUI
- By PMBus Command

The I_{IN} and I_{OUT} overcurrent monitors are performed by ADC readings and calculations. Thus these values are based on average currents and can have a time latency of up to 90ms. The I_{OUT} calculation accounts for the sense resistor and the temperature coefficient of the resistor. The input channel current is equal to the sum of output current times the PWM duty cycle plus the input offset current for each channel. If this calculated input current exceed the IN_OC_WARN_LIMIT the $\overline{\text{ALERT}}$ pin is pulled low and the IIN_OC_WARN bit is asserted in the STATUS_INPUT command.

The digital processor within the LTC3883 provides the ability to ignore the fault, shut down and latch off or shut down and retry indefinitely (hiccup). The retry interval is set in MFR_RETRY_DELAY and can be from 120ms to 83.88 seconds in 1ms increments. The shutdown for OV/UV and OC can be done immediately or after a user selectable deglitch time.

Output Overvoltage Fault Response

A programmable overvoltage comparator (OV) guards against transient overshoots as well as long-term overvoltages at the output. In such cases, the top MOSFET is turned off and the bottom MOSFET is turned on until the overvoltage condition is cleared *regardless of the PMBus VOUT_OV_FAULT_RESPONSE command byte value.* This hardware level fault response delay is typically 2µs from the overvoltage condition to BG asserted high. Using the VOUT_OV_FAULT_RESPONSE command, the user can select any of the following behaviors:

- OV Pull-Down Only (OV cannot be ignored)
- Shut Down (Stop Switching) Immediately—Latch Off
- Shut Down Immediately—Retry Indefinitely at the Time Interval Specified in MFR_RETRY_DELAY

Either the Latch Off or Retry fault responses can be deglitched in increments of (0-7) • 10µs. See Table 5.

Output Undervoltage Response

The response to an undervoltage comparator output can be either:

- Ignore
- Shut Down Immediately—Latch Off
- Shut Down Immediately—Retry Indefinitely at the Time Interval Specified in MFR_RETRY_DELAY

The UV responses can be deglitched. See Table 6.

Peak Output Overcurrent Fault Response

Due to the current mode control algorithm, peak output current across the inductor is always limited on a cycle by cycle basis. The value of the peak current limit is specified in sense voltage in the EC table. The current limit circuit operates by limiting the I_{TH} maximum voltage. If DCR sensing is used, the I_{TH} maximum voltage has a temperature dependency directly proportional to the TC of the DCR of the inductor. The LTC3883 automatically monitors the external temperature sensors and modifies the maximum allowed I_{TH} to compensate for this term.

OPERATION

The overcurrent fault processing circuitry can execute the following behaviors:

- Current Limit Indefinitely
- Shut Down Immediately—Latch Off
- Shut Down Immediately—Retry Indefinitely at the Time Interval Specified in MFR_RETRY_DELAY

The overcurrent responses can be deglitched in increments of (0-7) • 16ms. See Table 7

RESPONSES TO TIMING FAULTS

TON_MAX_FAULT_LIMIT is the time allowed for V_{OUT} to rise and settle at start-up. The TON_MAX_FAULT_LIMIT condition is predicated upon detection of the VOUT_UV_FAULT_LIMIT as the output is undergoing a SOFT_START sequence. The TON_MAX_FAULT_LIMIT time is started after TON_DELAY has been reached and a SOFT_START sequence is started. The resolution of the TON_MAX_FAULT_LIMIT is 10µs. If the VOUT_UV_FAULT_LIMIT is not reached within the TON_MAX_FAULT_LIMIT time, the response of this fault is determined by the value of the TON_MAX_FAULT_RESPONSE command value. This response may be one of the following:

- Ignore
- Shut Down (Stop Switching) Immediately—Latch Off
- Shut Down Immediately—Retry Indefinitely at the Time Interval Specified in MFR_RETRY_DELAY

This fault response is not deglitched. A value of 0 in TON_MAX_FAULT_LIMIT means the fault is ignored. The TON_MAX_FAULT_LIMIT should be set longer than the TON_RISE time. It is recommended TON_MAX_FAULT_LIMIT always be set to a non-zero value, otherwise the output may never come up and no flag will be set to the user.

See Table 9.

RESPONSES TO V_{IN} OV FAULTS

V_{IN} overvoltage is measured with the MUX'd ADC; therefore, the response is naturally deglitched by the 90ms typical response time of the ADC. The fault responses are:

- Ignore
- Shut Down Immediately—Latch Off
- Shut Down Immediately—Retry Indefinitely at the Time Interval Specified in MFR_RETRY_DELAY

See Table 9.

RESPONSES TO OT/UT FAULTS

Overtemperature Fault Response—Internal

An internal temperature sensor protects against NVM damage. Above 85°C, no writes to NVM are recommended. Above 130°C, the part disables the NVM and does not re-enable until the internal temperature has dropped to 125°C. The LTC3883 sets bit 7 of the STATUS_TEMPERATURE command ('OT Warn') above 130°C, and this bit cannot be cleared until the internal temperature has dropped to 125°C. Above 160°C, the LTC3883 disables the PWM and does not re-enable the PWM until the internal temperature has dropped to 150°C. The part sets bit 6 of the STATUS_TEMPERATURE command ('OT Fault') above 160°C, and this bit cannot be cleared until the internal temperature has dropped to 150°C. Temperature is measured by the ADC. Internal temperature faults cannot be ignored. Internal temperature limits cannot be adjusted by the user.

See Table 9.

Overtemperature and Undertemperature Fault Response—Externals

An external temperature sensors can be used to sense critical circuit elements like the inductor and power MOSFETs. The OT_FAULT_RESPONSE and UT_FAULT_RESPOSE commands are used to determine the appropriate response to an overtemperature and undertemperature condition, respectively. If no external sense element is used (not recommended) set the UT_FAULT_RESPONSE to ignore and set the UT_FAULT_LIMIT to –275°C.

The fault responses are:

- Ignore
- Shut Down Immediately—Latch Off
- Shut Down Immediately—Retry Indefinitely at the Time Interval Specified in MFR_RETRY_DELAY

See Table 9.

OPERATION

RESPONSES TO INPUT OVERCURRENT AND OUTPUT UNDERCURRENT FAULTS

Input overcurrent and output undercurrent are measured with the MUX'd ADC. Both of these measurements are naturally deglitched by the 90ms typical response time of the ADC. The fault responses are:

- Ignore
- Shut Down Immediately—Latch Off
- Shut Down Immediately—Retry Indefinitely at the Time Interval Specified in MFR_RETRY_DELAY

See Table 9.

RESPONSES TO EXTERNAL FAULTS

When the $\overline{\text{GPIO}}$ pin is pulled low, the OTHER bit is set in the STATUS_WORD command, the appropriate bit is set in the STATUS_MFR_SPECIFC command, and the $\overline{\text{ALERT}}$ pin is pulled low. Responses are not deglitched. The LTC3883 can be configured to ignore or shut down then retry in response to its $\overline{\text{GPIO}}$ pin going low by modifying the MFR_GPIO_RESPONSE command. To avoid the $\overline{\text{ALERT}}$ pin asserting low when GPIO is pulled low, assert bit 1 of MFR_CHAN_CONFIG_LTC3883.

FAULT LOGGING

The LTC3883 has fault logging capability. Data is logged into memory in the order shown in Table 11. The data is stored in a continuously updated buffer in RAM. When a fault event occurs, the fault log buffer is copied from the RAM buffer into NVM. Fault logging is allowed at temperatures above 85°C; however, retention of 10 years is not guaranteed. When the die temperature exceeds 130°C, the fault logging is delayed until the die temperature drops below 120°C. The fault log data remains in NVM until a MFR_FAULT_LOG_CLEAR command is issued. Issuing this command re-enables the fault log feature. Before re-enabling fault log, be sure no faults are present and a CLEAR_FAULTS command has been issued.

When the LTC3883 powers-up, it checks the NVM for a valid fault log. If a valid fault log exists in NVM, the "Valid Fault Log" bit in the STATUS_MFR_SPECIFIC command will be set and an $\overline{\text{ALERT}}$ event will be generated. Also, fault logging will be blocked until the LTC3883 has received a MFR_FAULT_LOG_CLEAR command before fault logging will be re-enabled.

The information is stored in EEPROM in the event of any fault that disables the controller. The $\overline{\text{GPIO}}$ pin being externally pulled low will not trigger a fault logging event.

BUS TIMEOUT FAILURE

The LTC3883 implements a timeout feature to avoid hanging the serial interface. The data packet timer begins at the first START event before the device address write byte. Data packet information must be completed within 20ms or the LTC3883 will three-state the bus and ignore the given data packet. Data packet information includes the device address byte write, command byte, repeat start event (if a read operation), device address byte read (if a read operation), all data bytes and the PEC byte if applicable.

The LTC3883 allows longer PMBus timeouts for block read data packets. This timeout is proportional to the length of the block read. The additional block read timeout applies primarily to the MFR_FAULT_LOG command. In no circumstances will the timeout period be less than the $t_{TIMEOUT_SMB}$ specification of 32ms (typical).

The user is encouraged to use as high a clock rate as possible to maintain efficient data packet transfer between all devices sharing the serial bus interface. The LTC3883 supports the full PMBus frequency range from 10kHz to 400kHz.

SIMILARITY BETWEEN PMBUS, SMBUS AND I^2C 2-WIRE INTERFACE

The PMBus 2-wire interface is an incremental extension of the SMBus. SMBus is built upon I^2C with some minor differences in timing, DC parameters and protocol. The PMBus/SMBus protocols are more robust than simple I^2C byte commands because PMBus/SMBus provide time-outs to prevent bus hangs and optional packet error checking (PEC) to ensure data integrity. In general, a master device that can be configured for I^2C communication can be used for PMBus communication with little or no change to hardware or firmware. Repeat start (restart) is not supported by all I^2C controllers but is required for

OPERATION

SMBus/PMBus reads. If a general purpose I²C controller is used, check that repeat start is supported.

The LTC3883 supports the maximum SMBus clock speed of 100kHz and is compatible with the higher speed PMBus specification (between 100kHz and 400kHz) if clock stretching is enabled. For robust communication and operation refer to the Note section in the PMBus command summary. Clock stretching is enabled by assserting bit 1 of MFR_CONFIG_ALL_LTC3883.

For a description of the minor extensions and exceptions PMBus makes to SMBus, refer to PMBus Specification Part 1 Revision 1.1: Paragraph 5: Transport.

For a description of the differences between SMBus and I²C, refer to System Management Bus (SMBus) Specification Version 2.0: Appendix B—Differences Between SMBus and I²C.

PMBUS SERIAL DIGITAL INTERFACE

The LTC3883 communicates with a host (master) using the standard PMBus serial bus interface. The Timing Diagram, Figure 5, shows the timing relationship of the signals on the bus. The two bus lines, SDA and SCL, must be high when the bus is not in use. External pull-up resistors or current sources are required on these lines.

The LTC3883 is a slave device. The master can communicate with the LTC3883 using the following formats:

- Master transmitter, slave receiver
- Master receiver, slave transmitter

The following PMBus protocols are supported:

- Write Byte, Write Word, Send Byte
- Read Byte, Read Word, Block Read
- Alert Response Address

Figures 7-16 illustrate the aforementioned PMBus protocols. All transactions support PEC (parity error check) and GCP (group command protocol). The Block Read supports 255 bytes of returned data. For this reason, the PMBus timeout may be extended when reading the fault log.

Figure 6 is a key to the protocol diagrams in this section. PEC is optional.

A value shown below a field in the following figures is a mandatory value for that field.

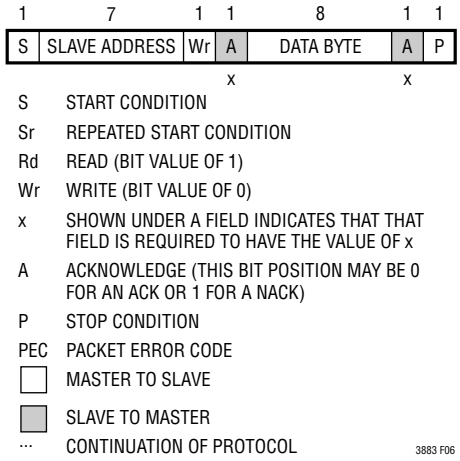

Figure 6. PMBus Packet Protocol Diagram Element Key

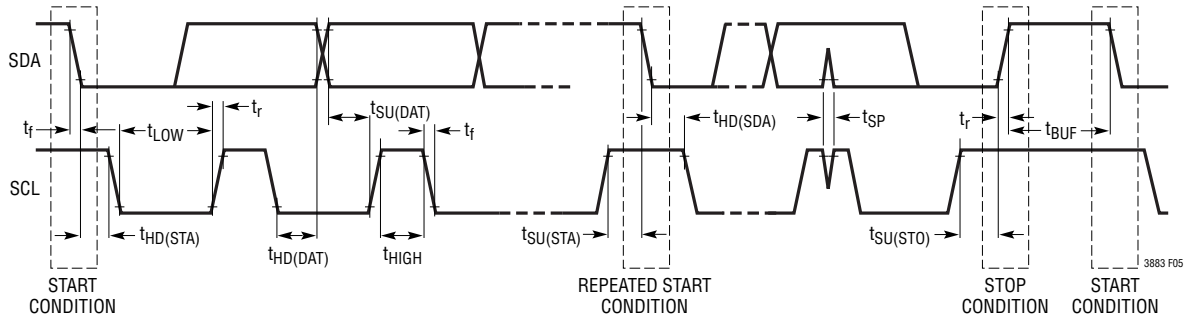

Figure 5. Timing Diagram

OPERATION

The data formats implemented by PMBus are:

- Master transmitter transmits to slave receiver. The transfer direction in this case is not changed.
- Master reads slave immediately after the first byte. At the moment of the first acknowledgment (provided by the slave receiver) the master transmitter becomes a master receiver and the slave receiver becomes a slave transmitter.
- Combined format. During a change of direction within a transfer, the master repeats both a start condition and the slave address but with the R/$\overline{W}$ bit reversed. In this case, the master receiver terminates the transfer by generating a NACK on the last byte of the transfer and a STOP condition.

Examples of these formats are shown in Figures 7-16.

Table 1. Data Format Terminology

PMBus TERMINOLOGY	MEANING	TERMINOLOGY FOR: SPECS, GUI, APPLICATION NOTES	ABBREVIATIONS FOR SUMMARY COMMAND TABLE	FOR MORE DETAIL REFER TO THE DATA FORMAT SECTION OF TABLE 2
Linear	Linear	Linear_5s_11s	L11	Page 35
Linear (for Voltage Related Commands)	Linear	Linear_16u	L16	Page 35
Direct	Direct-Manufacturer Customized	DirectMfr	CF	Page 35
Hex		Hex	I16	
ASCII		ASCII	ASC	
	Register Fields	Reg	Reg	

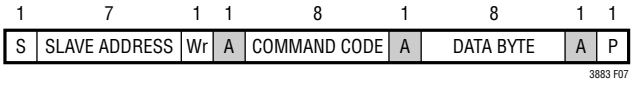

Figure 7. Write Byte Protocol

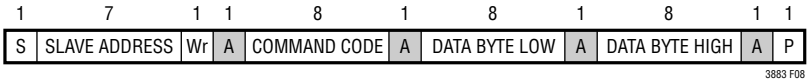

Figure 8. Write Word Protocol

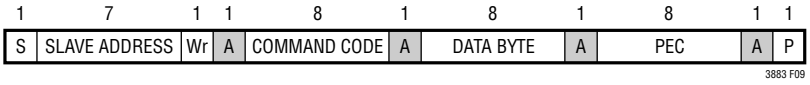

Figure 9. Write Byte Protocol with PEC

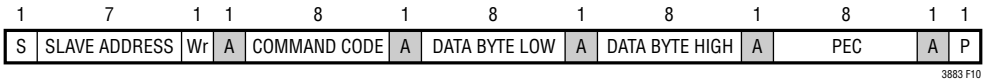

Figure 10. Write Word Protocol with PEC

OPERATION

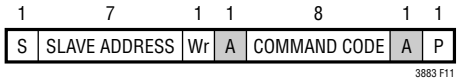

Figure 11. Send Byte Protocol

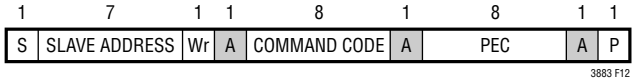

Figure 12. Send Byte Protocol with PEC

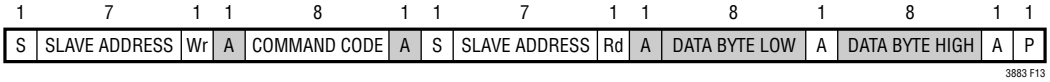

Figure 13. Read Word Protocol

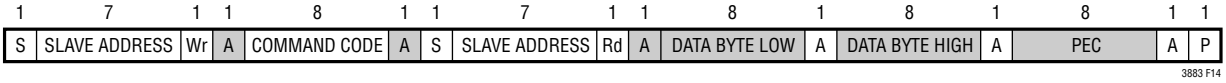

Figure 14. Read Word Protocol with PEC

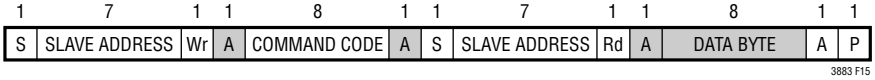

Figure 15. Read Byte Protocol

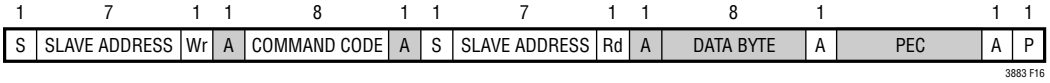

Figure 16. Read Byte Protocol with PEC

Refer to Figure 6 for a legend.

Handshaking features are included to ensure robust system communication. Please refer to the PMBus Communication and Command Processing subsection of the Applications Information section for further details.

PMBus COMMAND SUMMARY

PMBUS COMMANDS

The following tables list supported PMBus commands and manufacturer specific commands. A complete description of these commands can be found in the "PMBus Power System Mgt Protocol Specification – Part II – Revision 1.1". Users are encouraged to reference this specification. Exceptions or manufacturer specific implementations are listed below in Table 2. Floating point values listed in the "DEFAULT VALUE" column are either Linear 16-bit Signed (PMBus Section 8.3.1) or Linear_5s_11s (PMBus Section 7.1) format, whichever is appropriate for the command. All commands from 0xD0 through 0xFF not listed in this table are implicitly reserved by the manufacturer. Users should avoid blind writes within this range of commands to avoid undesired operation of the part. All commands from 0x00 through 0xCF not listed in this table are implicitly not supported by the manufacturer. Attempting to access non-supported or reserved commands may result in a CML command fault event. All output voltage settings and measurements are based on the VOUT_MODE setting of 0x14. This translates to an exponent of 2^{-12}.

If PMBus commands are received faster than they are being processed, the part may become too busy to handle new commands. In these circumstances the part follows the protocols defined in the PMBus Specification v1.1, Part II, Section 10.8.7, to communicate that it is busy. The part includes handshaking features to eliminate busy errors and simplify error handling software while ensuring robust communication and system behavior. Please refer to the subsection titled PMBus Communication and Command Processing in the Applications Information section for further details.

Table 2. Summary (Note: The Data Format abbreviations are detailed at the end of this table.)

COMMAND NAME	CMD CODE	DESCRIPTION	TYPE	DATA FORMAT	UNITS	NVM	DEFAULT VALUE	PAGE
PAGE	0x00	Provides integration with multi-page PMBus devices.	R/W Byte	Reg			0x00	64
OPERATION	0x01	Operating mode control. On/off, margin high and margin low.	R/W Byte	Reg		Y	0x80	67
ON_OFF_CONFIG	0x02	RUN pin and PMBus bus on/off command configuration.	R/W Byte	Reg		Y	0x1E	66
CLEAR_FAULTS	0x03	Clear any fault bits that have been set.	Send Byte				NA	92
WRITE_PROTECT	0x10	Level of protection provided by the device against accidental changes.	R/W Byte	Reg		Y	0x00	64
STORE_USER_ALL	0x15	Store user operating memory to EEPROM.	Send Byte				NA	100
RESTORE_USER_ALL	0x16	Restore user operating memory from EEPROM.	Send Byte				NA	100
CAPABILITY	0x19	Summary of PMBus optional communication protocols supported by this device.	R Byte	Reg			0xB0	91
VOUT_MODE	0x20	Output voltage format and exponent (2^{-12}).	R Byte	Reg			2^{-12} 0x14	71
VOUT_COMMAND	0x21	Nominal output voltage set point.	R/W Word	L16	V	Y	1.0 0x1000	73
VOUT_MAX	0x24	Upper limit on the commanded output voltage including VOUT_MARIN_HIGH.	R/W Word	L16	V	Y	5.5 0x5800	72
VOUT_MARGIN_HIGH	0x25	Margin high output voltage set point. Must be greater than VOUT_COMMAND.	R/W Word	L16	V	Y	1.05 0x10CD	72
VOUT_MARGIN_LOW	0x26	Margin low output voltage set point. Must be less than VOUT_COMMAND.	R/W Word	L16	V	Y	0.95 0x0F33	73
VOUT_TRANSITION_RATE	0X27	Rate the output changes when VOUT commanded to a new value.	R/W Word	L11	V/ms	Y	0.25 AA00	80
FREQUENCY_SWITCH	0x33	Switching frequency of the controller.	R/W Word	L11	kHz	Y	350 0xFABC	70

PMBus COMMAND SUMMARY

COMMAND NAME	CMD CODE	DESCRIPTION	TYPE	DATA FORMAT	UNITS	NVM	DEFAULT VALUE	PAGE
VIN_ON	0x35	Input voltage at which the unit should start power conversion.	R/W Word	L11	V	Y	6.5 0xCB40	71
VIN_OFF	0x36	Input voltage at which the unit should stop power conversion.	R/W Word	L11	V	Y	6.0 0xCB00	71
IOUT_CAL_GAIN	0x38	The ratio of the voltage at the current sense pins to the sensed current. For devices using a fixed current sense resistor, it is the resistance value in mΩ.	R/W Word	L11	mΩ	Y	1.8 0xBB9A	74
VOUT_OV_FAULT_LIMIT	0x40	Output overvoltage fault limit.	R/W Word	L16	V	Y	1.1 0x119A	72
VOUT_OV_FAULT_RESPONSE	0x41	Action to be taken by the device when an output overvoltage fault is detected.	R/W Byte	Reg		Y	0xB8	83
VOUT_OV_WARN_LIMIT	0x42	Output overvoltage warning limit.	R/W Word	L16	V	Y	1.075 0x1133	72
VOUT_UV_WARN_LIMIT	0x43	Output undervoltage warning limit.	R/W Word	L16	V	Y	0.925 0x0ECD	73
VOUT_UV_FAULT_LIMIT	0x44	Output undervoltage fault limit.	R/W Word	L16	V	Y	0.9 0x0E66	73
VOUT_UV_FAULT_RESPONSE	0x45	Action to be taken by the device when an output undervoltage fault is detected.	R/W Byte	Reg		Y	0xB8	84
IOUT_OC_FAULT_LIMIT	0x46	Output overcurrent fault limit.	R/W Word	L11	A	Y	29.75 0xDBB8	77
IOUT_OC_FAULT_RESPONSE	0x47	Action to be taken by the device when an output overcurrent fault is detected.	R/W Byte	Reg		Y	0x00	86
IOUT_OC_WARN_LIMIT	0x4A	Output overcurrent warning limit.	R/W Word	L11	A	Y	20.0 0xDA80	77
OT_FAULT_LIMIT	0x4F	External overtemperature fault limit.	R/W Word	L11	C	Y	100.0 0xEB20	79
OT_FAULT_RESPONSE	0x50	Action to be taken by the device when an external overtemperature fault is detected,	R/W Byte	Reg		Y	0xB8	87
OT_WARN_LIMIT	0x51	External overtemperature warning limit.	R/W Word	L11	C	Y	85.0 0xEAA8	79
UT_FAULT_LIMIT	0x53	External undertemperature fault limit.	R/W Word	L11	C	Y	–40.0 0xE580	79
UT_FAULT_RESPONSE	0x54	Action to be taken by the device when an external undertemperature fault is detected.	R/W Byte	Reg		Y	0xB8	88
VIN_OV_FAULT_LIMIT	0x55	Input supply overvoltage fault limit.	R/W Word	L11	V	Y	15.5 0xD3E0	70
VIN_OV_FAULT_RESPONSE	0x56	Action to be taken by the device when an input overvoltage fault is detected.	R/W Byte	Reg		Y	0x80	82
VIN_UV_WARN_LIMIT	0x58	Input supply undervoltage warning limit.	R/W Word	L11	V	Y	6.3 0xCB26	70
IIN_OC_WARN_LIMIT	0x5D	Input supply overcurrent warning limit.	R/W Word	L11	A	Y	10.0 0xD280	78
POWER_GOOD_ON	0x5E	Output voltage at or above which a power good should be asserted.	R/W Word	L16	V	Y	0.93 0x0EE1	73
POWER_GOOD_OFF	0x5F	Output voltage at or below which a power good should be de-asserted.	R/W Word	L16	V	Y	0.92 0x0EB8	74
TON_DELAY	0x60	Time from RUN and/or Operation on to output rail turn-on.	R/W Word	L11	ms	Y	0.0 0x8000	80

PMBus COMMAND SUMMARY

COMMAND NAME	CMD CODE	DESCRIPTION	TYPE	DATA FORMAT	UNITS	NVM	DEFAULT VALUE	PAGE
TON_RISE	0x61	Time from when the output starts to rise until the output voltage reaches the VOUT commanded value.	R/W Word	L11	ms	Y	8.0 0xD200	80
TON_MAX_FAULT_LIMIT	0x62	Maximum time from V_{OUT_EN} on for VOUT to cross the VOUT_UV_FAULT_LIMIT.	R/W Word	L11	ms	Y	10.00 0xD280	80
TON_MAX_FAULT_ RESPONSE	0x63	Action to be taken by the device when a TON_ MAX_FAULT event is detected.	R/W Byte	Reg		Y	0xB8	85
TOFF_DELAY	0x64	Time from RUN and/or Operation off to the start of TOFF_FALL ramp.	R/W Word	L11	ms	Y	0.0 0x8000	81
TOFF_FALL	0x65	Time from when the output starts to fall until the output reaches zero volts.	R/W Word	L11	ms	Y	8.00 0xD200	81
TOFF_MAX_WARN_LIMIT	0x66	Maximum allowed time, after TOFF_FALL completed, for the unit to decay below 12.5%.	R/W Word	L11	ms	Y	150 0xF258	81
STATUS_BYTE	0x78	One byte summary of the unit's fault condition.	R/W Byte	Reg			NA	92
STATUS_WORD	0x79	Two byte summary of the unit's fault condition.	R/W Word	Reg			NA	92
STATUS_VOUT	0x7A	Output voltage fault and warning status.	R/W Byte	Reg			NA	93
STATUS_IOUT	0x7B	Output current fault and warning status.	R/W Byte	Reg			NA	93
STATUS_INPUT	0x7C	Input supply fault and warning status.	R/W Byte	Reg			NA	93
STATUS_TEMPERATURE	0x7D	External temperature fault and warning status for READ_TEMERATURE_1.	R/W Byte	Reg			NA	93
STATUS_CML	0x7E	Communication and memory fault and warning status.	R/W Byte	Reg			NA	94
STATUS_MFR_SPECIFIC	0x80	Manufacturer specific fault and state information.	R/W Byte	Reg			NA	94
READ_VIN	0x88	Measured input supply voltage.	R Word	L11	V		NA	96
READ_IIN	0x89	Measured input supply current.	R Word	L11	A		NA	96
READ_VOUT	0x8B	Measured output voltage.	R Word	L16	V		NA	96
READ_IOUT	0x8C	Measured output current.	R Word	L11	A		NA	96
READ_TEMPERATURE_1	0x8D	External diode junction temperature. This is the value used for all temperature related processing, including IOUT_CAL_GAIN.	R Word	L11	C		NA	98
READ_TEMPERATURE_2	0x8E	Internal junction temperature. Does not affect any other commands.	R Word	L11	C		NA	98
READ_DUTY_CYCLE	0x94	Duty cycle of the top gate control signal.	R Word	L11	%		NA	98
READ_POUT	0x96	Calculated output power.	R Word	L11	W		NA	98
READ_PIN	0x97	Calculated input power	R Word	L11	W		NA	98
PMBus_REVISION	0x98	PMBus revision supported by this device. Current revision is 1.1.	R Byte	Reg		FS	0x11	91
MFR_ID	0x99	The manufacturer ID of the LTC3883 in ASCII.	R String	ASC			LTC	91
MFR_MODEL	0x9A	Manufacturer part number in ASCII.	R String	ASC			LTC3883	91
MFR_VOUT_MAX	0xA5	Maximum allowed voltage command including VOUT_OV_FAULT_LIMIT.	R Word	L16	V		5.5 0x5800	74
USER_DATA_00	0xB0	OEM RESERVED. Typically used for part serialization.	R/W Word	Reg		Y	NA	90
USER_DATA_01	0xB1	Manufacturer reserved for LTpowerPlay.	R/W Word	Reg		Y	NA	90
USER_DATA_02	0xB2	OEM RESERVED. Typically used for part serialization	R/W Word	Reg		Y	NA	90
USER_DATA_03	0xB3	An NVM word available for the user.	R/W Word	Reg		Y	0x0000	90

PMBus COMMAND SUMMARY

COMMAND NAME	CMD CODE	DESCRIPTION	TYPE	DATA FORMAT	UNITS	NVM	DEFAULT VALUE	PAGE
USER_DATA_04	0xB4	An NVM word available for the user.	R/W Word	Reg		Y	0x0000	90
MFR_T_SELF_HEAT	0xB8	Reports the calculated self heat value attributed to the inductor.	R Word	L11	C		NA	75
MFR_IOUT_CAL_GAIN_TAU_INV	0xB9	Coefficient used to emulate thermal time constant.	R/W Word	L11	s^{-1}	Y	0.0 0x8000	75
MFR_IOUT_CAL_GAIN_THETA	0xBA	Used to calculate the instance inductor self heating effect.	R/W Word	L11	C/Watt	Y	0.0 0x8000	75
MFR_EE_UNLOCK	0xBD	Unlock user EEPROM for access by MFR_EE_ERASE and MFR_EE_DATA commands.	R/W Byte	Reg			NA	104
MFR_EE_ERASE	0xBE	Initialize user EEPROM for bulk programming by MFR_EE_DATA.	R/W Byte	Reg			NA	105
MFR_EE_DATA	0xBF	Data transferred to and from EEPROM using sequential PMBus word reads or writes. Supports bulk programming.	R/W Word	Reg			NA	105
MFR_CHAN_CONFIG_LTC3883	0xD0	Configuration bits that are channel specific.	R/W Byte	Reg		Y	0x1F	65
MFR_CONFIG_ALL_LTC3883	0xD1	General configuration bit.	R/W Byte	Reg		Y	0x09	66
MFR_GPIO_PROPAGATE_LTC3883	0xD2	Configuration that determines which faults are propagated to the GPIO pin.	R/W Word	Reg		Y	0x2993	89
MFR_PWM_MODE_LTC3883	0xD4	Configuration for the PWM engine.	R/W Byte	Reg		Y	0xD2	68
MFR_GPIO_RESPONSE	0xD5	Action to be taken by the device when the GPIO pin is externally asserted low.	R/W Byte	Reg		Y	0xC0	90
MFR_OT_FAULT_RESPONSE	0xD6	Action to be taken by the device when an internal overtemperature fault is detected.	R Byte	Reg			0xC0	87
MFR_IOUT_PEAK	0xD7	Report the maximum measured value of READ_IOUT since last MFR_CLEAR_PEAKS.	R Word	L11	A		NA	98
MFR_RETRY_DELAY	0xDB	Retry interval during FAULT retry mode.	R/W Word	L11	ms	Y	350 0xFABC	82
MFR_RESTART_DELAY	0xDC	Minimum time the RUN pin is held low by the LTC3883.	R/W Word	L11	ms	Y	500 0xFBE8	82
MFR_VOUT_PEAK	0xDD	Maximum measured value of READ_VOUT since last MFR_CLEAR_PEAKS.	R Word	L16	V		NA	98
MFR_VIN_PEAK	0xDE	Maximum measured value of READ_VIN since last MFR_CLEAR_PEAKS.	R Word	L11	V		NA	99
MFR_TEMPERATURE_1_PEAK	0xDF	Maximum measured value of external Temperature (READ_TEMPERATURE_1) since last MFR_CLEAR_PEAKS.	R Word	L11	C		NA	99
MFR_READ_IIN_PEAK	0xE1	Maximum measured value of READ_IIN command since last MFR_CLEAR_PEAKS	R Word	L11	A		NA	99
MFR_CLEAR_PEAKS	0xE3	Clears all peak values.	Send Byte				NA	92
MFR_READ_ICHIP	0xE4	Measured supply current of the LTC3883	R Word	L11	A		NA	99
MFR_PADS	0xE5	Digital status of the I/O pads.	R Word	Reg			NA	95
MFR_ADDRESS	0xE6	Sets the 7-bit I^2C address byte.	R/W Byte	Reg		Y	0x4F	65
MFR_SPECIAL_ID	0xE7	Manufacturer code representing the LTC3883	R Word	Reg			0x430X	91
MFR_IIN_CAL_GAIN	0xE8	The resistance value of the input current sense element in mΩ.	R/W Word	L11	mΩ	Y	5 0xCA80	78

PMBus COMMAND SUMMARY

COMMAND NAME	CMD CODE	DESCRIPTION	TYPE	DATA FORMAT	UNITS	NVM	DEFAULT VALUE	PAGE
MFR_FAULT_LOG_STORE	0xEA	Command a transfer of the fault log from RAM to EEPROM. This causes the part to behave as if a channel has faulted off.	Send Byte				NA	101
MFR_FAULT_LOG_CLEAR	0xEC	Initialize the EEPROM block reserved for fault logging and clear any previous fault logging locks.	Send Byte				NA	104
MFR_READ_IIN_CHAN	0xED	Calculated input current based upon READ_IOUT and DUTY_CYCLE.	R Word	L11	A		NA	99
MFR_FAULT_LOG	0xEE	Fault log data bytes. This sequentially retrieved data is used to assemble a complete fault log.	R Block	Reg		Y	NA	101
MFR_COMMON	0xEF	Manufacturer status bits that are common across multiple LTC chips.	R Byte	Reg			NA	95
MFR_COMPARE_USER_ALL	0xF0	Compares current command contents with NVM.	Send Byte				NA	100
MFR_TEMPERATURE_2_PEAK	0xF4	Peak internal die temperature since last MFR_CLEAR_PEAKS.	R Word	L11	C		NA	99
MFR_PWM_CONFIG_LTC3883	0xF5	Set numerous parameters for the DC/DC controller including phasing.	R/W Byte	Reg		Y	0x10	69
MFR_IOUT_CAL_GAIN_TC	0xF6	Temperature coefficient of the current sensing element.	R/W Word	CF	ppm/°C	Y	3900 0x0F3C	74
MFR_RVIN	0xF7	The resistance value of the V_{IN} pin filter element in mΩ.	R/W Word	L11	mΩ	Y	3000 0x12EE	71
MFR_TEMP_1_GAIN	0xF8	Sets the slope of the external temperature sensor.	R/W Word	CF		Y	1.0 0x4000	78
MFR_TEMP_1_OFFSET	0xF9	Sets the offset of the external temperature sensor with respect to –273.1°C	R/W Word	L11	C	Y	0.0 0x8000	79
MFR_RAIL_ADDRESS	0xFA	Common address for PolyPhase outputs to adjust common parameters.	R/W Byte	Reg		Y	0x80	65
MFR_RESET	0xFD	Commanded reset without requiring a power down.	Send Byte				NA	68

Note 1: Commands indicated with Y indicate that these commands are stored and restored using the STORE_USER_ALL and RESTORE_USER_ALL commands, respectively.

Note 2: Commands with a default value of NA indicate “not applicable”. Commands with a default value of FS indicate “factory set on a per part basis”.

Note 3: The LTC3883 contains additional commands not listed in this table. Reading these commands is harmless to the operation of the IC; however, the contents and meaning of these commands can change without notice.

Note 4: Some of the unpublished commands are read-only and will generate a CML bit 6 fault if written.

Note 5: Writing to commands not published in this table is not permitted.

Note 6: The user should not assume compatibility of commands between different parts based upon command names. Always refer to the manufacturer’s data sheet for each part for a complete definition of a command’s function.

LTC has made every reasonable attempt to keep command functionality compatible between parts; however, differences may occur to address product requirements.

PMBus COMMAND SUMMARY

*DATA FORMAT

L11	Linear_5s_11s	PMBus data field b[15:0] Value = $Y \cdot 2^N$ where N = b[15:11] is a 5-bit two's complement integer and Y = b[10:0] is an 11-bit two's complement integer Example: For b[15:0] = 0x9807 = 'b10011_000_0000_0111 Value = $7 \cdot 2^{-13} = 854 \cdot 10^{-6}$ From "PMBus Spec Part II: Paragraph 7.1"
L16	Linear_16u	PMBus data field b[15:0] Value = $Y \cdot 2^N$ where Y = b[15:0] is an unsigned integer and N = Vout_mode_parameter is a 5-bit two's complement exponent that is hardwired to –12 decimal Example: For b[15:0] = 0x4C00 = 'b0100_1100_0000_0000 Value = $19456 \cdot 2^{-12} = 4.75$ From "PMBus Spec Part II: Paragraph 8.2"
Reg	Register	PMBus data field b[15:0] or b[7:0]. Bit field meaning is defined in detailed PMBus Command Description.
I16	Integer Word	PMBus data field b[15:0] Value = Y where Y = b[15:0] is a 16 bit unsigned integer Example: For b[15:0] = 0x9807 = 'b1001_1000_0000_0111 Value = 38919 (decimal)
CF	Custom Format	Value is defined in detailed PMBus Command Description. This is often an unsigned or two's complement integer scaled by an MFR specific constant.
ASC	ASCII Format	A variable length string of text characters conforming to ISO/IEC 8859-1 standard.

APPLICATIONS INFORMATION

The Typical Application on the back page is a basic LTC3883 application circuit. The LTC3883 can be configured to use either DCR (inductor resistance) sensing or low value resistor sensing. The choice between the two current sensing schemes is largely a design trade-off between cost, power consumption and accuracy. DCR sensing is becoming popular because it saves expensive current sensing resistors and is more power efficient, especially in high current applications. The LTC3883 can nominally account for the temperature dependency of the DCR sensing element. The accuracy of the current reading and current limit are typically limited by the accuracy of the DCR resistor (accounted for in the IOUT_CAL_GAIN parameter of the LTC3883). Thus current sensing resistors provide the most accurate current sense and limiting for the application. Other external component selection is driven by the load requirement, and begins with the selection of R_{SENSE} (if R_{SENSE} is used) and inductor value. Next, the power MOSFETs are selected. Then the input and output capacitors are selected. Finally the current limit is selected. All of these components and ranges are required to be determined prior to calculating the external compensation components. The current limit range is required because the two ranges (25mV to 50mV vs 37.5mV to 75mV) have different EA gains set with bit 7 of the MFR_PWM_MODE_LTC3883 command. The voltage RANGE bit also modifies the loop gain and impacts the compensation network set with bits 5, 6 of MFR_PWM_CONFIG_LTC3883. All other programmable parameters do not affect the loop gain, allowing parameters to be modified without impact to the transient response to load.

CURRENT LIMIT PROGRAMMING

The LTC3883 has two ranges of current limit programming and a total of eight levels within each range. Refer to the IOUT_OC_FAULT_LIMIT section of the PMBus commands. Within each range the error amp gain is fixed, resulting in constant loop gain. The LTC3883 will account for the DCR of the inductor and automatically update the current limit as the inductor temperature changes. The temperature coefficient of the DCR is stored in the MFR_IOUT_TC command.

For the best current limit accuracy, use the 75mV setting. The 25mV setting will allow for the use of very low DCR inductors or sense resistors, but at the expense of current limit accuracy. Keep in mind this operation is on a cycle-by-cycle basis and is only a function of the peak inductor current. The average inductor current is monitored by the ADC converter and can provide a warning if too much average output current is detected. The overcurrent fault is detected when the ITH voltage hits the maximum value. The digital processor within the LTC3883 provides the ability to either ignore the fault, shut down and latch off or shut down and retry indefinitely (hiccup). Refer to the overcurrent portion of the Operation section for more detail.

I_{SENSE}^+ AND I_{SENSE}^- PINS

The I_{SENSE}^+ and I_{SENSE}^- pins are the inputs to the current comparator and the A/D. The common mode input voltage range of the current comparators is 0V to 5.5V. Both the SENSE pins are high impedance inputs with small base currents typically less than 1µA. When the I_{SENSE} pin voltages are between 0V and 1.4V, the small base currents flow out of the SENSE pins. When the I_{SENSE} pin voltages are greater than 1.4V, the base currents flow into the I_{SENSE} pins. The high impedance inputs to the current comparators allow accurate DCR sensing. Do not float these pins during normal operation.

Filter components mutual to the I_{SENSE} lines should be placed close to the IC. The positive and negative traces should be routed differentially and Kelvin connected to the current sense element, see Figure 17. A non-Kelvin connection elsewhere can add parasitic inductance and capacitance to the current sense element, degrading the information at the sense terminals and making the programmed current limit unpredictable. In a PolyPhase system, poor placement of the sensing element will result in sub-optimal current sharing between power stages. If DCR sensing is used (Figure 18a), sense resistor R1 should be placed close to the switching node to prevent noise from coupling into sensitive small-signal nodes. The capacitor

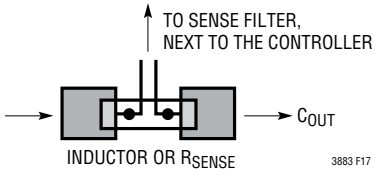

Figure 17. Optimal Sense Line Placement

APPLICATIONS INFORMATION

C1 should be placed close to the IC pins. This impedance difference can result in loss of accuracy in the current reading of the ADC. The current reading accuracy can be improved by matching the impedance of the two pins. To accomplish this add a series resistor between V_{OUT} and I_{SENSE}^- equal to R1. A capacitor of 1µF or greater should be placed in parallel with this resistor. If the peak voltage is <75mV at room temperature, R2 is not required.

LOW VALUE RESISTOR CURRENT SENSING

A typical sensing circuit using a discrete resistor is shown in Figure 18b. R_{SENSE} is chosen based on the required output current.

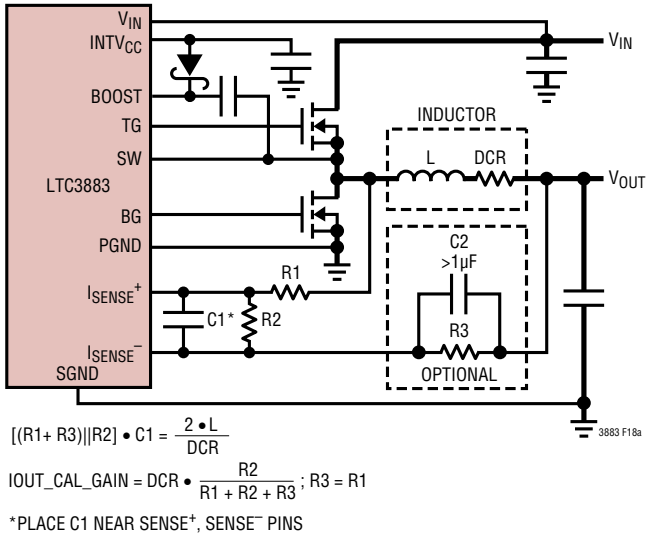

Figure 18a. Inductor DCR Current Sense Circuit

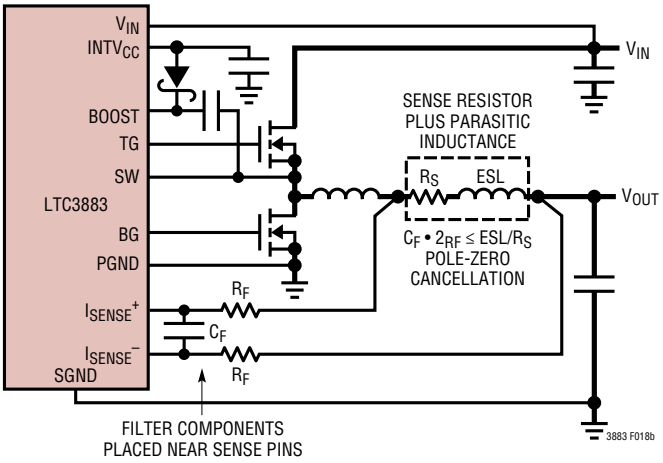

Figure 18b. Resistor Current Sense Circuit

The current comparator has a maximum threshold $V_{SENSE(MAX)}$ determined by the I_{LIMIT} setting. The input common mode range of the current comparator is 0V to 5.5V (if V_{IN} is greater than 6V). The current comparator threshold sets the peak of the inductor current, yielding a maximum average output current I_{MAX} equal to the peak value less half the peak-to-peak ripple current ΔI_L. To calculate the sense resistor value, use the equation:

$$R_{SENSE} = \frac{V_{SENSE(MAX)}}{I_{MAX} + \frac{\Delta I_L}{2}}$$

Due to possible PCB noise in the current sensing loop, the AC current sensing ripple of $\Delta V_{SENSE} = \Delta I_L \bullet R_{SENSE}$ also needs to be checked in the design to get a good signal-to-noise ratio. In general, for a reasonably good PCB layout, a 15mV minimum ΔV_{SENSE} voltage is recommended as a conservative number to start with, either for R_{SENSE} or DCR sensing applications.

For previous generation current mode controllers, the maximum sense voltage was high enough (e.g., 75mV for the LTC1628/LTC3728 family) that the voltage drop across the parasitic inductance of the sense resistor represented a relatively small error. In the new highest current density solutions; however, the value of the sense resistor can be less than 1mΩ and the peak sense voltage can be less than 20mV. In addition, inductor ripple currents greater than 50% with operation up to 1MHz are becoming more common. Under these conditions, the voltage drop across the sense resistor's parasitic inductance is no longer negligible. A typical sensing circuit using a discrete resistor is shown in Figure 18b. In previous generations of controllers, a small RC filter placed near the IC was commonly used to reduce the effects of the capacitive and inductive noise coupled in the sense traces on the PCB. A typical filter consists of two series 100Ω resistors connected to a parallel 1000pF capacitor, resulting in a time constant of 200ns.

This same RC filter with minor modifications, can be used to extract the resistive component of the current sense signal in the presence of parasitic inductance. For example, Figure 19 illustrates the voltage waveform across a 2mΩ resistor with a 2010 footprint. The waveform is the superposition of a purely resistive component and a

APPLICATIONS INFORMATION

purely inductive component. It was measured using two scope probes and waveform math to obtain a differential measurement. Based on additional measurements of the inductor ripple current and the on-time, t_{ON}, and off-time, t_{OFF}, of the top switch, the value of the parasitic inductance was determined to be 0.5nH using the equation:

$$ESL = \frac{V_{ESL(STEP)}}{\Delta I_L} \bullet \frac{t_{ON} \bullet t_{OFF}}{t_{ON} + t_{OFF}} \quad (1)$$

If the RC time constant is chosen to be close to the parasitic inductance divided by the sense resistor (L/R), the resultant waveform looks resistive, as shown in Figure 20. For applications using low maximum sense voltages, check the sense resistor manufacturer's data sheet for information about parasitic inductance. In the absence of data, measure the voltage drop directly across the sense resistor to extract the magnitude of the ESL step and use Equation 1 to determine the ESL. However, do not overfilter the signal. Keep the RC time constant less than or equal to the inductor time constant to maintain a sufficient ripple voltage on V_{RSENSE} for optimal operation of the current loop controller.

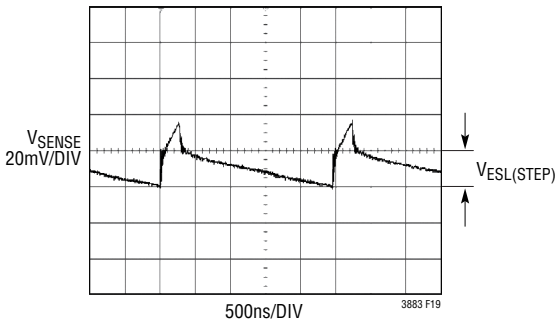

Figure 19. Voltage Measured Directly Across R_{SENSE}

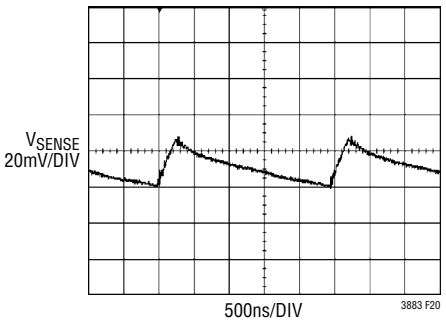

Figure 20. Voltage Measured After the R_{SENSE} Filter

INDUCTOR DCR CURRENT SENSING

For applications requiring the highest possible efficiency at high load currents, the LTC3883 is capable of sensing the voltage drop across the inductor DCR, as shown in Figure 18a. The DCR of the inductor represents the small amount of DC winding resistance of the copper, which can be less than 1mΩ for today's low value, high current inductors. In a high current application requiring such an inductor, conduction loss through a sense resistor would cost a few points of efficiency compared to DCR sensing.

If the external (R1 + R3)||R2 • C1 time constant is chosen to be exactly equal to the L/DCR time constant, assuming R1 = R3, the voltage drop across the external capacitor,C1, is equal to the drop across the inductor DCR multiplied by R2/(R1+R2+R3). R2 scales the voltage across the sense terminals for applications where the DCR is greater than the target sense resistor value. The DCR value is entered as the IOUT_CAL_GAIN in mΩ unless R2 is required. If R2 is used:

$$IOUT_CAL_GAIN = DCR \bullet \frac{R2}{R1+R2+R3}$$

If there is no need to attenuate the signal, R2 can be removed. To properly dimension the external filter components, the DCR of the inductor must be known. It can be measured using an accurate RLC meter, but the DCR tolerance is not always the same and varies with temperature. Consult the manufacturers' data sheets for detailed information. The LTC3883 will account for temperature variation if the correct parameter is entered into the MFR_IOUT_CAL_GAIN_TC command. Typically the resistance has a 3900ppm/°C coefficient.

C2 can be optimized for a flat frequency response, assuming R1 = R3 by the following equation:

$$C2 = [2R1 \bullet R2 \bullet C1\text{-}L/DCR \bullet (2R1+R2)]/R1^2$$

Using the inductor ripple current value from the Inductor Value Calculation section, the target sense resistor value is:

$$R_{SENSE(EQUIV)} = \frac{V_{SENSE(MAX)}}{I_{MAX} + \frac{\Delta I_L}{2}}$$

APPLICATIONS INFORMATION

To ensure that the application will deliver full load current over the full operating temperature range, be sure to pick the optimum I_{LIMIT} value accounting for errors in the DCR versus the MFR_IOUT_CAL_GAIN parameter entered.

Next, determine the DCR of the inductor. Where provided, use the manufacturer's maximum value, usually given at 20°C. Increase this value to account for errors in the temperature sensing element of 3°C to 5°C and any additional errors associated with the proximity of the temperature sensor element to the inductor.

C1 is usually selected to be in the range of 0.047µF to 4.7µF. This forces (R1 + R3)||R2 to be approximately 2k. Adding optional elements R3 and C2 shown in Figure 18a will minimize offset errors associated with the ISNS leakage currents. Set R3 equal to the value of R1. Set C2 to a value of 1µF or greater to ensure adequate noise filtering.

The equivalent resistance (R1 + R3)||R2 is scaled to the room temperature inductance and maximum DCR:

$$(R1+R3)\,||\,R2 = \frac{2 \bullet L}{(DCR \text{ at } 20^{\circ}C) \bullet C1}$$

The sense resistor values are:

$$R1 = R3;\ R1 = \frac{R1\,||\,R2}{RD};\ R2 = \frac{R1 \bullet RD}{1-RD}$$

The maximum power loss in R1 is related to the duty cycle, and will occur in continuous mode at the maximum input voltage:

$$P_{LOSS}R1 = \frac{(V_{IN(MAX)} - V_{OUT}) \bullet V_{OUT}}{R1}$$

Ensure that R1 has a power rating higher than this value. If high efficiency is necessary at light loads, consider this power loss when deciding whether to use DCR sensing or sense resistors. Light load power loss can be modestly higher with a DCR network than with a sense resistor due to the extra switching losses incurred through R1. However, DCR sensing eliminates a sense resistor, reducing conduction losses and provides higher efficiency at heavy loads. Peak efficiency is about the same with either method. Selecting Burst Mode operation or discontinuous mode will improve the converter efficiency at light loads regardless of the current sensing method.

To maintain a good signal-to-noise ratio for the current sense signal, use a minimum ΔV_{SENSE} of 10mV to 15mV. For a DCR sensing application, the actual ripple voltage will be determined by the equation:

$$\Delta V_{SENSE} = \frac{V_{IN} - V_{OUT}}{R1 \bullet C1} \bullet \frac{V_{OUT}}{V_{IN} \bullet f_{OSC}}$$

SLOPE COMPENSATION AND INDUCTOR PEAK CURRENT

Slope compensation provides stability in constant frequency current mode architectures by preventing sub-harmonic oscillations at high duty cycles. This is accomplished internally by adding a compensation ramp to the inductor current signal at duty cycles in excess of 35%. The LTC3883 uses a patented current limit technique that counteracts the compensating ramp. This allows the maximum inductor peak current to remain unaffected throughout all duty cycles.

INDUCTOR VALUE CALCULATION

Given the desired input and output voltages, the inductor value and operating frequency, f_{OSC}, directly determine the inductor peak-to-peak ripple current:

$$I_{RIPPLE} = \frac{V_{OUT}(V_{IN} - V_{OUT})}{V_{IN} \bullet f_{OSC} \bullet L}$$

Lower ripple current reduces core losses in the inductor, ESR losses in the output capacitors, and output voltage ripple. Thus, highest efficiency operation is obtained at the lowest frequency with a small ripple current. Achieving this, however, requires a large inductor.

A reasonable starting point is to choose a ripple current that is about 40% of $I_{OUT(MAX)}$. Note that the largest ripple current occurs at the highest input voltage. To guarantee that the ripple current does not exceed a specified maximum, the inductor should be chosen according to:

$$L \geq \frac{V_{OUT}(V_{IN} - V_{OUT})}{V_{IN} \bullet f_{OSC} \bullet I_{RIPPLE}}$$

APPLICATIONS INFORMATION

INDUCTOR CORE SELECTION

Once the inductor value is determined, the type of inductor must be selected. Core loss is independent of core size for a fixed inductor value, but it is very dependent on inductance. As the inductance increases, core losses go down. Unfortunately, increased inductance requires more turns of wire and therefore copper losses increase.

Ferrite designs have very low core loss and are preferred at high switching frequencies, so design goals can concentrate on copper loss and preventing saturation. Ferrite core materials saturate hard, which means that the inductance collapse abruptly when the peak design current is exceeded. This results in an abrupt increase in inductor ripple current and consequent output voltage ripple. Do not allow the core to saturate!

POWER MOSFET AND SCHOTTKY DIODE (OPTIONAL) SELECTION

Two external power MOSFETs must be selected for each controller in the LTC3883: one N-channel MOSFET for the top (main) switch, and one N-channel MOSFET for the bottom (synchronous) switch.

The peak-to-peak drive levels are set by the $INTV_{CC}$ voltage. This voltage is typically 5V. Consequently, logic-level threshold MOSFETs must be used in most applications. The only exception is if low input voltage is expected (V_{IN} < 5V); then, sub-logic level threshold MOSFETs ($V_{GS(TH)}$ < 3V) should be used. Pay close attention to the BV_{DSS} specification for the MOSFETs as well; most of the logic-level MOSFETs are limited to 30V or less.

Selection criteria for the power MOSFETs include the on-resistance, $R_{DS(ON)}$, Miller capacitance, C_{MILLER}, input voltage and maximum output current. Miller capacitance, C_{MILLER}, can be approximated from the gate charge curve usually provided on the MOSFET manufacturers' data sheet. C_{MILLER} is equal to the increase in gate charge along the horizontal axis while the curve is approximately flat divided by the specified change in V_{DS}. This result is then multiplied by the ratio of the application applied V_{DS} to the gate charge curve specified V_{DS}. When the IC is operating in continuous mode the duty cycles for the top and bottom MOSFETs are given by:

$$\text{Main Switch Duty Cycle} = \frac{V_{OUT}}{V_{IN}}$$

$$\text{Synchronous Switch Duty Cycle} = \frac{V_{IN} - V_{OUT}}{V_{IN}}$$

The MOSFET power dissipations at maximum output current are given by:

$$P_{MAIN} = \frac{V_{OUT}}{V_{IN}}(I_{MAX})^2(1+\delta)R_{DS(ON)} + (V_{IN})^2\left(\frac{I_{MAX}}{2}\right)(R_{DR})(C_{MILLER})\bullet \left[\frac{1}{V_{INTVCC} - V_{TH(MIN)}} + \frac{1}{V_{TH(MIN)}}\right]\bullet f_{OSC}$$

$$P_{SYNC} = \frac{V_{IN} - V_{OUT}}{V_{IN}}(I_{MAX})^2(1+\delta)R_{DS(ON)}$$

where δ is the temperature dependency of $R_{DS(ON)}$ and R_{DR} (approximately 2Ω) is the effective driver resistance at the MOSFET's Miller threshold voltage. $V_{TH(MIN)}$ is the typical MOSFET minimum threshold voltage.

Both MOSFETs have I^2R losses while the topside N-channel equation includes an additional term for transition losses, which are highest at high input voltages. For V_{IN} < 20V the high current efficiency generally improves with larger MOSFETs, while for V_{IN} > 20V the transition losses rapidly increase to the point that the use of a higher $R_{DS(ON)}$ device with lower C_{MILLER} actually provides higher efficiency. The synchronous MOSFET losses are greatest at high input voltage when the top switch duty factor is low or during a short-circuit when the synchronous switch is on close to 100% of the period.

The term (1 + δ) is generally given for a MOSFET in the form of a normalized $R_{DS(ON)}$ vs Temperature curve, but δ = 0.005/°C can be used as an approximation for low voltage MOSFETs.

APPLICATIONS INFORMATION

The optional Schottky diodes conduct during the dead time between the conduction of the two power MOSFETs. These prevent the body diodes of the bottom MOSFETs from turning on, storing charge during the dead time and requiring a reverse recovery period that could cost as much as 3% in efficiency at high V_{IN}. A 1A to 3A Schottky is generally a good compromise for both regions of operation due to the relatively small average current. Larger diodes result in additional transition losses due to their larger junction capacitance.

VARIABLE DELAY TIME, SOFT-START AND OUTPUT VOLTAGE RAMPING

The LTC3883 must enter the run state prior to soft-start. The RUN pin is released after the part initializes and V_{IN} is greater than the VIN_ON threshold. If multiple LTC3883s are used in an application, they should be configured to share the same RUN pins. They all hold their respective RUN pins low until all devices initialize and V_{IN} exceeds the VIN_ON threshold for all devices. The SHARE_CLK pin assures all the devices connected to the signal use the same time base.

After the RUN pin releases, the controller waits for the user-specified turn-on delay (TON_DELAY) prior to initiating an output voltage ramp. Multiple LTC3883s and other LTC parts can be configured to start with variable delay times. To work correctly, all devices use the same timing clock (SHARE_CLK) and all devices must share the RUN pin. This allows the relative delay of all parts to be synchronized. The actual variation in the delay will be dependent on the highest clock rate of the devices connected to the SHARE_CLK pin (all Linear Technology ICs are configured to allow the fastest SHARE_CLK signal to control the timing of all devices). The SHARE_CLK signal can be ±10% in frequency, thus the actual time delays will have proportional variance.

Soft-start is performed by actively regulating the load voltage while digitally ramping the target voltage from 0.0V to the commanded voltage set point. The rise time of the voltage ramp can be programmed using the TON_RISE command to minimize inrush currents associated with the start-up voltage ramp. The soft-start feature is disabled by setting TON_RISE to any value less than 0.250ms. The LTC3883 will perform the necessary math internally to assure the voltage ramp is controlled to the desired slope. However, the voltage slope can not be any faster than the fundamental limits of the power stage. The shorter TON_RISE time is set, the more jagged the TON_RISE ramp will appear. The number of steps in the ramp is equal to TON_RISE/0.1ms.

The LTC3883 PWM will always use discontinuous mode during the TON_RISE operation. In discontinuous mode, the bottom gate is turned off as soon as reverse current is detected in the inductor. This will allow the regulator to start up into a pre-biased load.

There is no tracking feature in the LTC3883; however, two outputs can be given the same TON_RISE and TON_DELAY times to effectively ramp up at the same time. If the RUN pin is released at the same time and both LTC3883s use the same time base, the outputs will track very closely. If the circuit is in a PolyPhase configuration, all timing parameters must be the same.

The described method of start-up sequencing is time based. For concatenated events it is possible to control the RUN pin based on the $\overline{GPIO}$ pin of a different controller. The $\overline{GPIO}$ pin can be configured to release when the output voltage of the converter is greater than the VOUT_UV_FAULT_LIMIT. It is recommended to use the deglitched V_{OUT} UV fault limit because there is little appreciable time delay between the converter crossing the UV threshold and the GPIO pin releasing. The deglitched output can be enabled by setting the MFR_GPIO_PROPAGATE_VOUT_UVUF bit in the MFR_GPIO_PROPAGATE_LTC3883 command. (Refer to the MFR section of the PMBus commands in this document). The deglitched signal may have some glitching as the V_{OUT} signal transitions through the comparator threshold. A small internal digital filter of 250µs has been added to minimize this problem. To minimize the risk of $\overline{GPIO}$ pins glitching, make the TON_RISE times less than 100ms. If unwanted transitions still occur on $\overline{GPIO}$, place a capacitor to ground on the $\overline{GPIO}$ pin to filter the waveform. The RC time-constant of the filter should be set sufficiently fast to assure no appreciable delay is incurred. A value of 300µs to 500µs will provide some additional filtering without significantly delaying the trigger event.

APPLICATIONS INFORMATION

DIGITAL SERVO MODE

For maximum accuracy in the regulated output voltage, enable the digital servo loop by asserting bit 6 of the MFR_PWM_MODE_LTC3883 command. In digital servo mode, the LTC3883 will adjust the regulated output voltage based on the ADC voltage reading. Every 90ms the digital servo loop will step the LSB of the DAC (nominally 1.375mV or 0.6875mV depending on the voltage range bit) until the output is at the correct ADC reading. At power-up this mode engages after TON_MAX_FAULT_LIMIT unless the limit is set to 0 (infinite). If the TON_MAX_FAULT_LIMIT is set to 0 (infinite), the servo begins after TON_RISE is complete and VOUT has exceeded the VOUT_UV_FAULT_LIMIT. This same point in time is when the output changes from discontinuous to the programmed mode as indicated in MFR_PWM_MODE_LTC3883 bits 0 and 1. Refer to Figure 21 for details on the VOUT waveform under time based sequencing.

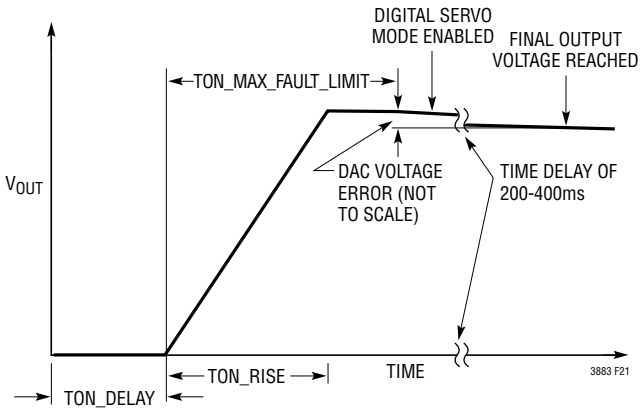

Figure 21. Timing Controlled V_{OUT} Rise

If the TON_MAX_FAULT_LIMIT is set to a value greater than 0 and the TON_MAX_FAULT_RESPONSE is set to ignore 0x00, the servo begins:

1. After the TON_RISE sequence is complete
2. After the TON_MAX_FAULT_LIMIT time is reached; and
3. After the VOUT_UV_FAULT_LIMIT has been exceed or the IOUT_OC_FAULT_LIMIT is not longer active.

If the TON_MAX_FAULT_LIMIT is set to a value greater than 0 and the TON_MAX_FAULT_RESPONSE is not set to ignore 0X00, the servo begins:

1. After the TON_RISE sequence is complete;
2. After the TON_MAX_FAULT_LIMIT time has expired and both VOUT_UV_FAULT and IOUT_OC_FAULT are not present.

The maximum rise time is limited to 1.3 seconds.

In a PolyPhase configuration it is recommended only one of the control loops have the digital servo mode enabled. This will assure the various loops do not work against each other due to slight differences in the reference circuits.

SOFT OFF (SEQUENCED OFF)

In addition to a controlled start-up, the LTC3883 also supports controlled turn-off. The TOFF_DELAY and TOFF_FALL functions are shown in Figure 22. TOFF_FALL is processed when the RUN pin goes low or if the part is commanded off. If the part faults off or $\overline{GPIO}$ is pulled low externally and the part is programmed to respond to this, the output will three-state rather than exhibiting a controlled ramp. The output will decay as a function of the load.

The output voltage will operate as shown in Figure 22 so long as the part is in forced continuous mode and the TOFF_FALL time is sufficiently slow that the power stage can achieve the desired slope. The TOFF_FALL time can only be met if the power stage and controller can sink

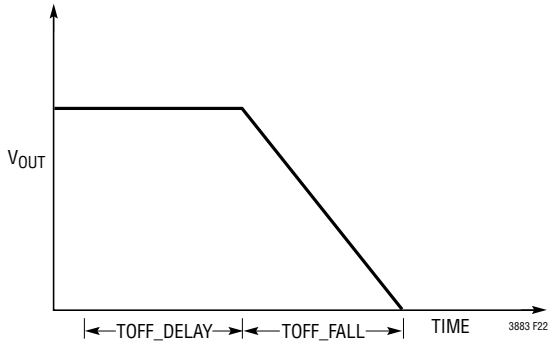

Figure 22. TOFF_DELAY and TOFF_FALL

APPLICATIONS INFORMATION

sufficient current to assure the output is a zero volts by the end of the fall time interval. If the TOFF_FALL time is set shorter than the time required to discharge the load capacitance, the output will not reach the desired zero volt state. At the end of TOFF_FALL, the controller will cease to sink current and V_{OUT} will decay at the natural rate determined by the load impedance. If the controller is in discontinuous mode, the controller will not pull negative current and the output will be pulled low by the load, not the power stage. The maximum fall time is limited to 1.3 seconds. The shorter TOFF_FALL time is set, the more jagged the TOFF_FALL ramp will appear. The number of steps in the ramp is equal to TOFF_FALL/0.1ms.

$INTV_{CC}$ REGULATOR

The LTC3883 features an NPN linear regulator that supplies power to $INTV_{CC}$ from the V_{IN} supply. $INTV_{CC}$ powers the gate drivers, V_{DD33} and much of the LTC3883 internal circuitry. The linear regulator produces 5V at the $INTV_{CC}$ pin when V_{IN} is greater than 6.5V. The regulator can supply a peak current of 100mA and must be bypassed to ground with a minimum of 1µF ceramic capacitor or low ESR electrolytic capacitor. No matter what type of bulk capacitor is used, an additional 0.1µF ceramic capacitor placed directly adjacent to the $INTV_{CC}$ and PGND pins is highly recommended. Good bypassing is needed to supply the high transient currents required by the MOSFET gate drivers. The NPN linear regulator on the LTC3883-1 is not present and an external 5V supply is needed.

High input voltage application in which large MOSFETs are being driven at high frequencies may cause the maximum junction temperature rating for the LTC3883 to be exceeded. The $INTV_{CC}$ current, of which a large percentage is due to the gate charge current, may be supplied by either the internal 5V linear regulator or from an external 5V regulator on the LTC3883-1. If the LTC3883 is used with the internal regulator activated, the power through the IC is equal to $V_{IN} \bullet I_{INTVCC}$. The gate charge current is dependent on operating frequency as discussed in the Efficiency Considerations section. The junction temperature can be estimated by using the equations in Note 2 of the Electrical Characteristics. For example, at 70°C ambient, the LTC3883 $INTV_{CC}$ current is limited to less than 52mA from a 24V supply:

$$T_J = 70°C + 52mA \bullet 24V \bullet 44°C/W = 125°C$$

To prevent the maximum junction temperature from being exceeded, a LTC3883-1 can be used. In the LTC3883-1, the $INTV_{CC}$ linear regulator is disabled and approximately 2mA of current is supplied internally from V_{IN}. Significant system efficiency and thermal gains can be realized by powering the $EXTV_{CC}$ pin from a switching 5V regulator. The V_{IN} current resulting from the gate driver and control circuitry will be scaled by a factor of:

$$\left(\frac{V_{EXTVCC}}{V_{IN}}\right)\left(\frac{1}{Efficiency}\right)$$

Tying the $EXTV_{CC}$ pin to a 5V supply (LTC3883-1 only) reduces the junction temperature in the previous example from 125°C to:

$$T_J = 70°C + 52mA \bullet 5V \bullet 44°C/W + 2mA \bullet 24V \bullet 44°C/W = 103°C$$

Do not tie $INTV_{CC}$ on the LTC3883 to an external supply because $INTV_{CC}$ will attempt to pull the external supply high and hit current limit, significantly increasing the die temperature.

For applications where V_{IN} is 5V, tie the V_{IN} and $INTV_{CC}$ pins together and tie the combined pins to the 5V input with a 1Ω or 2.2Ω resistor as shown in Figure 23. To minimize the voltage drop caused by the gate charge current a low ESR capacitor must be connected to the $V_{IN}/INTV_{CC}$ ($EXTV_{CC}$) pins. This configuration will override the $INTV_{CC}$ ($EXTV_{CC}$) linear regulator and will prevent $INTV_{CC}$ ($EXTV_{CC}$) from dropping too low. Make sure the $INTV_{CC}$ ($EXTV_{CC}$)

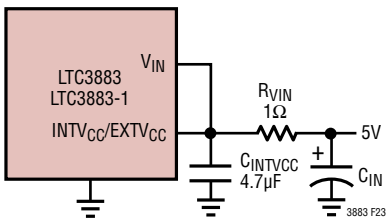

Figure 23. Setup for a 5V Input

APPLICATIONS INFORMATION

voltage exceeds the $R_{DS(ON)}$ test voltage for the MOSFETs which is typically 4.5V for logic level devices. The UVLO on $INTV_{CC}$ ($EXTV_{CC}$) is set to approximately 4V. Both the LTC3883 and LTC3883-1 are valid for this configuration.

TOPSIDE MOSFET DRIVER SUPPLY (C_B, D_B)

External bootstrap capacitors C_B connected to the BOOST pin supplies the gate drive voltages for the topside MOSFETs. Capacitor C_B in the Block Diagram is charged though external diode D_B from $INTV_{CC}$ when the SW pin is low. When one of the topside MOSFETs is to be turned on, the driver places the C_B voltage across the gate source of the desired MOSFET. This enhances the MOSFET and turns on the topside switch. The switch node voltage, SW, rises to V_{IN} and the BOOST pin follows. With the topside MOSFET on, the boost voltage is above the input supply: $V_{BOOST} = V_{IN} + V_{INTVCC}$. The value of the boost capacitor C_B needs to be 100 times that of the total input capacitance of the topside MOSFET(s). The reverse breakdown of the external Schottky diode must be greater than $V_{IN(MAX)}$. When adjusting the gate drive level, the final arbiter is the total input current for the regulator. If a change is made and the input current decreases, then the efficiency has improved. If there is no change in input current, then there is no change in efficiency.

PWM jitter has been observed in some designs operating at higher V_{IN}/V_{OUT} ratios. This jitter does not substantially affect the circuit accuracy. Referring to Figure 24, PWM jitter can be removed by inserting a series resistor with a value of 1Ω to 5Ω between the cathode of the diode and the BOOST pin. A resistor case size of 0603 or larger is recommended to reduce ESL and achieve the best results.

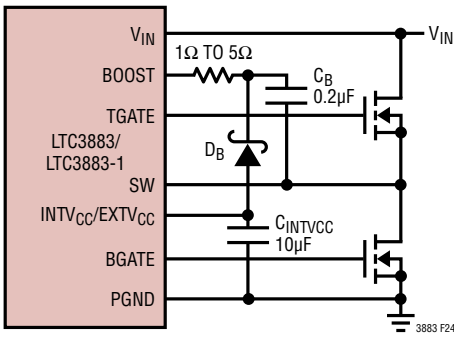

Figure 24. Boost Circuit to Minimize PWM Jitter

UNDERVOLTAGE LOCKOUT

The LTC3883 is initialized by an internal threshold-based UVLO where V_{IN} must be approximately 4V and $INTV_{CC}$/$EXTV_{CC}$, V_{DD33}, V_{DD25} must be within approximately 20% of the regulated values. In addition, V_{DD33} must be within approximately 7% of the targeted value before the RUN pin is released. After the part has initialized, an additional comparator monitors V_{IN}. The VIN_ON threshold must be exceeded before the power sequencing can begin. When V_{IN} drops below the VIN_OFF threshold, the SHARE_CLK pin will be pulled low and V_{IN} must increase above the VIN_ON threshold before the controller will restart. The normal start-up sequence will be allowed after the VIN_ON threshold is crossed. If $\overline{GPIO}$ is held low when V_{IN} is applied, $\overline{ALERT}$ will be asserted low even if the part is programmed to not assert $\overline{ALERT}$ when $\overline{GPIO}$ is held low. If I^2C communication occurs before the LTC3883 is out of reset and only a portion of the command is seen by the part, this can be interpreted as a CML fault. If a CML fault is detected, $\overline{ALERT}$ is asserted low.

It is possible to program the contents of the NVM in the application if the V_{DD33} supply is externally driven. This will activate the digital portion of the LTC3883 without engaging the high voltage sections. PMBus communications are valid in this supply configuration. If V_{IN} has not been applied to the LTC3883, bit 3 (NVM Not Initialized) in MFR_COMMON will be asserted low. If this condition is detected, the part will only respond to addresses 5A and 5B. To initialize the part issue the following set of commands: global address 0x5B command 0xBD data 0x2B followed by global address 5B command 0xBD and data 0xC4. The part will now respond to the correct address. Configure the part as desired then issue a STORE_USER_ALL. When V_{IN} is applied a MFR_RESET command must be issued to allow the PWM to be enabled and valid ADC conversions to be read.

C_{IN} AND C_{OUT} SELECTION

In continuous mode, the source current of the top MOSFET is a square wave of duty cycle $(V_{OUT})/(V_{IN})$. To prevent large voltage transients, a low ESR capacitor sized for the

APPLICATIONS INFORMATION

maximum RMS current of one channel must be used. The maximum RMS capacitor current is given by:

$$C_{IN}\ \text{Required}\ I_{RMS} \approx \frac{I_{MAX}}{V_{IN}}\left[(V_{OUT})(V_{IN}-V_{OUT})\right]^{1/2}$$

This formula has a maximum at $V_{IN} = 2V_{OUT}$, where $I_{RMS} = I_{OUT}/2$. This simple worst-case condition is commonly used for design because even significant deviations do not offer much relief. Note that capacitor manufacturers' ripple current ratings are often based on only 2000 hours of life. This makes it advisable to further derate the capacitor, or to choose a capacitor rated at a higher temperature than required. Several capacitors may be paralleled to meet size or height requirements in the design. Due to the high operating frequency of the LTC3883, ceramic capacitors can also be used for C_{IN}. Always consult the manufacturer if there is any question.

The benefit of using two LTC3883 2-phase operation can be calculated by using the equation above for the higher power controller and then calculating the loss that would have resulted if both controller channels switched on at the same time. The total RMS power lost is lower when both controllers are operating due to the reduced overlap of current pulses required through the input capacitor's ESR. This is why the input capacitor's requirement calculated above for the worst-case controller is adequate for the dual controller design. Also, the input protection fuse resistance, battery resistance, and PC board trace resistance losses are also reduced due to the reduced peak currents in a 2-phase system. The overall benefit of a multiphase design will only be fully realized when the source impedance of the power supply/battery is included in the efficiency testing. The sources of the top MOSFETs should be placed within 1cm of each other and share a common C_{IN}(s). Separating the sources and C_{IN} may produce undesirable voltage and current resonances at V_{IN}.

A small (0.1µF to 1µF) bypass capacitor between the chip V_{IN} pin and ground, placed close to the LTC3883, is also suggested. A 2.2Ω – 10Ω resistor placed between C_{IN} (C1) and the V_{IN} pin provides further isolation between the two LTC3883s.

The selection of C_{OUT} is driven by the effective series resistance (ESR). Typically, once the ESR requirement is satisfied, the capacitance is adequate for filtering. The output ripple (ΔV_{OUT}) is approximated by:

$$\Delta V_{OUT} \approx I_{RIPPLE}\left(ESR+\frac{1}{8fC_{OUT}}\right)$$

where f is the operating frequency, C_{OUT} is the output capacitance and I_{RIPPLE} is the ripple current in the inductor. The output ripple is highest at maximum input voltage since I_{RIPPLE} increases with input voltage.

FAULT CONDITIONS

The LTC3883 $\overline{\text{GPIO}}$ pin is configurable to indicate a variety of faults including OV, UV, OC, OT, timing faults, peak overcurrent faults. In addition the $\overline{\text{GPIO}}$ pin can be pulled low by external sources indicating a fault in some other portion of the system. The fault response is configurable and allows the following options:

- Ignore
- Shut Down Immediately—Latch Off
- Shut Down Immediately—Retry Indefinitely at the Time Interval Specified in MFR_RETRY_DELAY

Refer to the PMBus section of the data sheet and the PMBus specification for more details.

The OV response is automatic. If an OV condition is detected, TG goes low and BG is asserted.

Fault logging is available on the LTC3883. The fault logging is configurable to automatically store data when a fault occurs that causes the unit to fault off. The header portion of the fault logging table contains peak values. It is possible to read these values at any time. This data will be useful while troubleshooting the fault.

If the LTC3883 internal temperature is in excess of 85°C, the write into the NVM is not recommended. The data will still be held in RAM, unless the 3.3V supply UVLO threshold is reached. If the die temperature exceeds 130°C all NVM communication is disabled until the die temperature drops below 120°C.

APPLICATIONS INFORMATION

OPEN-DRAIN PINS

The LTC3883 has the following open-drain pins:

3.3V Pins

1. $\overline{\text{GPIO}}$
2. SYNC
3. SHARE_CLK
4. PGOOD

5V Pins (5V pins operate correctly when pulled to 3.3V.)

1. RUN
2. $\overline{\text{ALERT}}$
3. SCL
4. SDA

All the above pins have on-chip pull-down transistors that can sink 3mA at 0.4V. The low threshold on the pins is 1.4V; thus, plenty of margin on the digital signals with 3mA of current. For 3.3V pins, 3mA of current is a 1.1k resistor. Unless there are transient speed issues associated with the RC time constant of the resistor pull-up and parasitic capacitance to ground, a 10k resistor or larger is generally recommended.

For high speed signals such as the SDA, SCL and SYNC, a lower value resistor may be required. The RC time constant should be set to 1/3 to 1/5 the required rise time to avoid timing issues. For a 100pF load and a 400kHz PMBus communication rate, the rise time must be less than 300ns. The resistor pull-up on the SDA and SCL pins with the time constant set to 1/3 the rise time:

$$R_{PULLUP} = \frac{t_{RISE}}{3 \bullet 100pF} = 1k$$

The closest 1% resistor value is 1k. Be careful to minimize parasitic capacitance on the SDA and SCL pins to avoid communication problems. To estimate the loading capacitance, monitor the signal in question and measure how long it takes for the desired signal to reach approximately 63% of the output value. This is one time constant.

The SYNC pin has an on-chip pull-down transistor with the output held low for nominally 500ns. If the internal oscillator is set for 500kHz and the load is 100pF and a 3x time constant is required, the resistor calculation is as follows:

$$R_{PULLUP} = \frac{2\mu s - 500ns}{3 \bullet 100pF} = 5k$$

The closest 1% resistor is 4.99k.

If timing errors are occurring or if the SYNC frequency is not as fast as desired, monitor the waveform and determine if the RC time constant is too long for the application. If possible reduce the parasitic capacitance. If not reduce the pull up resistor sufficiently to assure proper timing.

PHASE-LOCKED LOOP AND FREQUENCY SYNCHRONIZATION

The LTC3883 has a phase-locked loop (PLL) comprised of an internal voltage-controlled oscillator (VCO) and a phase detector. The PLL is locked to the falling edge of the SYNC pin. The phase relationship between the PWM controller and the falling edge of SYNC is controlled by the lower 3 bits of the MFR_PWM_CONFIG_LTC3883 command. For PolyPhase applications, it is recommended all the phases be spaced evenly. Thus for a 2-phase system the signals should be 180° out of phase and a 4-phase system should be spaced 90°.

The phase detector is an edge-sensitive digital type that provides a known phase shift between the external and internal oscillators. This type of phase detector does not exhibit false lock to harmonics of the external clock.

The output of the phase detector is a pair of complementary current sources that charge or discharge the internal filter network. The PLL lock range is guaranteed between 250kHz and 1MHz. Nominal parts will have a range beyond this; however, operation to a wider frequency range is not guaranteed.

The PLL has a lock detection circuit. If the PLL should lose lock during operation, bit 4 of the STATUS_MFR_SPECIFIC command is asserted and the $\overline{\text{ALERT}}$ pin is pulled low. The fault can be cleared by writing a 1 to the bit. If the user does not wish to see the PLL_FAULT, even if a synchronization clock is not available at power up, bit 3 of the MFR_CONFIG_ALL_LTC3883 command must be asserted.

APPLICATIONS INFORMATION

If the SYNC signal is not clocking in the application, the PLL will run at the lowest free running frequency of the VCO. This will be well below the intended PWM frequency of the application and may cause undesirable operation of the converter.

If the PWM signal appears to be running at too high a frequency, monitor the SYNC pin. Extra transitions on the falling edge will result in the PLL trying to lock on to noise versus the intended signal. Review routing of digital control signals and minimize crosstalk to the SYNC signal to avoid this problem. Multiple LTC3883s are required to share the SYNC pin in PolyPhase configurations, for other configurations it is optional. If the SYNC pin is shared between LTC3883s, only one LTC3883 can be programmed with a frequency output. All the other LTC3883s must be programmed to external clock.

MINIMUM ON-TIME CONSIDERATIONS

Minimum on-time, $t_{ON(MIN)}$, is the smallest time duration that the LTC3883 is capable of turning on the top MOSFET. It is determined by internal timing delays and the gate charge required to turn off the top MOSFET. Low duty cycle applications may approach this minimum on-time limit and care should be taken to ensure that:

$$t_{ON(MIN)} < \frac{V_{OUT}}{V_{IN} \bullet f_{OSC}}$$

If the duty cycle falls below what can be accommodated by the minimum on-time, the controller will begin to skip cycles. The output voltage will continue to be regulated, but the ripple voltage and current will increase.

The minimum on-time for the LTC3883 is approximately 90ns, with reasonably good PCB layout, minimum 30% inductor current ripple and at least 10mV – 15mV ripple on the current sense signal. The minimum on-time can be affected by PCB switching noise in the voltage and current loop. As the peak current sense voltage decreases, the minimum on-time gradually increases to 130ns. This is of particular concern in forced continuous applications with low ripple current at light loads. If the duty cycle drops below the minimum on-time limit in this situation, a significant amount of cycle skipping can occur with correspondingly larger current and voltage ripple.

INPUT CURRENT SENSE AMPLIFIER

The LTC3883 input current sense amplifier can sense the supply current into the V_{IN} pin using an internal sense resistor as well as the power stage current using an external sense resistor. High frequency noise caused by the discontinuous input current can cause input current measurement errors. The noise will be the greatest in high current applications and at large step-down ratios. Care must be taken to mitigate the noise seen at the input current sense amplifier inputs and supply. This can be accomplished by careful layout as well as filtering at the V_{IN}, V_{IN_SNS} and I_{INSNS} pins. The V_{IN} pin should be filtered with a resistor and a ceramic capacitor located as close to the V_{IN} pin as possible. The supply side of the V_{IN} pin filter should be Kelvin connected to the supply side of the R_{IINSNS} resistor. A 3Ω resistor should be sufficient for most applications. The resistor will cause an IR voltage drop from the supply to the V_{IN} pin due to the current flowing into the V_{IN} pin. To compensate for this voltage drop, the MFR_RVIN command value should be set to the nominal resistor value. The LTC3883 will multiply the MFR_READ_ICHIP measurement value by the user defined MFR_RVIN value and add this voltage to the measured voltage at the V_{IN} pin. Therefore READ_VIN = V_{VIN_PIN} + (MFR_READ_ICHIP • MFR_RVIN), so that this command will return the value of the voltage at the supply side of the V_{IN} pin filter. If no V_{IN} filter element is used, set MFR_RVIN = 0.

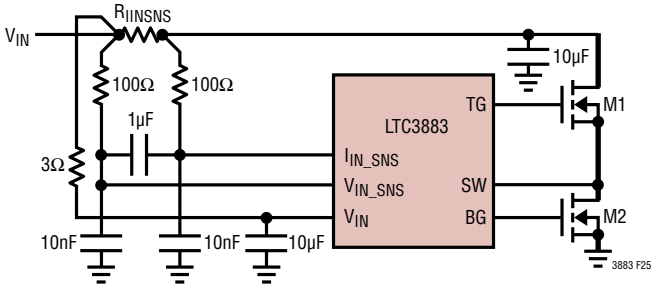

Figure 25. Low Noise Input Current Sense Circuit

APPLICATIONS INFORMATION

Both the V_{IN_SNS} and I_{IN_SNS} pins need to be filtered with a 1% tolerance 100Ω resistor to R_{IINSNS} and a 10nF ceramic capacitor to GND. A larger value capacitor to GND may be used for additional filtering. Because the input current sense amplifier gain is calibrated for 100Ω filter resistors, any other filter resistance value will cause an input current measurement error. The amplifier input filter networks should be located as close to the V_{IN_SNS} and I_{IN_SNS} pins as possible.

The capacitor from the intermediate bus to ground should be a low ESR ceramic capacitor. It should be placed as close as possible to the drain of the top gate MOSFET to supply high frequency transient input current. This will help prevent noise from the top gate MOSFET current from feeding into the input current sense amplifier inputs and supply.

If the input current sense amplifier is not used, short the V_{IN}, V_{IN_SNS}, and I_{IN_SNS} pins together.

RCONFIG (EXTERNAL RESISTOR CONFIGURATION PINS)

The LTC3883 default NVM is programmed to respect the RCONFIG pins. If a user wishes the output voltage, PWM frequency and phasing to be set without programming the part or purchasing specially programmed parts, the FREQ_CFG, VOUT_CFG, and VTRIM_CFG pins can be used to establish these parameters. To save external components, the user may float the FREQ_CFG, VOUT_CFG, and VTRIM_CFG pins which will cause the LTC3883 to default to the respective parameters stored in NVM. The ASEL pin should always be programmed with a resistor divider to safeguard against a lost device address by the host.

To externally program the RCONFIG pins connect a resistor divider between the V_{DD25} and GND of the LTC3883. The RCONFIG pins are only monitored at initial power up and during a reset so modifying their values perhaps using an A/D after the part is powered will have no effect. 1% resistors or better must be used to assure proper operation. Noisy clock signals should not be routed near these pins.

Voltage Selection

When an output voltage is set using the RCONFIG pins on VOUT_CFG and VTRIM_CFG, the following parameters are set as a percentage of the output voltage:

- VOUT_OV_FAULT_LIMIT +10%
- VOUT_OV_WARN_LIMIT +7.5%
- VOUT_MAX +7.5%
- VOUT_MARGIN_HIGH +5%
- POWER_GOOD_ON –7%
- POWER_GOOD_OFF –8%
- VOUT_MARGIN_LOW –5%
- VOUT_UV_WARN_LIMIT –6.5%
- VOUT_UV_FAULT_LIMIT –7%

Refer to Tables 12 and 13 to set the output voltage using RCONFIG pins VOUT_CFG and VTRIM_CFG. RTOP is connected between VDD25 and the pin and RBOTTOM is connected between the pin and SGND. 1% resistors must be used to assure proper operation.

The output voltage set point is equal to:

$$V_{SETPOINT} = VOUT_CFG + VTRIM_CFG$$

For example, if the VOUT_CFG pin has R_{TOP} equal to 24.9k and R_{BOTTOM} equal to 4.32k, and VTRIM_CFG is set with R_{TOP} not inserted and R_{BOTTOM} equal to 0Ω:

$$V_{SETPOINT} = 1.1V – 0.099V \text{ or } 1.001V$$

If odd values of output voltage are required from 0.5V to 3.3V, use only the VOUT_CFG resistor divider, the V_{TRIM} pin can be open or shorted to V_{DD25}. If the output set point is 5V, the VOUT_CFG must have R_{TOP} equal to 10k and R_{BOTTOM} equal to 23.2k and VTRIM_CFG must have R_{TOP} equal to 20k and R_{BOTTOM} equal to 11k.

Programming the output voltage with the RCONFIG pins will automatically set the part to low or high range. Any V_{OUT} voltage at 2.5V or below will be set to low range. All voltages above 2.5V will be set to high range.

APPLICATIONS INFORMATION

Table 12. VOUT_CFG

R_{TOP} (kΩ)	R_{BOTTOM} (kΩ)	V_{OUT} (V)
0 or Open	Open	NVM
10	23.2	See VTRIM
10	15.8	3.3
16.2	20.5	3.1
16.2	17.4	2.9
20	17.8	2.7
20	15	2.5
20	12.7	2.3
20	11	2.1
24.9	11.3	1.9
24.9	9.09	1.7
24.9	7.32	1.5
24.9	5.76	1.3
24.9	4.32	1.1
30.1	3.57	0.9
30.1	1.96	0.7
Open	0	0.5

Table 13. VTRIM_CFG

R_{TOP} (kΩ)	R_{BOTTOM} (kΩ)	V_{TRIM} (mV) CHANGE TO V_{SET} VOLTAGE	V_{OUT} (V) IF V_{OUT} HAS 10kΩ/23.3kΩ
0 or Open	Open	0	
10	23.2	99	
10	15.8	86.625	
16.2	20.5	74.25	
16.2	17.4	61.875	
20	17.8	49.5	
20	15	37.125	5.5
20	12.7	24.75	5.25
20	11	12.375	5
24.9	11.3	–12.375	4.75
24.9	9.09	–24.75	4.5
24.9	7.32	–37.125	4.25
24.9	5.76	–49.5	4
24.9	4.32	–61.875	3.75
30.1	3.57	–74.25	3.63
30.1	1.96	–86.625	3.5
Open	0	–99	3.46

Table 14. FREQ_CFG (Phase Based on Falling Edge of SYNC)

R_{TOP} (kΩ)	R_{BOTTOM} (kΩ)	FREQUENCY (kHz)	θ_{SYNC} TO θ_0	DESCRIPTION
0 or Open	Open	NVM	NVM	NVM
10	23.2	250	0	2-Phase
10	15.8	250	120	3-Phase
16.2	20.5	250	180	2-Phase
16.2	17.4	425	0	2-Phase
20	17.8	425	120	3-Phase
20	15	425	180	2-Phase
20	12.7	500	0	2-Phase
24.9	11.3	500	180	2-Phase
24.9	9.09	575	0	2-Phase
24.9	7.32	575	120	3-Phase
24.9	5.76	575	180	2-Phase
24.9	4.32	650	0	2-Phase
30.1	3.57	650	120	3-Phase
30.1	1.96	650	180	2-Phase
Open	0	External Clock	0	2-Phase

APPLICATIONS INFORMATION

Frequency and Phase Selection Using RCONFIG

The frequency and phase commands are linked if they are set using the RCONFIG pins. If PMBus commands are used the two parameters are independent. The SYNC pins must be shared in poly-phase configurations where multiple LTC3883s are used to produce the output. If the configuration is not PolyPhase the SYNC pins do not have to be shared. If the SYNC pins are shared between LTC3883s only one SYNC pin can be set as a frequency output, all other SYNC pins must be set to External Clock.

For example in a 2-phase configuration clocked at 425kHz, one of the LTC3883s must be set to the desired frequency and phase and the other LTC3883 must be set to External Clock. All phasing is with respect to the falling edge of SYNC.

LTC3883 Chip 1 set the frequency to 425kHz with 180° phase shift:

R_{TOP} = 20kΩ and R_{BOTTOM} = 15kΩ

LTC3883 Chip 2 set the frequency to External Clock with 0° phase shift:

R_{TOP} = open and R_{BOTTOM} = 0Ω

Frequencies of 350kHz, 750kHz and 1000kHz can only be set using NVM programming. If a 6-phase configuration is desired, NVM programming will give optimal phasing. All other configurations in frequency and phasing can be achieved using the FREQ_CFG pin.

Address Selection Using RCONFIG

The LTC3883 address may be selected using a combination of the address stored in NVM and the ASEL pin. The three MSBs of the device address are set by the three MSBs stored in NVM, and four LSBs of the device address are set by the ASEL pin. This allows 16 different LTC3883s on a single board with one programmed address in NVM.

If the address stored in NVM is 0x4F, then the part address can be set from 0x40 to 0x4F using ASEL. (The standard default address is 0x4F). Do not set any part address to 0x5A or 0x5B because these are global addresses and all parts will respond to them.

To choose address 0x40 R_{TOP} is open and R_{BOTTOM} = 0Ω

To choose address 0x45 R_{TOP} = 24.9k and R_{BOTTOM} = 7.32k

To choose address 0x4E R_{TOP} = 10.0k and R_{BOTTOM} = 15.8k

Table 15A[1]. LTC3883 MFR_ADDRESS Command Examples Expressing Both 7- or 8-Bit Addressing

DESCRIPTION	HEX DEVICE ADDRESS 7 BIT	8 BIT	BIT 7	BIT 6	BIT 5	BIT 4	BIT 3	BIT 2	BIT 1	BIT 0	R/W
Rail[4]	0x5A	0xB4	0	1	0	1	1	0	1	0	0
Global[4]	0x5B	0xB6	0	1	0	1	1	0	1	1	0
Default	0x4F	0x9E	0	1	0	0	1	1	1	1	0
Example 1	0x60	0xC0	0	1	1	0	0	0	0	0	0
Example 2	0x61	0xC2	0	1	1	0	0	0	0	1	0
Disabled[2,3,5]			1	0	0	0	0	0	0	0	0

Note 1: This table can be applied to the MFR_RAIL_ADDRESS command as well as the MFR_ADDRESS command.

Note 2: A disabled value in one command does not disable the device, nor does it disable the Global address.

Note 3: A disabled value in one command does not inhibit the device from responding to device addresses specified in other commands.

Note 4: It is not recommended to write the value 0x00, 0x0C (7 bit), or 0x5A or 0x5B (7 bit) to the MFR_ADDRESS or the MFR_RAIL_ADDRESS commands.

Note 5: To disable the address enter 0x80 in the MFR_ADDRESS command. The 0x80 is greater than the 7-bit address field, disabling the address.

Table 15. ASEL

R_{TOP} (kΩ)	R_{BOTTOM} (kΩ)	SLAVE ADDRESS	LSB HEX
0 or Open	Open	NVM	
10	23.2	NVM (3MSBs)_1111	F
10	15.8	NVM (3MSBs)_1110	E
16.2	20.5	NVM (3MSBs)_1101	D
16.2	17.4	NVM (3MSBs)_1100	C
20	17.8	NVM (3MSBs)_1011	B
20	15	NVM (3MSBs)_1010	A
20	12.7	NVM (3MSBs)_1001	9
20	11	NVM (3MSBs)_1000	8
24.9	11.3	NVM (3MSBs)_0111	7
24.9	9.09	NVM (3MSBs)_0110	6
24.9	7.32	NVM (3MSBs)_0101	5
24.9	5.76	NVM (3MSBs)_0100	4
24.9	4.32	NVM (3MSBs)_0011	3
30.1	3.57	NVM (3MSBs)_0010	2
30.1	1.96	NVM (3MSBs)_0001	1
Open	0	NVM (3MSBs)_0000	0

APPLICATIONS INFORMATION

EFFICIENCY CONSIDERATIONS

The percent efficiency of a switching regulator is equal to the output power divided by the input power times 100%. It is often useful to analyze individual losses to determine what is limiting the efficiency and which change would produce the most improvement. Percent efficiency can be expressed as:

%Efficiency = 100% – (L1 + L2 + L3 + ...)

where L1, L2, etc. are the individual losses as a percentage of input power.

Although all dissipative elements in the circuit produce losses, four main sources usually account for most of the losses in LTC3883 circuits: 1) IC V_{IN} current, 2) $INTV_{CC}$ regulator current, 3) I^2R losses, 4) Topside MOSFET transition losses.

1. The V_{IN} current is the DC supply current given in the Electrical Characteristics table, which excludes MOSFET driver and control currents. V_{IN} current typically results in a small (<0.1%) loss.

2. $INTV_{CC}$ current is the sum of the MOSFET driver and control currents. The MOSFET driver current results from switching the gate capacitance of the power MOSFETs. Each time a MOSFET gate is switched from low to high to low again, a packet of charge dQ moves from $INTV_{CC}$ to ground. The resulting dQ/dt is a current out of $INTV_{CC}$ that is typically much larger than the control circuit current. In continuous mode, $I_{GATECHG} = f(Q_T + Q_B)$, where Q_T and Q_B are the gate charges of the topside and bottom side MOSFETs.

   On the LTC3883-1, supplying $EXTV_{CC}$ from an output-derived source will scale the V_{IN} current required for the driver and control circuits by a factor of:

$$\left(\frac{V_{EXTVCC}}{V_{IN}}\right)\left(\frac{1}{\text{Efficiency}}\right)$$

   For example, in a 20V to 5V application, 10mA of $INTV_{CC}$ current results in approximately 2.5mA of V_{IN} current. This reduces the mid-current loss from 10% or more (if the driver was powered directly from V_{IN}) to only a few percent.

3. I^2R losses are predicted from the DC resistances of the fuse (if used), MOSFET, inductor, current sense resistor. In continuous mode, the average output current flows through L and R_{SENSE}, but is "chopped" between the topside MOSFET and the synchronous MOSFET. If the two MOSFETs have approximately the same $R_{DS(ON)}$, then the resistance of one MOSFET can simply be summed with the resistances of L and R_{SENSE} to obtain I^2R losses. For example, if each $R_{DS(ON)} = 10m\Omega$, $R_L = 10m\Omega$, $R_{SENSE} = 5m\Omega$, then the total resistance is $25m\Omega$. This results in losses ranging from 2% to 8% as the output current increases from 3A to 15A for a 5V output, or a 3% to 12% loss for a 3.3V output. Efficiency varies as the inverse square of V_{OUT} for the same external components and output power level. The combined effects of increasingly lower output voltages and higher currents required by high performance digital systems is not doubling but quadrupling the importance of loss terms in the switching regulator system!

4. Transition losses apply only to the topside MOSFET(s), and become significant only when operating at high input voltages (typically 15V or greater). Transition losses can be estimated from:

   Transition Loss = $(1.7)\ V_{IN}^2\ I_{O(MAX)}\ C_{RSS}\ f$

Other "hidden" losses such as copper trace and internal battery resistances can account for an additional 5% to 10% efficiency degradation in portable systems. It is very important to include these "system" level losses during the design phase. The internal battery and fuse resistance losses can be minimized by making sure that C_{IN} has adequate charge storage and very low ESR at the switching frequency. A 25W supply will typically require a minimum of 20µF to 40µF of capacitance having a maximum of $20m\Omega$ to $50m\Omega$ of ESR. The LTC3883 2-phase architecture typically halves this input capacitance requirement over competing solutions. Other losses including Schottky conduction losses during dead time and inductor core losses generally account for less than 2% total additional loss.

CHECKING TRANSIENT RESPONSE

The regulator loop response can be checked by looking at the load current transient response. Switching regulators take several cycles to respond to a step in DC (resistive)

APPLICATIONS INFORMATION

load current. When a load step occurs, V_{OUT} shifts by an amount equal to ΔI_{LOAD} (ESR), where ESR is the effective series resistance of C_{OUT}. ΔI_{LOAD} also begins to charge or discharge C_{OUT} generating the feedback error signal that forces the regulator to adapt to the current change and return V_{OUT} to its steady-state value. During this recovery time V_{OUT} can be monitored for excessive overshoot or ringing, which would indicate a stability problem. The availability of the I_{TH} pin not only allows optimization of control loop behavior but also provides a DC-coupled and AC-filtered closed-loop response test point. The DC step, rise time and settling at this test point truly reflects the closed loop response. Assuming a predominantly second order system, phase margin and/or damping factor can be estimated using the percentage of overshoot seen at this pin. The bandwidth can also be estimated by examining the rise time at the pin. The I_{TH} external components shown in the Typical Application circuit will provide an adequate starting point for most applications. The only two programmable parameters that affect loop gain are the voltage range, bits 5 and 6 of the MFR_PWM_CONFIG_LTC3883 command and the current range, bit 7 of the MFR_PWM_MODE_LTC3883 command. Be sure to establish these settings prior to compensation calculation.

The I_{TH} series R_C-C_C filter sets the dominant pole-zero loop compensation. The values can be modified slightly (from 0.5 to 2 times their suggested values) to optimize transient response once the final PC layout is done and the particular output capacitor type and value have been determined. The output capacitors need to be selected because the various types and values determine the loop gain and phase. An output current pulse of 20% to 80% of full-load current having a rise time of 1µs to 10µs will produce output voltage and I_{TH} pin waveforms that will give a sense of the overall loop stability without breaking the feedback loop. Placing a power MOSFET with a resistor to ground directly across the output capacitor and driving the gate with an appropriate signal generator is a practical way to produce to a load step. The MOSFET + R_{SERIES} will produce output currents approximately equal to V_{OUT}/R_{SERIES}. R_{SERIES} values from 0.1Ω to 2Ω are valid depending on the current limit settings and the programmed output voltage. The initial output voltage step resulting from the step change in output current may not be within the bandwidth of the feedback loop, so this signal cannot be used to determine phase margin. This is why it is better to look at the I_{TH} pin signal which is in the feedback loop and is the filtered and compensated control loop response. The gain of the loop will be increased by increasing R_C and the bandwidth of the loop will be increased by decreasing C_C. If R_C is increased by the same factor that C_C is decreased, the zero frequency will be kept the same, thereby keeping the phase shift the same in the most critical frequency range of the feedback loop. The output voltage settling behavior is related to the stability of the closed-loop system and will demonstrate the actual overall supply performance.

A second, more severe transient is caused by switching in loads with large (>1µF) supply bypass capacitors. The discharged bypass capacitors are effectively put in parallel with C_{OUT}, causing a rapid drop in V_{OUT}. No regulator can alter its delivery of current quickly enough to prevent this sudden step change in output voltage if the load switch resistance is low and it is driven quickly. If the ratio of C_{LOAD} to C_{OUT} is greater than 1:50, the switch rise time should be controlled so that the load rise time is limited to approximately 25 • C_{LOAD}. Thus a 10µF capacitor would require a 250µs rise time, limiting the charging current to about 200mA.

PolyPhase Configuration

When configuring a PolyPhase rail with multiple LTC3883s/LTC3880s, the user must share the SYNC, ITH, SHARE_CLK, GPIO, and $\overline{\text{ALERT}}$ pins of both parts. Be sure to use pull-up resistors on GPIO, SHARE_CLK and $\overline{\text{ALERT}}$. One of the part's SYNC pin must be set to the desired switching frequency, and all other FREQUENCY_SWITCH commands must be set to External Clock. If an external oscillator is provided, set the FREQUENCY_SWITCH command to External Clock for all parts. The relative phasing of all the channels should be spaced equally. The MFR_RAIL_ADDRESS of all the devices should be set to the same value.

When connecting a PolyPhase rail with LTC3883s, connect the V_{IN} pins of the 3883s directly back to the supply voltage through the V_{IN} pin filter networks. Refer to the Typical Application circuit: High Efficiency 500kHz 2-Phase 1.8V Step-Down Converter with Sense Resistors.

APPLICATIONS INFORMATION

When connecting a 3-phase LTC3883/LTC3880, the V_{IN} pin and power stage of the LTC3880 should be connected to the downstream side of the LTC3883 input current sense resistor. This allows the user to measure the total input current of the rail. Refer to the Typical Application circuit: High Efficiency 3-Phase 350kHz 1.8V Step-Down Converter with Input Current Sense. The inductor DCR for all three inductors of LTC3883/LTC3880 application can be calculated. The DCR auto calibration routine can be performed on the LTC3883 phase by shutting down the other two phases. The DCR of the inductors of the LTC3880 phases can be calculated using the READ_IIN value of the LTC3883, and the MFR_READ_IIN of the LTC3880 phases. The user can shut down the other two phases and adjust the IOUT_CAL_GAIN value of the respective LTC3880 phase so that the active phase's MFR_READ_IIN = READ_IIN of the LTC3883.

The user may also calibrate the DCR of all three inductors by only shutting down one phase at a time and leaving the other two phases active, however the DCR auto calibration routine cannot be used for the LTC3883 phase. The IOUT_CAL_GAIN value of all the inductors should be set to the nominal DRC value, DCR_NOM prior to beginning the procedure.

During the procedure, the circuit must be in a steady-state load condition, with the converter in CCM and sufficient load current to create a 6mV average signal across the R_{IINSNS} sense resistor, as well as 6mV across the output current sense network. First, the user needs to record the values of READ_IIN of the LTC3883 as well as the READ_IOUT for all three phases. These values are referred to as READ_IIN_A, READ_IOUT_1A, READ_IOUT_2A, and READ_IOUT_3A.

Next, phase 1 should be shut off and the values for READ_IIN of the LTC3883 and the READ_IOUT for the two active phases need to be recorded. These values are referred to as READ_IIN_B, READ_IOUT_2B, and READ_IOUT_3B.

To calculate the DCR of phase 1:

Verify that READ_IIN_A = READ_IIN_B

The actual current of phase 1, IOUT_1A is calculated by:

IOUT_1A = READ_IIN_A – READ_IIN_A • {(READ_IOUT_2A + READ_IOUT_3A)/(READ_IOUT_2B + READ_IOUT_3B)

The actual DCR of the phase 1 inductor is calibrated to the correct value by:

DCR_CAL = DCR_NOM • (IOUT_1A/READ_IOUT_A)

The user then needs to update the IOUT_CAL_GAIN command value with the calibrated value of inductor DCR, DCR_CAL.

The above procedure can then be repeated to determine the inductor DCR for phases 2 and 3.

Reference the subsection titled Inductor DCR Auto Calibration in the Applications Information section for further detail regarding the operating conditions that must be met to accurately calculate the inductor DCR.

PC BOARD LAYOUT CHECKLIST

When laying out the printed circuit board, the following checklist should be used to ensure proper operation of the IC. These items are also illustrated graphically in the layout diagram of Figure 26. Figure 27 illustrates the current waveforms present in the various branches of the synchronous regulator operating in the continuous mode. Check the following in your layout:

1. Is the top N-channel MOSFET, M1, located within 1cm of C_{IN}?
2. Are ground and power ground kept separate? The combined IC ground pin and the ground return of C_{INTVCC} must return to the combined C_{OUT} (–) terminals. The I_{TH} trace should be as short as possible. The path formed by the top N-channel MOSFET, Schottky diode and the C_{IN} capacitor should have short leads and PC trace lengths. The output capacitor (–) terminals should be connected as close as possible to the (–) terminals of the input capacitor by placing the capacitors next to each other and away from the Schottky loop described above.
3. Are the I_{SENSE}^+ and I_{SENSE}^- leads routed together with minimum PC trace spacing? The filter capacitor between I_{SENSE}^+ and I_{SENSE}^- should be as close as possible to

APPLICATIONS INFORMATION

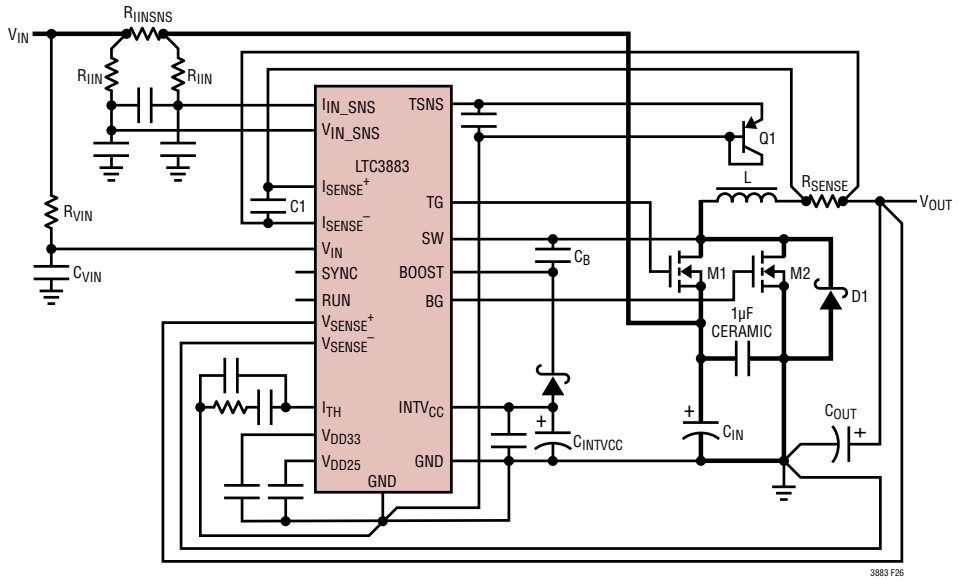

Figure 26. Recommended Printed Circuit Layout Diagram

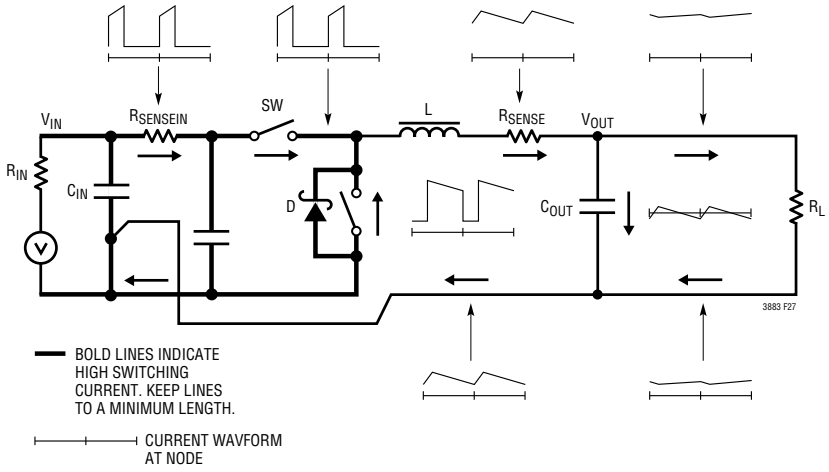

Figure 27. Branch Current Waveforms

the IC. Ensure accurate current sensing with Kelvin connections at the sense resistor or inductor, whichever is used for current sensing.

4. Is the $INTV_{CC}$ decoupling capacitor connected close to the IC, between the $INTV_{CC}$ and the power ground pins? This capacitor carries the MOSFET driver current peaks. An additional 1µF ceramic capacitor placed immediately next to the $INTV_{CC}$ and PGND pins can help improve noise performance substantially.

5. Keep the switching node (SW), top gate node (TG), and boost node (BOOST) away from sensitive small-signal nodes, especially from the voltage and current sensing feed-back pins. All of these nodes have very large and fast moving signals and therefore should be kept on the "output side" of the LTC3883 and occupy minimum PC trace area. If DCR sensing is used, place the top resistor (Figure 18a, R1) close to the switching node.

APPLICATIONS INFORMATION

6. Use a modified "star ground" technique: a low impedance, large copper area central grounding point on the same side of the PC board as the input and output capacitors with tie-ins for the bottom of the $INTV_{CC}$ decoupling capacitor, the bottom of the voltage feedback resistive divider and the GND pin of the IC.
7. Are the V_{IN_SNS} and I_{IN_SNS} filters Kelvin connected to the $R_{SENSEIN}$ sense resistor? This will prevent the PCB trace resistance from causing errors in the input current measurement. These traces should be as short as possible and routed away from any noisy nodes such as the switching or boost nodes.
8. Is the V_{IN} filter Kelvin connected to the input side of the $R_{SENSEIN}$ resistor? This can help improve the noise performance of the input current sense amplifier by reducing the voltage transients between the amplifier inputs and amplifier supply caused by the discontinuous power stage current.

PC BOARD LAYOUT DEBUGGING

It is helpful to use a DC-50MHz current probe to monitor the current in the inductor while testing the circuit. Monitor the output switching node (SW pin) to synchronize the oscilloscope to the internal oscillator and probe the actual output voltage as well. Check for proper performance over the operating voltage and current range expected in the application. The frequency of operation should be maintained over the input voltage range down to dropout and until the output load drops below the low current operation threshold—typically 10% of the maximum designed current level in Burst Mode operation.

The duty cycle percentage should be maintained from cycle to cycle in a well-designed, low noise PCB implementation. Variation in the duty cycle at a subharmonic rate can suggest noise pickup at the current or voltage sensing inputs or inadequate loop compensation. Overcompensation of the loop can be used to tame a poor PC layout if regulator bandwidth optimization is not required.

Reduce V_{IN} from its nominal level to verify operation of the regulator in dropout. Check the operation of the undervoltage lockout circuit by further lowering V_{IN} while monitoring the outputs to verify operation.

Investigate whether any problems exist only at higher output currents or only at higher input voltages. If problems coincide with high input voltages and low output currents, look for capacitive coupling between the BOOST, SW, TG, and possibly BG connections and the sensitive voltage and current pins. The capacitor placed across the current sensing pins needs to be placed immediately adjacent to the pins of the IC. This capacitor helps to minimize the effects of differential noise injection due to high frequency capacitive coupling. If problems are encountered with high current output loading at lower input voltages, look for inductive coupling between C_{IN}, Schottky and the top MOSFET components to the sensitive current and voltage sensing traces. In addition, investigate common ground path voltage pickup between these components and the GND pin of the IC.

DESIGN EXAMPLE

As a design example for a medium current regulator, assume V_{IN} = 12V nominal, V_{IN} = 20V maximum, V_{OUT} = 3.3V, I_{MAX} = 15A and f = 500kHz (see Figure 28).

The regulated output is established by the VOUT_COMMAND stored in NVM or placing the following resistor divider between VDD25 the RCONFIG pin and SGND:

1. VOUT_CFG, R_{TOP} = 10k, R_{BOTTOM} = 15.8 k
2. VTRIM_CFG, Open

The frequency and phase are set by NVM or by setting the resistor divider between VDD25 FREQ_CFG and GND with R_{TOP} = 20k and R_{BOTTOM} = 12.7k. The address is set to XF where X is the MSB stored in NVM.

The following parameters are set as a percentage of the output voltage if the resistor configuration pins are used to determined output voltage:

- VOUT_OV_FAULT_LIMIT ..... +10%
- VOUT_OV_WARN_LIMIT ..... +7.5%
- VOUT_MAX ..... +7.5%
- VOUT_MARGIN_HIGH ..... +5%
- POWER_GOOD_ON ..... –7%
- POWER_GOOD_OFF ..... –8%
- VOUT_MARGIN_LOW ..... –5%
- VOUT_UV_WARN_LIMIT ..... –6.5%
- VOUT_UV_FAULT_LIMIT ..... –7%

APPLICATIONS INFORMATION

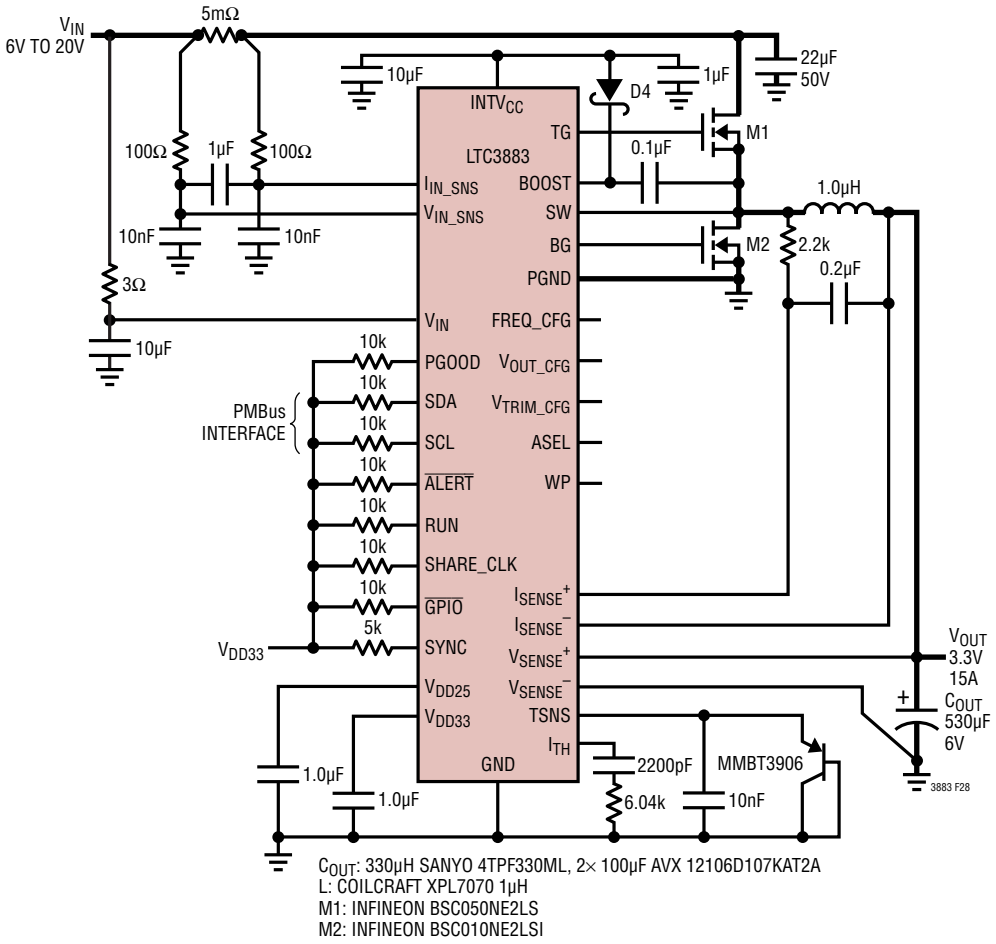

Figure 28. High Efficiency 500kHz 3.3V Step-Down Converter

All other user defined parameters must be programmed into the NVM. The GUI can be utilized to quickly set up the part with the desired operating parameters.

The inductance values are based on a 35% maximum ripple current assumption (5.25A). The highest value of ripple current occurs at the maximum input voltage:

$$L = \frac{V_{OUT}}{f \bullet \Delta I_{L(MAX)}}\left[1 - \frac{V_{OUT}}{V_{IN(MAX)}}\right]$$

The controller will require 1.05µH. The nearest standard value is 1µH. At the nominal input the ripple will be:

$$\Delta I_{L(NOM)} = \frac{V_{OUT}}{f \bullet L}\left[1 - \frac{V_{OUT}}{V_{IN(NOM)}}\right]$$

The ripple will be 4.79A (32%). The peak inductor current will be the maximum DC value plus one-half the ripple current or 17.39A. The minimum on time occurs at the maximum V_{IN}, and should not be less than 90ns:

$$t_{ON(MIN)} = \frac{V_{OUT}}{V_{IN(MAX)} \bullet f} = \frac{1.8V}{20V(500kHz)} = 180ns$$

The Vishay IHLP4040DZ-11 1µH (2.3mΩ DCR_{TYP} at 25°C) is the chosen inductor.

Assuming the temperature measurement of the inductor temperature is accurate and C1 is set to 0.2µF, R_D is infinite and removed from the equations.

$$R1 = \frac{L}{(DCR \text{ at } 25°C) \bullet C1} = \frac{1\mu H}{2.5m\Omega \bullet 0.2\mu F} = 1.37k$$

APPLICATIONS INFORMATION

The maximum power loss in R0 is related to the duty cycle, and will occur in continuous mode at the maximum input voltage:

$$P_{LOSS}R1 = \frac{(V_{IN(MAX)} - V_{OUT}) \bullet V_{OUT}}{R1}$$
$$= \frac{(20 - 1.8) \bullet 1.8}{1.37k} = 23.91mW$$

The current limit will be set 20% higher than the peak value to assure variation in components and noise in the system do not limit the average current.

$$V_{ILIMIT} = I_{PEAK} \bullet R_{DCR(MAX)} = 17.39A \bullet 2.5m\Omega = 43mV$$

The closest V_{ILIMIT} setting is 42.9mV or 46.4mV. The values are entered with the IOUT_OC_FAULT_LIMIT command. Based on expected variation and measurement in the lab across the sense capacitor the user can determine the optimal setting.

The power dissipation on the topside MOSFET can be easily estimated. Choose a M1: INFINEON BSC050NE2LS topside MOSFET. $R_{DS(ON)}$ = 5.7mΩ, C_{MILLER} = 35pF. At maximum input voltage with T estimated = 50°C and a bottom side MOSFET a M2: INFINEON BSC010NE2LSI, $R_{DS(ON)}$ = 1.1mΩ:

$$P_{MAIN} = \frac{1.8V}{20V} \bullet (17.25)^2 \bullet \left[1 + (0.005)(50°C - 25°C)\right]$$
$$\bullet\, 5.7m\Omega + (20V)^2 (8.695A) \bullet \left(\frac{1}{5 - 2.3} + \frac{1}{2.3}\right)$$
$$(35pF)(500kHz) = 0.221W$$

The loss in the bottom side MOSFET is:

$$P_{SYNC} = \frac{(20V - 1.8V)}{20V} \bullet (17.25A)^2 \bullet$$
$$\left[1 + (0.005)(50°C - 25°C)\right] \bullet 1.1m\Omega$$
$$= 0.335W$$

Both MOSFETS have I^2R losses while the P_{MAIN} equation includes an additional term for transition losses, which are highest at high input voltages.

C_{IN} is chosen for an RMS current rating of:

$$C_{IN}\ \text{Required}\ I_{RMS} = \frac{17.25}{20}\left[(1.8) \bullet (20 - 1.8)\right]^{1/2}$$
$$= 4.9A$$

at temperature. C_{OUT} is chosen with an ESR of 0.006Ω for low output ripple. The output ripple in continuous mode will be highest at the maximum input voltage. The output voltage ripple due to ESR is

$$V_{ORIPPLE} = R(\Delta I_L) = 0.006\Omega \bullet 5.5A = 33mV.$$

CONNECTING THE USB TO I²C/SMBus/PMBus CONTROLLER TO THE LTC3883 IN SYSTEM

The LTC USB to I^2C/SMBus/PMBus controller can be interfaced to the LTC3883 on the user's board for programming, telemetry and system debug. The controller, when used in conjunction with LTpowerPlay, provides a powerful way to debug an entire power system. Faults are quickly diagnosed using telemetry, fault status commands and the fault log. The final configuration can be quickly developed and stored to the LTC3883 EEPROM.

Figure 29 illustrates the application schematic for powering, programming and communication with one or more LTC3883s via the LTC I^2C/SMBus/PMBus controller regardless of whether or not system power is present. If system power is not present the dongle will power the LTC3883 through the V_{DD33} supply pin. To initialize the part when V_{IN} is not applied and the V_{DD33} pin is powered use global address 0x5B command 0xBD data 0x2B followed by address 0x5B command 0xBD data 0xC4. The part can now be communicated with, and the project file updated. To write the updated project file to the NVM issue a STORE_USER_ALL command. When VIN is applied, a MFR_RESET must be issued to allow the PWM to be enabled and valid ADCs to be read.

Because of the controllers limited current sourcing capability, only the LTC3883s, their associated pull-up resistors and the I^2C pull-up resistors should be powered from the ORed 3.3V supply. In addition any device sharing the I^2C bus connections with the LTC3883 should not have body diodes between the SDA/SCL pins and their respective

APPLICATIONS INFORMATION

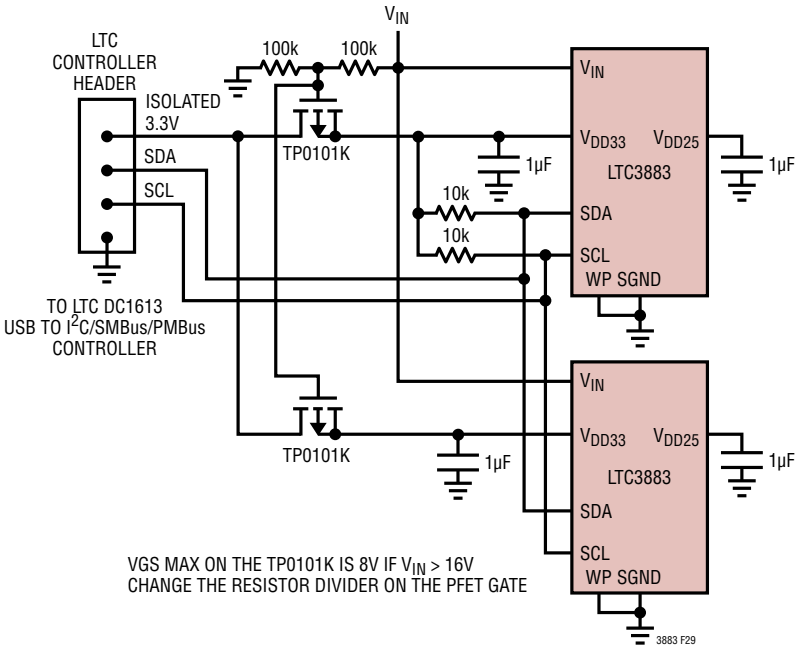

Figure 29. LTC Controller Connection

V_{DD} node because this will interfere with bus communication in the absence of system power. If V_{IN} is applied the dongle will not supply the LTC3883s on the board. It is recommended the RUN pins be held low to avoid providing power to the load until the part is fully configured.

The LTC controller I^2C connections are opto-isolated from the PC USB. The 3.3V from the controller and the LTC3883 V_{DD33} pin must be driven to each LTC3883 with a separate PFET. If V_{IN} is not applied, the V_{DD33} pins can be in parallel because the on-chip LDO is off. The controller 3.3V current limit is 100mA but typical V_{DD33} currents are under 15mA. The V_{DD33} does back drive the $INTV_{CC}/EXTV_{CC}$ pin. Normally this is not an issue if V_{IN} is open.

INDUCTOR DCR AUTO CALIBRATION

Using the DC resistance of the inductor as a current shunt element has several advantages—no additional power loss, lower circuit complexity and cost. However any error between the specified nominal inductor DCR value and the actual DCR value will cause a proportional error in the peak current limit, as well as the output current read-back value. The LTC3883 can calibrate the inductor DCR value to compensate for the tolerance from its typical value. Setting bit 3 of the MFR_PWM_MODE_3883 command will start the calibration procedure. To successfully complete the calibration procedure, the PWM must be enabled, the DUTY_CYCLE value must be at least 3%, the READ_IIN value must be at least 10mA, and the calibrated IOUT_CAL_GAIN must be with ±30% of the uncalibrated IOUT_CAL_GAIN value. If any of the above conditions are not met, bit 0 of the STATUS_CML command will be set, and the value of IOUT_CAL_GAIN will not be changed.

During the inductor DCR calibration the supply voltage, output voltage, and load current must be in a steady state condition for 180ms during the command execution to ensure accurate calibration. The load current should be sufficiently large to create at least a 6mV average signal across the R_{IINSNS} sense resistor as well as 6mV across the output current sense network in order to ensure that the READ_IIN and READ_IOUT values used in the DCR calibration calculation are within 1% TUE. The inductor DCR is calibrated by multiplying the measured READ_IIN value by the measured READ_DUTY_CYCLE value to obtain a calculated output current. The LTC3883 then updates the IOUT_CAL_GAIN value so that the measured READ_IOUT value matches the calculated output current value that is based on power stage input current and duty cycle, so that READ_IOUT • DUTY_CYCLE = READ_IIN.

APPLICATIONS INFORMATION

ACCURATE DCR TEMPERATURE COMPENSATION

Using the DC resistance of the inductor as a current shunt element has several advantages—no additional power loss, lower circuit complexity and cost. However, the strong temperature dependence of the inductor resistance and the difficulty in measuring the exact inductor core temperature introduce errors in the current measurement. For copper, a change of inductor temperature of only 1°C corresponds to approximately 0.39% current gain change. Figure 30 shows a DC/DC converter sample layout (right) and its corresponding thermal image (left). The converter is providing 1.8V, 1.5A to the output load.

Heat dissipation in the inductor under high load conditions creates transient and steady state thermal gradients between the inductor and the temperature sensor, and the sensed temperature does not accurately represent the inductor core temperature. This temperature gradient is clearly visible in the thermal image of Figure 30. In addition, transient heating/cooling effects have to be accounted for in order to reduce the transient errors introduced when load current changes are faster than heat transfer time constants of the inductor. Both of these problems are addressed by introducing two additional parameters: the thermal resistance θ_{IS} from the inductor core to the on-board temperature sensor, and the inductor thermal time constant τ. The thermal resistance θ_{IS} [°C/W], is used to calculate the steady-state difference between the sensed temperature T_S and the internal inductor temperature T_I for a given power dissipated in the inductor P_I:

$$T_I - T_S = \theta_{IS}\, P_I = \theta_{IS}\, V_{DCR}\, I_{OUT}$$

The additional temperature rise is used for a more accurate estimate of the inductor DC resistance R_I:

$$R_I = R0\,(1 + \alpha\,[T_S - T_{REF} + \theta_{IS}\, V_{DCR}\, I_{OUT}])$$

In the equations above, V_{DCR} is the inductor DC voltage drop, I_{OUT} is the RMS value of the output current, R0 is the inductor DC resistance at the reference temperature T_{REF} and α is the temperature coefficient of the resistance. Since most inductors are made of copper, we can expect a temperature coefficient close to α_{CU} = 3900ppm/°C. For a given α, the remaining parameters θ_{IS} and R0 can be calibrated at a single temperature using only two load currents:

$$R0 = \frac{(R2-R1)(P2+P1)-(R2+R1)(P2-P1)}{\alpha(T2-T1)(P2+P1)-(P2-P1)(2+\alpha[T1+T2-2T_{REF}])}$$

$$\theta_{IS} = \frac{1}{\alpha R0} \bullet \frac{\alpha(R1+R2)(T2-T1)-(R2-R1)(2+\alpha[T1+T2-2T_{REF}]}{\alpha(T2-T1)(P2+P1)-(P2-P1)(2+\alpha[T1+T2-2T_{REF}]}$$

The inductor resistance, $R_K = V_{DCR(K)}/I_{OUT(K)}$, power dissipation $P_K = V_{DCR(K)}\, I_{OUT(K)}$ and the sensed temperature T_K, (K = 1, 2) are recorded for each load current. To increase

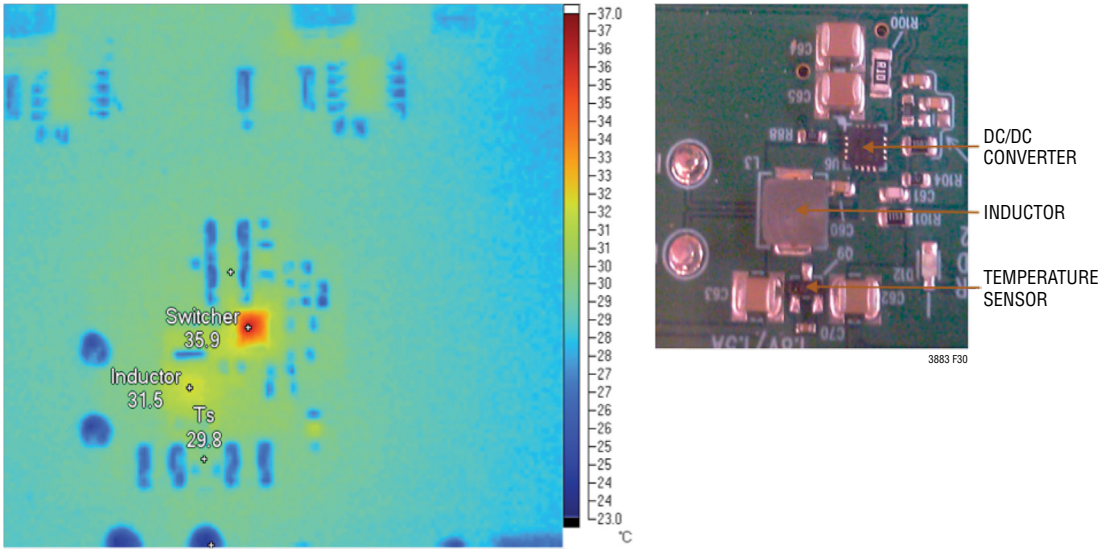

Figure 30. Thermal Image and Layout Photo

APPLICATIONS INFORMATION

the accuracy in calculating θ_{IS}, the two load currents should be chosen around I_1 = 10% and I_2 = 90% of the current range of the system.

The inductor thermal time constant τ models the first order thermal response of the inductor and allows accurate DCR compensation during load transients. During a transition from low-to-high load current, the inductor resistance increases due to the self-heating. If we apply a single load step from the low current I_1 to the higher current I_2, the voltage across the inductor will change instantaneously from I_1R1 to I_2R1 and then slowly approach I_2R2. Here R1 is the steady-state resistance at the given temperature and load current I_1, and R2 is the slightly higher DC resistance at I_2, due to the inductor self-heating. Note that the electrical time constant τ_{EL} = L/R is several orders of magnitude shorter than the thermal one, and "instantaneous" is relative to the thermal time constant. The two settled regions give us the data sets (I_1, T1, R1, P1) and (I_2, T2, R2, P2) and the 2-point calibration technique (1.3-1.4) is used to extract the steady-state parameters θ_{IS} and R0 (given a previously characterized average α). The relative current error calculated using the steady-state expression (1.2) will peak immediately after the load step, and then decay to zero with the inductor thermal time constant τ.

$$\frac{\Delta I}{I}(t) = \alpha \theta_{IS} (V2I_2 - V1I_1) e^{-t/\tau}$$

The time constant τ is calculated from the slope of the best-fit line y = ln(ΔI/I) = a1 + a2t:

$$\tau = -\frac{1}{a2}$$

In summary, a single load current step is all that is needed to calibrate the DCR current measurement. The stable portions of the response give us the thermal resistance θ_{IS} and nominal DC resistance R0, and the settling characteristic is used to measure the inductor thermal time constant τ.

To get the best performance, the temperature sensor has to be as close as possible to the inductor and away from other significant heat sources. For example in Figure 30, the bipolar sense transistor is close to the inductor and away from the switcher. Connecting the collector of the PNP to the local power ground plane assures good thermal contact to the inductor, while the base and emitter should be routed to the LTC3883 separately, and the base connected to the signal ground close to LTC3883.

LTpowerPlay: AN INTERACTIVE GUI FOR DIGITAL POWER

LTpowerPlay is a powerful Windows-based development environment that supports Linear Technology digital power ICs including the LTC3883. The software supports a variety of different tasks. LTpowerPlay can be used to evaluate Linear Technology ICs by connecting to a demo board or the user application. LTpowerPlay can also be used in an offline mode (with no hardware present) in order to build multiple IC configuration files that can be saved and re-loaded at a later time. LTpowerPlay provides unprecedented diagnostic and debug features. It becomes a valuable diagnostic tool during board bring-up to program or tweak the power system or to diagnose power issues when bring up rails. LTpowerPlay utilizes Linear Technology's USB-to-I^2C/SMBus/PMBus controller to communication with one of the many potential targets including the DC1778A demo board, the DC1890A socketed programming board, or a customer target system. The software also provides an automatic update feature to keep the revisions current with the latest set of device drivers and documentation. A great deal of context sensitive help is available with LTpowerPlay along with several tutorial demos. Complete information is available at http://www.linear.com/ltpowerplay.

PMBus COMMUNICATION AND COMMAND PROCESSING

The LTC3883/LTC3883-1 have a one deep buffer to hold the last data written for each supported command prior to processing as shown in Figure 32; Write Command Data Processing. When the part receives a new command from the bus, it copies the data into the Write Command Data Buffer, indicates to the internal processor that this command data needs to be fetched, and converts the command to its internal format so that it can be executed.

Two distinct parallel blocks manage command buffering and command processing (fetch, convert, and execute) to ensure the last data written to any command is never lost.

APPLICATIONS INFORMATION

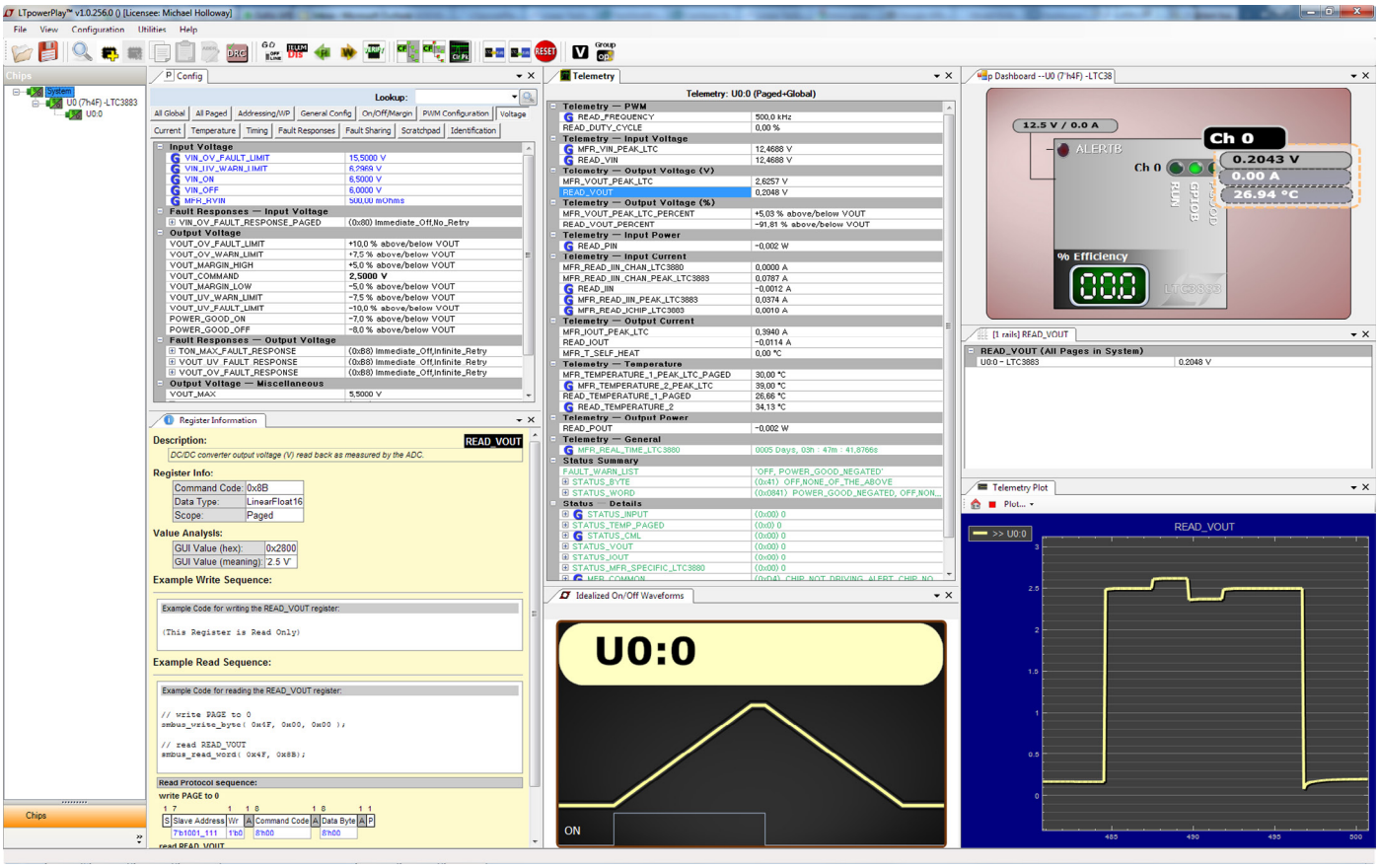

Figure 31. LTpowerPlay Screen Shot

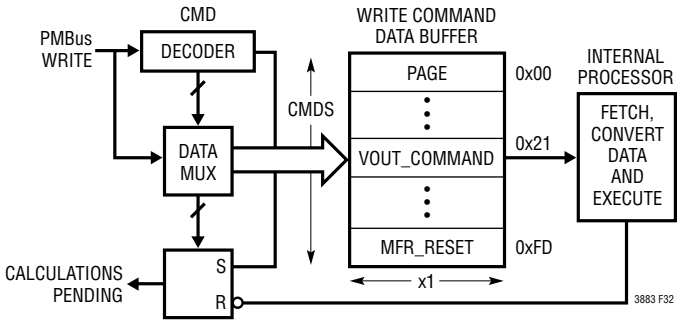

Figure 32. Write Command Data Processing

Command data buffering handles incoming PMBus writes by storing the command data to the Write Command Data Buffer and marking these commands for future processing. The internal processor runs in parallel and handles the sometimes slower task of fetching, converting and executing commands marked for processing.

Some computationally intensive commands (e.g., timing parameters, temperatures, voltages and currents) have internal processor execution times that may be long relative to PMBus timing. If the part is busy processing a command, and new command(s) arrive, execution may be delayed or processed in a different order than received. The part indicates when internal calculations are in process via bit 5 of MFR_COMMON ('calculations not pending'). When the part is busy calculating, bit 5 is cleared. When this bit is set, the part is ready for another command. An example polling loop is provided in Figure 33 which ensures that commands are processed in order while simplifying error handling routines.

```
// wait until bits 6, 5, and 4 of MFR_COMMON are all set
do
{
        mfrCommonValue = PMBUS_READ_BYTE(0xEF);
        partReady = (mfrCommonValue & 0x70) == 0x70;
}while(!partReady)
```

Figure 33. Example of a Command Write of VOUT_COMMAND

APPLICATIONS INFORMATION

When the part receives a new command while it is busy, it will communicate this condition using standard PMBus protocol. Depending on part configuration it may either NACK the command or return all ones (0xFF) for reads. It may also generate a BUSY fault and $\overline{\text{ALERT}}$ notification, or stretch the SCL clock low. For more information refer to PMBus Specification v1.1, Part II, Section 10.8.7 and SMBus v2.0 section 4.3.3. Clock stretching can be enabled by asserting bit 1 of MFR_CONFIG_ALL_LTC3883. Clock stretching will only occur if enabled and the bus communication speed exceeds 100kHz.

PMBus busy protocols are well accepted standards, but can make writing system level software somewhat complex. The part provides three 'hand shaking' status bits which reduce complexity while enabling robust system level communication.

The three hand shaking status bits are in the MFR_COMMON command. When the part is busy executing an internal operation, it will clear bit 6 of MFR_COMMON ('chip not busy'). When the part is busy specifically because it is in a transitional V_{OUT} state (margining hi/lo, power off/on, moving to a new output voltage set point, etc.) it will clear bit 4 of MFR_COMMON ('output not in transition'). When internal calculations are in process, the part will clear bit 5 of MFR_COMMON ('calculations not pending'). These three status bits can be polled with a PMBus read byte of the MFR_COMMON command until all three bits are set. A command immediately following the status bits being set will be accepted without NACKing or generating a BUSY fault/ALERT notification. The part can NACK commands for other reasons, however, as required by the PMBus spec (for instance, an invalid command or data). An example of a robust command write algorithm for the VOUT_COMMAND register is provided in Figure 31.

It is recommended that all command writes (write byte, write word, etc.) be preceded with a polling loop to avoid the extra complexity of dealing with busy behavior and unwanted ALERTB notification. A simple way to achieve this is to create a SAFE_WRITE_BYTE() and SAFE_WRITE_WORD() subroutine. The above polling mechanism allows your software to remain clean and simple while robustly communicating with the part. For a detailed discussion of these topics and other special cases please refer to the application note TBD "Implementing Robust PMBus System Software" located at www.linear.com/designtools/app_notes.

When communicating using bus speeds at or below 100kHz, the polling mechanism shown here provides a simple solution that ensures robust communication without clock stretching. At bus speeds in excess of 100kHz, it is strongly recommended that the part be configured to enable clock stretching. This requires a PMBus master that supports clock stretching. System software that detects and properly recovers from the standard PMBus NACK/BUSY faults as described in the PMBus Specification v1.1, Part II, Section 10.8.7 is required to communicate above 100kHz without clock stretching. Clock stretching will not enable the LTC3883 to communicate properly when the bus speed exceeds the specified 400kHz maximum frequency. The LTC3880 is not recommended in applications where the PMBus speed exceeds 400kHz.

PMBus COMMAND DETAILS

ADDRESSING AND WRITE PROTECT

COMMAND NAME	CMD CODE	DESCRIPTION	TYPE	DATA FORMAT	UNITS	NVM	DEFAULT VALUE
PAGE	0x00	Provides integration with multi-page PMBus devices.	R/W Byte	Reg			0x00
WRITE_PROTECT	0x10	Level of protection provided by the device against accidental changes.	R/W Byte	Reg		Y	0x00
MFR_ADDRESS	0xE6	Sets the 7-bit I^2C address byte.	R/W Byte	Reg		Y	0x4F
MFR_RAIL_ADDRESS	0xFA	Common address for PolyPhase outputs to adjust common parameters.	R/W Byte	Reg		Y	0x80

PAGE

The LTC3883 only supports a PAGE value of 0x00 or 0xFF. Any other value will generate a CML fault. The page command is included to provide integration with multi-page PMBus devices. There are no restrictions as to what commands can be written or read when PAGE is set to 0xFF.

WRITE_PROTECT

The WRITE_PROTECT command is used to control writing to the LTC3883 device. This command does not indicate the status of the WP pin which is defined in the MFR_COMMON command. The WP pin takes precedence over the value of this command unless the WRITE_PROTECT command is more stringent.

BYTE	MEANING
0x80	Disable all writes except to the WRITE_PROTECT, PAGE, MFR_EE_UNLOCK, and STORE_USER_ALL command.
0x40	Disable all writes except to the WRITE_PROTECT, PAGE, MFR_EE_UNLOCK, MFR_CLEAR_PEAKS, STORE_USER_ALL, OPERATION and CLEAR_FAULTS command. Individual fault bits can be cleared by writing a 1 to the respective bits in the STATUS commands.
0x20	Disable all writes except to the WRITE_PROTECT, OPERATION, MFR_EE_UNLOCK, MFR_CLEAR_PEAKS, CLEAR_FAULTS, PAGE, ON_OFF_CONFIG, VOUT_COMMAND and STORE_USER_ALL. Individual fault bits can be cleared by writing a 1 to the respective bits in the STATUS commands.
0x10	Reserved, must be 0
0x08	Reserved, must be 0
0x04	Reserved, must be 0
0x02	Reserved, must be 0
0x01	Reserved, must be 0

Enable writes to all commands when WRITE_PROTECT is set to 0x00.

If WP pin is high, PAGE, OPERATION, MFR_CLEAR_PEAKS, MFR_EE_UNLOCK, WRITE_PROTECT and CLEAR_FAULTS commands are supported. Individual fault bits can be cleared by writing a 1 to the respective bits in the STATUS commands.

PMBus COMMAND DETAILS

MFR_ADDRESS

The MFR_ADDRESS command byte sets the 7 bits of the PMBus slave address for this device.

Setting this command to a value of 0x80 disables device addressing. The GLOBAL device address, 0x5A and 0x5B, cannot be deactivated. If RCONFIG is set to ignore, the ASEL pin is still used to determine the LSB of the channel address. If the ASEL pin is open, the LTC3883 will use the address value stored in NVM.

This command has one data byte.

MFR_RAIL_ADDRESS

The MFR_RAIL_ADDRESS command enables direct device address access to the PAGE activated channel. The value of this command should be common to all devices attached to a single power supply rail.

The user should only perform command writes to this address. If a read is performed from this address and the rail devices do not respond with EXACTLY the same value, the LTC3883 will detect bus contention and may set a CML communications fault.

Setting this command to a value of 0x80 disables rail device addressing for the channel.

This command has one data byte.

GENERAL CONFIGURATION COMMANDS

COMMAND NAME	CMD CODE	DESCRIPTION	TYPE	DATA FORMAT	UNITS	NVM	DEFAULT VALUE
MFR_CHAN_CONFIG_LTC3883	0xD0	Configuration bits that are channel specific.	R/W Byte	Reg		Y	0x1F
MFR_CONFIG_ALL_LTC3883	0xD1	General configuration bits.	R/W Byte	Reg		Y	0x09

MFR_CHAN_CONFIG_LTC3883

General purpose configuration command common to multiple LTC products.

BIT	MEANING
7	Reserved
6	Reserved
5	Reserved
4	Disable RUN Low. When asserted the RUN pin is not pulsed low if commanded OFF
3	Short Cycle. When asserted the output will immediate off if commanded ON while waiting for TOFF_DELAY or TOFF_FALL. TOFF_MIN of 120mS is honored then the part will command ON.
2	SHARE_CLOCK control. If SHARE_CLOCK is held low, the output is disabled
1	No $\overline{\text{GPIO}}$ $\overline{\text{ALERT}}$, $\overline{\text{ALERT}}$ is not pulled low if $\overline{\text{GPIO}}$ is pulled low externally. Assert this bit if either POWER_GOOD or VOUT_UVUF are propagated on $\overline{\text{GPIO}}$.
0	Disables the VOUT decay value requirement for MFR_RETRY_TIME processing. When this bit is set to a 0, the output must decay to less than 12.5% of the programmed value for any action that turns off the rail including a fault, an OFF/ON command, or a toggle of RUN from high to low to high.

This command has one data byte.

PMBus COMMAND DETAILS

MFR_CONFIG_ALL_LTC3883

General purpose configuration command common to multiple LTC products

BIT	MEANING
7	Enable Fault Logging
6	Ignore Resistor Configuration Pins
5	Reserved
4	Reserved
3	Mask PLL Unlock Fault
2	A valid PEC required for PMBus writes to be accepted. If this bit is not set, the part will accept commands with invalid PEC.
1	Enable the use of PMBus clock stretching
0	Reserved

This command has one data byte.

ON/OFF/MARGIN

COMMAND NAME	CMD CODE	DESCRIPTION	TYPE	DATA FORMAT	UNITS	NVM	DEFAULT VALUE
ON_OFF_CONFIG	0x02	RUN pin and PMBus bus on/off command configuration.	R/W Byte	Reg		Y	0x1E
OPERATION	0x01	Operating mode control. On/off, margin high and margin low.	R/W Byte	Reg		Y	0x80
MFR_RESET	0xFD	Commanded reset without requiring a power-down.	Send Byte				NA

ON_OFF_CONFIG

The ON_OFF_CONFIG command configures the combination of RUN pin input and serial bus commands needed to turn the unit on and off. This includes how the unit responds when power is applied.

The only bits allowed to be changed are as follows:

3: Controls how the unit responds to commands received via the serial bus

0: RUN pin action when commanding the unit to turn off. If bit 0 is set to one, the part will stop transferring power to the output stage as fast as possible. This will have the effect of the load discharging the output capacitor. Setting bit 0 to a zero will cause the regulator to use the programmed turn-off delay and fall times. If the part is in continuous mode, the programmed turn-off response may pull the output to zero volts considerably faster than removing power immediately from the load.

Changing the value of bits 4, 2 or 1, will generate a CML fault.

This command has one data byte.

PMBus COMMAND DETAILS

Table 3. ON_OFF_CONFIG Detailed Command Information
ON_OFF_CONFIG Data Contents

BITS(S)	SYMBOL	OPERATION
b[7:5]	Reserved	Don't care. Always returns 0.
b[3]	On_off_config_use_pmbus	Controls how the unit responds to commands received via the serial bus. 0: Unit ignores the Operation command b[7:6]. 1: Unit responds to Operation command b[7:6]. The unit also requires the RUN pin to be asserted for the unit to start.
b[0]	On_off_config_control_fast_off	RUN pin turn off action when commanding the unit to turn off. 0: Use the programmed TOFF_DELAY. 1: Turn off the output and stop transferring energy as quickly as possible. The device does not sink current in order to decrease the output voltage fall time.

Note: A high on the RUN pin is always required to start power conversion. Power conversion will always stop with a low on RUN.

OPERATION

The OPERATION command is used to turn the unit on and off in conjunction with the input from the RUN pin. It is also used to cause the unit to set the output voltage to the upper or lower MARGIN VOLTAGEs. The unit stays in the commanded operating mode until a subsequent OPERATION command or change in the state of the RUN pin instructs the device to change to another mode. If the part is stored in the MARGIN_LOW/HIGH state, the next RESET or POWER_ON cycle will ramp to that state. If the OPERATION command is modified, for example ON is changed to MARGIN_LOW, the output will move at a fixed slope set by the VOUT_TRANSITION_RATE.

Margin High (Ignore Faults) and Margin Low (Ignore Faults) operations are not supported by the LTC3883.

The part defaults to the ON state.

This command has one data byte.

Table 4. OPERATION Command Detail Command
OPERATION Data Contents When On_Off_Config_Use_PMBus Enables Operation_Control

SYMBOL	ACTION	VALUE
BITS		
FUNCTION	Turn off immediately	0x00
	Turn on	0x80
	Margin Low	0x98
	Margin High	0xA8
	Sequence off	0x40

OPERATION Data Contents When On_Off_Config is Configured Such That OPERATION Command is Not Used to Command Channel On or Off

SYMBOL	ACTION	VALUE
BITS		
FUNCTION	Output at Nominal	0x80
	Margin Low	0x98
	Margin High	0xA8

Note: Attempts to write a reserved value will cause a CML fault.

PMBus COMMAND DETAILS

MFR_RESET

This command provides a means by which the user can perform a reset of the LTC3883.

This write-only command has no data bytes.

PWM CONFIGURATION

COMMAND NAME	CMD CODE	DESCRIPTION	TYPE	DATA FORMAT	UNITS	NVM	DEFAULT VALUE
MFR_PWM_MODE_LTC3883	0xD4	Configuration for the PWM engine.	R/W Byte	Reg		Y	0xD2
MFR_PWM_CONFIG_LTC3883	0xF5	Set numerous parameters for the DC/DC controller including phasing.	R/W Byte	Reg		Y	0x10
FREQUENCY_SWITCH	0x33	Switching frequency of the controller.	R/W Word	L11	kHz	Y	350 0xFABC

MFR_PWM_MODE_LTC3883

The MFR_PWM_MODE_LTC3883 command allows the user to program the PWM controller to use Burst Mode operation, discontinuous (pulse-skipping mode), or forced continuous conduction mode.

BIT	MEANING
7	Use High Range of I_{LIMIT}
0b	Low Current Range
1b	High Current Range
6	Enable Servo Mode
[5:4]	READ_IIN Gain Setting
00b	2x Gain, 50mV Max Input
01b	4x Gain, 20mV Max Input
10b	8x, Gain, 8mV Max Input
3	Start DCR Auto Calibration
2	Reserved
Bit[1:0]	Mode
00b	Discontinuous
01b	Burst Mode Operation
10b	Forced Continuous

Whenever the channel is ramping on, the PWM mode will be discontinuous, regardless of the value of this command.

Bit [7] of this command determines if the part is in high range or low range of the IOUT_OC_FAULT_LIMIT command. Changing this bit value changes the PWM loop gain and compensation. Changing this bit value whenever an output is active may have detrimental system results.

Bit [6] The LTC3883 will not servo while the part is OFF, ramping on or ramping off. When set to a one, the output servo is enabled. The output set point DAC will be slowly adjusted to minimize the difference between the READ_VOUT_ADC and the VOUT_COMMAND (or the appropriate margined value).

Bit[5:4] set the READ_IIN gain and range setting of the input current sense amplifier.

PMBus COMMAND DETAILS

Bit[3] Setting this bit to a 1 starts the patent pending inductor DCR auto calibration to determine the DCR of the inductor. This will update the value of IOUT_CAL_GAIN using the READ_IIN, READ_IOUT, and DUTY_CYCLE values. IOUT_CAL_GAIN is adjusted so that READ_IOUT • DUTY_CYCLE = READ_IIN. The auto calibration procedure will only complete successfully if the following conditions are met.

1) The PWM is enabled

2) DUTY_CYCLE is at least 3%

3) READ_IIN is at least 10mA

4) The calibrated IOUT_CAL_GAIN is within ±30% of the uncalibrated IOUT_CAL_GAIN

If any of the above conditions are not met, bit 0 of the STATUS_CML command will be set, and the value of IOUT_CAL_GAIN will not be changed. Bit[3] must then be reset to a 0 by the user. A STORE_USER_ALL command must be issued to store the updated IOUT_CAL_GAIN value into NVM.

Bit[1:0] determine the PWM mode of operation.

This command has one data byte.

MFR_PWM_CONFIG_LTC3883

The MFR_PWM_CONFIG_LTC3883 command sets the switching frequency and phase offset with respect to the falling edge of the SYNC signal. The part must be in the OFF state to process this command. The RUN pin must be low or the part must be commanded off. If the part is in the RUN state and this command is written, the command will be ignored and a BUSY fault will be asserted. Bit 6 of this command affects the loop gain of the PWM output which may require modifications to the external compensation network.

BIT	MEANING
7	Reserved, set to 0.
6	If V_{OUT} RANGE = 1, the maximum output voltage is 2.75V. If RANGE = 0, the maximum output voltage is 5.5V.
5	Reserved
4	Share Clock Enable : If this bit is 1, the SHARE_CLK pin will not be released until V_{IN} > VIN_ON. The SHARE_CLK pin will be pulled low when V_{IN} < VIN_OFF. If this bit is 0, the SHARE_CLK pin will not be pulled low when VIN < VIN_OFF except for the initial application of VIN.
3	Reserved, set to 0
BIT [2:0]	**Phase Offset**
000b	0
001b	90
010b	180
011b	270
100b	60
101b	120
110b	240
111b	300

This command has one data byte.

PMBus COMMAND DETAILS

FREQUENCY_SWITCH

The FREQUENCY_SWITCH command sets the switching frequency, in kHz, of a PMBus device.

Supported Frequencies:

VALUE [15:0]	RESULTING FREQUENCY (TYP)
0x0000	External Oscillator
0xF3E8	250kHz
0xFABC	350kHz
0xFB52	425kHz
0xFBE8	500kHz
0x023F	575kHz
0x028A	650kHz
0x02EE	750kHz
0x03E8	1000kHz

The part must be in the OFF state to process this command. The RUN pin must be low or the part must be commanded off. If the part is in the RUN state and this command is written, the command will be ignored and a BUSY fault will be asserted. When the part is commanded off and the frequency is changed, a PLL_UNLOCK status may be detected as the PLL locks onto the new frequency.

This command has two data bytes and is formatted in Linear_5s_11s format.

VOLTAGE

Input Voltage and Limits

COMMAND NAME	CMD CODE	DESCRIPTION	TYPE	DATA FORMAT	UNITS	NVM	DEFAULT VALUE
VIN_OV_FAULT_ LIMIT	0x55	Input supply overvoltage fault limit.	R/W Word	L11	V	Y	15.5 0xD3E0
VIN_UV_WARN_LIMIT	0x58	Input supply undervoltage warning limit.	R/W Word	L11	V	Y	6.3 0xCB26
VIN_ON	0x35	Input voltage at which the unit should start power conversion.	R/W Word	L11	V	Y	6.5 0xCB40
VIN_OFF	0x36	Input voltage at which the unit should stop power conversion.	R/W Word	L11	V	Y	6.0 0xCB00
MFR_RVIN	0xF7	The resistance value of the V_{IN} pin filter element in milliohms	R/W Word	L11	mΩ	Y	3000 0x12EE

VIN_OV_FAULT_LIMIT

The VIN_OV_FAULT_LIMIT command sets the value of the measured input voltage, in volts, that causes an input overvoltage fault. The fault is detected with the A/D converter resulting in latency up to 90ms.

This command has two data bytes and is formatted in Linear_5s_11s format.

VIN_UV_WARN_LIMIT

The VIN_UV_WARN_LIMIT command sets the value of the input voltage that causes an input undervoltage warning. The warning is detected with the A/D converter resulting in latency up to 90ms.

This command has two data bytes and is formatted in Linear_5s_11s format.

PMBus COMMAND DETAILS

VIN_ON

The VIN_ON command sets the input voltage, in volts, at which the unit should start power conversion.

This command has two data bytes and is formatted in Linear_5s_11s format.

VIN_OFF

The VIN_OFF command sets the input voltage, in volts, at which the unit should stop power conversion.

This command has two data bytes and is formatted in Linear_5s_11s format.

MFR_RVIN

The MFR_RVIN command is used to set the resistance value of the V_{IN} pin filter element in milliohms. (See also READ_VIN). Set MFR_RVIN equal to 0 if no filter element is used.

This command has two data bytes and is formatted in Linear_5s_11s format.

Output Voltage and Limits

COMMAND NAME	CMD CODE	DESCRIPTION	TYPE	DATA FORMAT	UNITS	NVM	DEFAULT VALUE
VOUT_MODE	0x20	Output voltage format and exponent (2^{-12}).	R Byte	Reg			2^{-12} 0x14
VOUT_MAX	0x24	Upper limit on the commanded output voltage including VOUT_MARGIN_HIGH	R/W Word	L16	V	Y	5.5 0x5800
VOUT_OV_FAULT_ LIMIT	0x40	Output overvoltage fault limit.	R/W Word	L16	V	Y	1.1 0x119A
VOUT_OV_WARN_ LIMIT	0x42	Output overvoltage warning limit.	R/W Word	L16	V	Y	1.075 0x1133
VOUT_MARGIN_HIGH	0x25	Margin high output voltage set point. Must be greater than VOUT_COMMAND.	R/W Word	L16	V	Y	1.05 0x10CD
VOUT_COMMAND	0x21	Nominal output voltage set point.	R/W Word	L16	V	Y	1.0 0x1000
VOUT_MARGIN_LOW	0x26	Margin low output voltage set point. Must be less than VOUT_COMMAND.	R/W Word	L16	V	Y	0.95 0x0F33
VOUT_UV_WARN_ LIMIT	0x43	Output undervoltage warning limit.	R/W Word	L16	V	Y	0.925 0x0ECD
VOUT_UV_FAULT_ LIMIT	0x44	Output undervoltage fault limit.	R/W Word	L16	V	Y	0.9 0x0E66
POWER_GOOD_ON	0x5E	Output voltage at or above which a power good should be asserted.	R/W Word	L16	V	Y	0.93 0x0EE1
POWER_GOOD_OFF	0x5F	Output voltage at or below which a power good should be de-asserted.	R/W Word	L16	V	Y	0.92 0x0EB8
MFR_VOUT_MAX	0xA5	Maximum allowed voltage command including VOUT_OV_FAULT_LIMIT.	R Word	L16	V		5.5 0x5800

VOUT_MODE

The data byte for VOUT_MODE command, used for commanding and reading output voltage, consists of a 3-bit mode (only linear format is supported) and a 5-bit parameter representing the exponent used in output voltage Read/Write commands.

This read-only command has one data byte.

PMBus COMMAND DETAILS

VOUT_MAX

The VOUT_MAX command sets an upper limit on the output voltage, including VOUT_MARGIN_HIGH, the unit can command regardless of any other commands or combinations.

This command has two data bytes and is formatted in Linear_16u format.

VOUT_OV_FAULT_LIMIT

The VOUT_OV_FAULT_LIMIT command sets the value of the output voltage measured at the sense pins, in volts, which causes an output overvoltage fault.

If the VOUT_OV_FAULT_LIMIT is modified and the part is in the RUN state, allow 10ms after the command is modified to assure the new value is being honored. The part indicates if it is busy making a calculation. Monitor bits 5 and 6 of MFR_COMMON. Either bit is low if the part is busy. If this wait time is not met, and the VOUT_COMMAND is modified above the old overvoltage limit, an OV condition might temporarily be detected resulting in undesirable behavior and possible damage to the switcher.

If VOUT_OV_FAULT_RESPONSE is set to OV_PULLDOWN or 0x00, the $\overline{\text{GPIO}}$ pin will not assert if VOUT_OV_FAULT is propagated. The LTC3883 will pull the TG low and assert the BG bit as soon as the overvoltage condition is detected.

This command has two data bytes and is formatted in Linear_16u format.

VOUT_OV_WARN_LIMIT

The VOUT_OV_WARN_LIMIT command sets the value of the output voltage measured at the sense pins, in volts, which causes an output voltage high warning. The MFR_VOUT_PEAK value will be used to determine if this limit has been exceeded.

In response to the VOUT_OV_WARN_LIMIT being exceeded, the device:

- Sets the NONE_OF_THE_ABOVE bit in the STATUS_BYTE
- Sets the VOUT bit in the STATUS_WORD
- Sets the VOUT Overvoltage Warning bit in the STATUS_VOUT command
- Notifies the host by asserting $\overline{\text{ALERT}}$ pin

This condition is detected by the ADC so the response time may be up to 90ms.

This command has two data bytes and is formatted in Linear_16u format.

VOUT_MARGIN_HIGH

The VOUT_MARGIN_HIGH command loads the unit with the voltage to which the output is to be changed, in volts, when the OPERATION command is set to “Margin High”. The value must be greater than VOUT_COMMAND.

This command will not be acted on during TON_RISE and TOFF_FALL output sequencing. The VOUT_TRANSITION_RATE will be used if this command is modified while the output is active and in a steady-state condition.

This command has two data bytes and is formatted in Linear_16u format.

PMBus COMMAND DETAILS

VOUT_COMMAND

The VOUT_COMMAND consists of two bytes and is used to set the output voltage, in volts.

This command will not be acted on during TON_RISE and TOFF_FALL output sequencing. The VOUT_TRANSITION_RATE will be used if this command is modified while the output is active and in a steady-state condition.

This command has two data bytes and is formatted in Linear_16u format.

VOUT_MARGIN_LOW

The VOUT_MARGIN_LOW command loads the unit with the voltage to which the output is to be changed, in volts, when the OPERATION command is set to “Margin Low”. The value must be less than VOUT_COMMAND.

This command will not be acted on during TON_RISE and TOFF_FALL output sequencing. The VOUT_TRANSITION_RATE will be used if this command is modified while the output is active and in a steady-state condition.

This command has two data bytes and is formatted in Linear_16u format.

VOUT_UV_WARN_LIMIT

The VOUT_UV_ WARN_LIMIT command reads the value of the output voltage measured at the sense pins, in volts, which causes an output voltage low warning.

In response to the VOUT_UV_WARN_LIMIT being exceeded, the device:

- Sets the NONE_OF_THE_ABOVE bit in the STATUS_BYTE
- Sets the VOUT bit in the STATUS_WORD
- Sets the VOUT Undervoltage Warning bit in the STATUS_VOUT command
- Notifies the host by asserting $\overline{\text{ALERT}}$ pin

This condition is detected by the ADC so the response time may be up to 90ms.

This command has two data bytes and is formatted in Linear_16u format.

VOUT_UV_FAULT_LIMIT

The VOUT_UV_FAULT_LIMIT command reads the value of the output voltage measured at the sense pins, in volts, which causes an output undervoltage fault.

This command has two data bytes and is formatted in Linear_16u format.

POWER_GOOD_ON

The POWER_GOOD_ON command sets the output voltage at which the POWER_GOOD# status bit in the STATUS_WORD command should be de-asserted. POWER_GOOD_ON is detected with an A/D read resulting in latency of up to 90ms. The POWER_GOOD_ON value must be set higher than the POWER_GOOD_OFF value.

This command has two data bytes and is formatted in Linear_16u format.

PMBus COMMAND DETAILS

POWER_GOOD_OFF

The POWER_GOOD_OFF command sets the output voltage at which the POWER_GOOD# status bit in the STATUS_WORD command should be asserted. POWER_GOOD_OFF is detected with an A/D read resulting in latency of up to 90ms. The POWER_GOOD_OFF value must be set lower than the POWER_GOOD_ON value.

At initial power up the state of the PGOOD pin will be high regardless of VOUT. If the proper state of low at power-up is required, place a Schottky diode between RUN and PGOOD. The Anode must be tied to PGOOD and the Cathode to RUN.

The POWER_GOOD# status bit is masked from initiating an $\overline{\text{ALERT}}$. The POWER_GOOD# status bit in the STATUS_WORD command is always reflective of VOUT with respect to the POWER_GOOD threshold regardless of the RUN state. The PGOOD pin state is controlled by the POWER_GOOD# status bit and is qualified by the RUN state.

This command has two data bytes and is formatted in Linear_16u format.

MFR_VOUT_MAX

The MFR_VOUT_MAX command is the maximum output voltage in volts the part can produce including VOUT_OV_FAULT_LIMIT. If the output voltage is set to high range (Bit 6 of MFR_PWM_CONFIG_LTC3883 set to a 0) MFR_VOUT_MAX is 5.5V. If the output voltage is set to low range (Bit 6 of MFR_PWM_CONFIG_LTC3883 set to a 1) the MFR_VOUT_MAX is 2.75V. Entering a VOUT_COMMAND value greater than this will result in a CML fault and the output voltage setting will be clamped to the maximum level. This will also result in Bit 3 VOUT_MAX_Warning in the STATUS_VOUT command being set.

This read only command has 2 data bytes and is formatted in Linear_16u format.

CURRENT

Output Current Calibration

COMMAND NAME	CMD CODE	DESCRIPTION	TYPE	DATA FORMAT	UNITS	NVM	DEFAULT VALUE
IOUT_CAL_GAIN	0x38	The ratio of the voltage at the current sense pins to the sensed current. For devices using a fixed current sense resistor, it is the resistance value in mΩ.	R/W Word	L11	mΩ	Y	1.8 0xBB9A
MFR_IOUT_CAL_GAIN_TC	0xF6	Temperature coefficient of the current sensing element.	R/W Word	CF		Y	3900 0x0F3C
MFR_T_SELF_HEAT	0xB8	Reports the calculated self heat value attributed to the inductor.	R Word	L11	C		NA
MFR_IOUT_CAL_GAIN_TAU_INV	0xB9	Coefficient used to emulate thermal time constant.	R/W Word	L11	s^{-1}	Y	0.0 0x8000
MFR_IOUT_CAL_GAIN_THETA	0xBA	Used to calculate the instance inductor self heating effect.	R/W Word	L11	C/W	Y	0.0 0x8000

IOUT_CAL_GAIN

The IOUT_CAL_GAIN command is used to set the resistance value of the current sense resistor in milliohms. (see also MFR_IOUT_CAL_GAIN_TC).

This command has two data bytes and is formatted in Linear_5s_11s format.

MFR_IOUT_CAL_GAIN_TC

The MFR_IOUT_CAL_GAIN_TC command allows the user to program the temperature coefficient of the IOUT_CAL_GAIN sense resistor or inductor DCR in ppm/°C.

PMBus COMMAND DETAILS

This command has two data bytes and is formatted in 16-bit 2's complement integer ppm. N = –32768 to 32767 • 10^{-6}. Nominal temperature is 27°C. The IOUT_CAL_GAIN is multiplied by:

[1.0 + MFR_IOUT_CAL_GAIN_TC • (READ_TEMPERATURE_1-27)]. DCR sensing will have a typical value of 3900.

The IOUT_CAL_GAIN and MFR_IOUT_CAL_GAIN_TC impact all current parameters including: READ_IOUT, MFR_READ_IIN_CHAN, IOUT_OC_FAULT_LIMIT and IOUT_OC_WARN_LIMIT.

MFR_T_SELF_HEAT, MFR_IOUT_CAL_GAIN_TAU_INV AND MFR_IOUT_CAL_GAIN_THETA

The LTC3883 uses an innovative (patent pending) algorithm to dynamically model the temperature rise from the external temperature sensor to the inductor core. This temperature rise is called MFR_T_SELF_HEAT and is used to calculate the final temperature correction required by IOUT_CAL_GAIN. The temperature rise is a function of the power dissipated in the inductor DCR, the thermal resistance from the inductor core to the remote temperature sensor and the thermal time constant of the inductor to board system. The algorithm simplifies the placement requirements for the external temperature sensor and compensates for the significant steady state and transient temperature error from the inductor core to the primary inductor heat sink.

The best way to understand the self heating effect inside the inductor is to model the system using the circuit analogy of Figure 21. The 1st order differential equation for the above model may be approximated by the following difference equation:

$$P_I - T_I/\theta_{IS} = C_\tau\ \Delta T_I/\Delta t \quad \text{(Eq1) (when } T_S = 0\text{)}$$

from which:

$$\Delta T_I = \Delta t\ (P_I\ \theta_{IS} - T_I)/(\theta_{IS}\ C_\tau) \quad \text{(Eq2) or}$$

$$\Delta T_I = (P_I\ \theta_{IS} - T_I) \bullet \tau_{INV} \quad \text{(Eq3)}$$

where

$$\tau_{INV} = \Delta t/(\theta_{IS}\ C_\tau) \quad \text{(Eq4)}$$

and Δt is the sample period of the external temperature ADC.

The LTC3883 implements the self heating algorithm using Eq3 and Eq4 where:

ΔT_I = ΔMFR_T_SELF_HEAT

P_I = READ_IOUT • ($V_{ISENSEP} - V_{ISENSEM}$)

T_S = READ_TEMPERATURE_1

T_I = MFR_T_SELF_HEAT + T_S

Δt = 1s

τ_{INV} = MFR_IOUT_CAL_GAIN_TAU_INV

θ_{IS} = MFR_IOUT_CAL_GAIN_THETA

Initially self heat is set to zero. After each temperature measurement self heat is updated to be the previous value of self heat incremented or decremented by ΔMFR_T_SELF_HEAT.

PMBus COMMAND DETAILS

The actual value of C_τ is not required. The important quantity is the thermal time constant $\tau_{INV} = (\theta_{IS}\ C_\tau)$. For example, if an inductor has a thermal time constant $\tau_{THERMAL}$ = 5 seconds then:

MFR_IOUT_CAL_GAIN_TAU_INV = $\Delta t / \tau_{THERMAL}$ = 1/5 = 0.2

Refer to the application section for more information on calibrating θ_{IS} and τ_{INV}.

If the external temperature sense network fails to detect a READ_TEMPERATURE_1 reading of –50°C to 150°C, the variable T_S in the self-heating algorithm will be set to a fixed value of –50°C. See READ_TEMPERATURE_1 for more information.

MFR_T_SELF_HEAT is a read-only command that has two data bytes and is formatted in Linear_5_11s format.

MFR_IOUT_CAL_GAIN_TAU_INV has two data bytes and is formatted in Linear_5_11 format.

MFR_IOUT_CAL_GAIN_THETA has two data bytes and is formatted in Linear_5_11 format.

MFR_T_SELF_HEAT Data Content

Bit(s)	Symbol	Operation
b[15:0]	Mfr_t_self_heat	Values are limited to the range 0°C to 50°C.

MFR_IOUT_CAL_GAIN_THETA Data Content

Bit(s)	Symbol	Operation
b[15:0]	Mfr_iout_cal_gain_theta	Values ≤ 0 set MFR_T_SELF_HEAT to zero.

MFR_IOUT_CAL_GAIN_TAU_INV Data Content

Bit(s)	Symbol	Operation
b[15:0]	Mfr_iout_cal_gain_tau_inv	Values ≤ 0 set MFR_T_SELF_HEAT to zero. Values ≥ 1 set MFR_T_SELF_HEAT to MFR_IOUT_CAL_GAIN_THETA • READ_IOUT • ($V_{ISENSEP}$ – $V_{ISENSEM}$).

Output Current

COMMAND NAME	CMD CODE	DESCRIPTION	TYPE	DATA FORMAT	UNITS	NVM	DEFAULT VALUE
IOUT_OC_FAULT_LIMIT	0x46	Output overcurrent fault limit.	R/W Word	L11	A	Y	29.75 0xDBB8
IOUT_OC_WARN_LIMIT	0x4A	Output overcurrent warning limit.	R/W Word	L11	A	Y	20.0 0xDA80

PMBus COMMAND DETAILS

IOUT_OC_FAULT_LIMIT

The IOUT_OC_FAULT_LIMIT command sets the value of the peak output current limit, in amperes. When the controller is in current limit, the overcurrent detector will indicate an overcurrent fault condition. The programmed overcurrent fault limit value is rounded up to the nearest one of the following set of discrete values:

25mV/IOUT_CAL_GAIN	Low Range (1.5x Nominal Loop Gain)
28.6mV/IOUT_CAL_GAIN	MFR_PWM_MODE_LTC3883 [7]=0
32.1mV/IOUT_CAL_GAIN	
35.7mV/IOUT_CAL_GAIN	
39.3mV/IOUT_CAL_GAIN	
42.9mV/IOUT_CAL_GAIN	
46.4mV/IOUT_CAL_GAIN	
50mV/IOUT_CAL_GAIN	
37.5mV/IOUT_CAL_GAIN	High Range (Nominal Loop Gain)
42.9mV/IOUT_CAL_GAIN	MFR_PWM_MODE_LTC3883 [7]=1
48.2mV/IOUT_CAL_GAIN	
53.6mV/IOUT_CAL_GAIN	
58.9mV/IOUT_CAL_GAIN	
64.3mV/IOUT_CAL_GAIN	
69.6mV/IOUT_CAL_GAIN	
75mV/IOUT_CAL_GAIN	

Note: This is the peak of the current waveform. The READ_IOUT command returns the average current. The peak output current limits are adjusted with temperature based on the MFR_IOUT_CAL_GAIN_TC using the equation:

Peak Current Limit = IOUT_CAL_GAIN • (1 + MFR_IOUT_CAL_GAIN_TC • (READ_TEMPERTURE_1-27.0)).

The LTpowerPlay GUI automatically convert the voltages to currents.

The I_{OUT} range is set with bit 7 of the MFR_PWM_MODE_LTC3883 command.

The IOUT_OC_FAULT_LIMIT is ignored during TON_RISE and TOFF_FALL.

This command has two data bytes and is formatted in Linear_5s_11s format.

IOUT_OC_WARN_LIMIT

This command sets the value of the output current that causes an output overcurrent warning in amperes. The READ_IOUT value will be used to determine if this limit has been exceeded.

In response to the IOUT_OC_WARN_LIMIT being exceeded, the device:

- Sets the NONE_OF_THE_ABOVE bit in the STATUS_BYTE
- Sets the IOUT bit in the STATUS_WORD
- Sets the IOUT Overcurrent Warning bit in the STATUS_IOUT command, and
- Notifies the host by asserting $\overline{\text{ALERT}}$ pin

This condition is detected by the ADC so the response time may be up to 90ms.

The IOUT_OC_FAULT_LIMIT is ignored during TON_RISE and TOFF_FALL.

This command has two data bytes and is formatted in Linear_5s_11s format.

PMBus COMMAND DETAILS

Input Current Calibration

COMMAND NAME	CMD CODE	DESCRIPTION	TYPE	DATA FORMAT	UNITS	NVM	DEFAULT VALUE
MFR_IIN_CAL_GAIN	0xE8	The resistance value of the input current sense element in mΩ.	R/W Word	L11	mΩ	Y	5.000 0xCA80

MFR_IIN_CAL_GAIN

The IOUT_CAL_GAIN command is used to set the resistance value of the input current sense resistor in milliohms. (see also READ_IIN).

This command has two data bytes and is formatted in Linear_5s_11s format.

Input Current

COMMAND NAME	CMD CODE	DESCRIPTION	TYPE	DATA FORMAT	UNITS	NVM	DEFAULT VALUE
IIN_OC_WARN_LIMIT	0x5D	Input overcurrent warning limit.	R/W Word	L11	A	Y	10.0 0xD280

IIN_OC_WARN_LIMIT

The IIN_OC_WARN_LIMIT command sets the value of the input current, in amperes, that causes a warning indicating the input current is high. The READ_IIN value will be used to determine if this limit has been exceeded.

In response to the IIN_OC_WARN_LIMIT being exceeded, the device:

- Sets the OTHER bit in the STATUS_BYTE
- Sets the INPUT bit in the upper byte of the STATUS_WORD
- Sets the IIN Overcurrent Warning bit in the STATUS_INPUT command, and
- Notifies the host by asserting $\overline{\text{ALERT}}$ pin

This condition is detected by the ADC so the response time may be up to 90ms.

This command has two data bytes and is formatted in Linear_5s_11s format.

TEMPERATURE

External Temperature Calibration

COMMAND NAME	CMD CODE	DESCRIPTION	TYPE	DATA FORMAT	UNITS	NVM	DEFAULT VALUE
MFR_TEMP_1_GAIN	0xF8	Sets the slope of the external temperature sensor.	R/W Word	CF		Y	1.0 0x4000
MFR_TEMP_1_OFFSET	0xF9	Sets the offset of the external temperature sensor with respect to –273.1°C.	R/W Word	L11	C	Y	0.0 0x8000

MFR_TEMP_1_GAIN

The MFR_TEMP_1_GAIN command will modify the slope of the external temperature sensor to account for non-idealities in the element and errors associated with the remote sensing of the temperature in the inductor.

This command has two data bytes and is formatted in 16-bit 2's complement integer. N = 8192 to 32767. The effective adjustment is $N \cdot 2^{-14}$. The nominal value is 1.

PMBus COMMAND DETAILS

MFR_TEMP_1_OFFSET

The MFR_TEMP_1_OFFSET command will modify the offset of the external temperature sensor to account for non-idealities in the element and errors associated with the remote sensing of the temperature in the inductor.

This command has two data bytes and is formatted in Linear_5s_11s format. The part starts the calculation with a value of –273.15 so the default adjustment value is zero.

External Temperature Limits

COMMAND NAME	CMD CODE	DESCRIPTION	TYPE	DATA FORMAT	UNITS	NVM	DEFAULT VALUE
OT_FAULT_LIMIT	0x4F	External overtemperature fault limit.	R/W Word	L11	C	Y	100.0 0xEB20
OT_WARN_LIMIT	0x51	External overtemperature warning limit.	R/W Word	L11	C	Y	85.0 0xEAA8
UT_FAULT_LIMIT	0x53	External undertemperature fault limit.	R/W Word	L11	C	Y	–40.0 0xE580

OT_FAULT_LIMIT

The OT_FAULT_LIMIT command sets the value of the external sense temperature, in degrees Celsius, which causes an overtemperature fault. The READ_TEMPERATURE_1 value will be used to determine if this limit has been exceeded.

This condition is detected by the ADC so the response time may be up to 90ms.

This command has two data bytes and is formatted in Linear_5s_11s format.

OT_WARN_LIMIT

The OT_WARN_LIMIT command sets the value of the external sense temperature, in degrees Celsius, which causes an overtemperature warning. The READ_TEMPERATURE_1 value will be used to determine if this limit has been exceeded.

In response to the OT_WARN_LIMIT being exceeded, the device:

- Sets the TEMPERATURE bit in the STATUS_BYTE
- Sets the Overtemperature Warning bit in the STATUS_TEMPERATURE command, and
- Notifies the host by asserting $\overline{\text{ALERT}}$ pin.

This condition is detected by the ADC so the response time may be up to 90ms.

This command has two data bytes and is formatted in Linear_5s_11s format.

UT_FAULT_LIMIT

The UT_FAULT_LIMIT command sets the value of the external sense temperature, in degrees Celsius, which causes an undertemperature fault. The READ_TEMPERATURE_1 value will be used to determine if this limit has been exceeded.

Note: If the temp sensors are not installed, the UT_FAULT_LIMIT can be set to –275°C and UT_FAULT_LIMIT response set to ignore to avoid $\overline{\text{ALERT}}$ being asserted.

This condition is detected by the ADC so the response time may be up to 90ms.

This command has two data bytes and is formatted in Linear_5s_11s format.

PMBus COMMAND DETAILS

TIMING

Timing—On Sequence/Ramp

COMMAND NAME	CMD CODE	DESCRIPTION	TYPE	DATA FORMAT	UNITS	NVM	DEFAULT VALUE
TON_DELAY	0x60	Time from RUN and/or Operation on to output rail turn-on.	R/W Word	L11	ms	Y	0.0 0x8000
TON_RISE	0x61	Time from when the output starts to rise until the output voltage reaches the VOUT commanded value.	R/W Word	L11	ms	Y	8.0 0xD200
TON_MAX_FAULT_LIMIT	0x62	Maximum time from V_{OUT_EN} on for VOUT to cross the VOUT_UV_FAULT_LIMIT.	R/W Word	L11	ms	Y	10.0 0xD280
VOUT_TRANSITION_RATE	0x27	Rate the output changes when VOUT commanded to a new value.	R/W Word	L11	V/ms	Y	0.25 0xAA00

TON_DELAY

The TON_DELAY command sets the time, in milliseconds, from when a start condition is received until the output voltage starts to rise. Values from 0ms to 83 seconds are valid. The TON_DELAY will have a typical delay of 270µs with an uncertainty of ±50µs.

This command has two data bytes and is formatted in Linear_5s_11s format.

TON_RISE

The TON_RISE command sets the time, in milliseconds, from the time the output starts to rise to the time the output enters the regulation band. Values from 0 to 1.3 seconds are valid. The part will be in discontinuous mode during TON_RISE events. If TON_RISE is less than 0.25ms, the LTC3883 digital slope will be bypassed. The output voltage transition will be controlled by the analog performance of the PWM switcher. The number of steps in TON_RISE is equal to TON_RISE (in ms)/0.1ms with an uncertainty of ±0.1ms.

This command has two data bytes and is formatted in Linear_5s_11s format.

TON_MAX_FAULT_LIMIT

The TON_MAX_FAULT_LIMIT command sets the value, in milliseconds, on how long the unit can attempt to power up the output without reaching the output undervoltage fault limit.

A data value of 0ms means that there is no limit and that the unit can attempt to bring up the output voltage indefinitely. The maximum limit is 83 seconds.

This command has two data bytes and is formatted in Linear_5s_11s format.

VOUT_TRANSITION_RATE

When a PMBus device receives either a VOUT_COMMAND or OPERATION (Margin High, Margin Low) that causes the output voltage to change this command set the rate in V/ms at which the output voltage changes. This commanded rate of change does not apply when the unit is commanded on or off. The maximum allowed slope is 4V/ms.

Values of greater than 0.1V/ms and less than or equal to 1V/ms are recommended. If a transition rate out of this range is desired, contact the factory for more information.

This command has two data bytes and is formatted in Linear_5s_11s format.

PMBus COMMAND DETAILS

Timing—Off Sequence/Ramp

COMMAND NAME	CMD CODE	DESCRIPTION	TYPE	DATA FORMAT	UNITS	NVM	DEFAULT VALUE
TOFF_DELAY	0x64	Time from RUN and/or Operation off to the start of TOFF_FALL ramp.	R/W Word	L11	ms	Y	0.0 0x8000
TOFF_FALL	0x65	Time from when the output starts to fall until the output reaches zero volts.	R/W Word	L11	ms	Y	8.0 0xD200
TOFF_MAX_WARN_LIMIT	0x66	Maximum allowed time, after TOFF_FALL completed, for the unit to decay below 12.5%.	R/W Word	L11	ms	Y	150 0xF258

TOFF_DELAY

The TOFF_DELAY command sets the time, in milliseconds, from when a stop condition is received until the output voltage starts to fall. Values from 0 to 83 seconds are valid. The TON_DELAY will have a typical delay of 270µs with an uncertainty of ±50µs.

This command is excluded from fault events.

This command has two data bytes and is formatted in Linear_5s_11s format.

TOFF_FALL

The TOFF_FALL command sets the time, in milliseconds, from the end of the turn-off delay time until the output voltage is commanded to zero. It is the ramp time of the V_{OUT} DAC. When the V_{OUT} DAC is zero, the part will three-state.

The part will maintain the mode of operation programmed. For defined TOFF_FALL times, the user should set the part to continuous conduction mode. Loading the max value indicates the part will ramp down at the slowest possible rate. The minimum supported fall time is 0.25ms. A value less than 0.25ms will result in a 0.25ms ramp. The maximum fall time is 1.3 seconds. The number of steps in TOFF_FALL is equal to TOFF_FALL (in ms)/0.1ms with an uncertainty of ±0.1ms.

In discontinuous conduction mode, the controller will not draw current from the load and the fall time will be set by the output capacitance and load current.

This command has two data bytes and is formatted in Linear_5s_11s format.

TOFF_MAX_WARN_LIMIT

The TOFF_MAX_WARN_LIMIT command sets the value, in milliseconds, on how long the unit can attempt to turn off the output until a warning is asserted. The output is considered off when the V_{OUT} voltage is less than 12.5% of the programmed VOUT_COMMAND value. The calculation begins after TOFF_FALL is complete. TOFF_MAX_WARN_LIMIT is not enabled if VOUT_DECAY is disabled.

A data value of 0ms means that there is no limit and that the unit can attempt to turn off the output voltage indefinitely. Other than 0, values from 120ms to 524 seconds are valid.

This command has two data bytes and is formatted in Linear_5s_11s format.

Precondition for Restart

COMMAND NAME	CMD CODE	DESCRIPTION	TYPE	DATA FORMAT	UNITS	NVM	DEFAULT VALUE
MFR_RESTART_ DELAY	0xDC	Minimum time the RUN pin is held low by the LTC3883.	R/W Word	L11	ms	Y	500 0xFBE8

PMBus COMMAND DETAILS

MFR_RESTART_DELAY

This command specifies the minimum RUN off time in milliseconds. This device will pull the RUN pin low for this length of time once a falling edge of RUN has been detected. The minimum recommended value is 136ms.

Note: The restart delay is different than the retry delay. The restart delay pulls RUN low for the specified time, after which a standard start-up sequence is initiated. The minimum restart delay should be equal to TOFF_DELAY + TOFF_FALL + 136ms. Valid values are from 136ms to 65.52 seconds in 16ms increments. To assure a minimum off time, set the MFR_RESTART_DELAY 16mS longer than the desired time. The output rail can be off longer than the MFR_RESTART_DELAY after the RUN pin is pulled high if the output decay bit 0 is enabled in MFR_CHAN_CONFIG_LTC3883 and the output takes a long time to decay below 12.5% of the programmed value.

This command has two data bytes and is formatted in Linear_5s_11s format.

FAULT RESPONSE

Fault Responses All Faults

COMMAND NAME	CMD CODE	DESCRIPTION	TYPE	DATA FORMAT	UNITS	NVM	DEFAULT VALUE
MFR_RETRY_ DELAY	0xDB	Retry interval during FAULT retry mode.	R/W Word	L11	ms	Y	350 0xFABC

MFR_RETRY_DELAY

This command sets the time in milliseconds between retries if the fault response is to retry the controller at specified intervals. This command value is used for all fault responses that require retry. The retry time starts once the fault has been detected by the offending channel. Valid values are from 120ms to 83.88 seconds in 10µs increments.

Note: The retry delay time is determined by the longer of the MFR_RETRY_DELAY command or the time required for the regulated output to decay below 12.5% of the programmed value. If the natural decay time of the output is too long, it is possible to remove the voltage requirement of the MFR_RETRY_DELAY command by asserting bit 0 of MFR_CHAN_CONFIG_LTC3883.

This command has two data bytes and is formatted in Linear_5s_11s format.

Fault Responses Input Voltage

COMMAND NAME	CMD CODE	DESCRIPTION	TYPE	DATA FORMAT	UNITS	NVM	DEFAULT VALUE
VIN_OV_FAULT_RESPONSE	0x56	Action to be taken by the device when an input supply overvoltage fault is detected.	R/W Byte	Reg		Y	0x80

VIN_OV_FAULT_RESPONSE

The VIN_OV_FAULT_RESPONSE command instructs the device on what action to take in response to an input overvoltage fault. The data byte is in the format given in Table 9.

The device also:

- Sets the NONE_OF_THE_ABOVE bit in the STATUS_BYTE
- Set the INPUT bit in the upper byte of the STATUS_WORD

PMBus COMMAND DETAILS

• Sets the VIN Overvoltage Fault bit in the STATUS_INPUT command, and

• Notifies the host by asserting $\overline{\text{ALERT}}$ pin

This command has one data byte.

Fault Responses Output Voltage

COMMAND NAME	CMD CODE	DESCRIPTION	TYPE	DATA FORMAT	UNITS	NVM	DEFAULT VALUE
VOUT_OV_FAULT_RESPONSE	0x41	Action to be taken by the device when an output overvoltage fault is detected.	R/W Byte	Reg		Y	0xB8
VOUT_UV_FAULT_RESPONSE	0x45	Action to be taken by the device when an output undervoltage fault is detected.	R/W Byte	Reg		Y	0xB8
TON_MAX_FAULT_ RESPONSE	0x63	Action to be taken by the device when a TON_MAX_FAULT event is detected.	R/W Byte	Reg		Y	0xB8

VOUT_OV_FAULT_RESPONSE

The VOUT_OV_FAULT_RESPONSE command instructs the device on what action to take in response to an output overvoltage fault. The data byte is in the format given in Table 5.

The device also:

• Sets the VOUT_OV bit in the STATUS_BYTE

• Sets the VOUT bit in the STATUS_WORD

• Sets the VOUT Overvoltage Fault bit in the STATUS_VOUT command

• Notifies the host by asserting $\overline{\text{ALERT}}$ pin

The only values recognized for this command are:

0x00–Part performs OV pull down only, or OV_PULLDOWN.

0x80–The device shuts down (disables the output) and the unit does not attempt to retry. (PMBus, Part II, Section 10.7).

0xB8–The device shuts down (disables the output) and device attempts to retry continuously, without limitation, until it is commanded OFF (by the RUN pin or OPERATION command or both), bias power is removed, or another fault condition causes the unit to shut down.

0x4n The device shuts down and the unit does not attempt to retry. The output remains disabled until the part is commanded OFF then ON or the RUN pin is asserted low then high or RESET through the command or removal of VIN. The OV fault must remain active for a period of n • 10µs, where n is a value from 0 to 7.

0x78+n The device shuts down and the unit attempts to retry continuously until either the fault condition is cleared or the part is commanded OFF then ON or the RUN pin is asserted low then high or RESET through the command or removal of VIN. The OV fault must remain active for a period of n • 10µs, where n is a value from 0 to 7.

Any other value will result in a CML fault and the write will be ignored.

This command has one data byte.

PMBus COMMAND DETAILS

Table 5. VOUT_OV_FAULT_RESPONSE Data Byte Contents

BITS	DESCRIPTION	VALUE	MEANING
7:6	Response For all values of bits [7:6], the LTC3883: • Sets the corresponding fault bit in the status commands and • Notifies the host by asserting $\overline{\text{ALERT}}$ pin The fault bit, once set, is cleared only when one or more of the following events occurs: • The device receives a CLEAR_FAULTS command. • The output is commanded through the RUN pin, the OPERATION command, or the combined action of the RUN pin and OPERATION command, to turn off and then to turn back on, or • Bias power is removed and reapplied to the LTC3883.	00	Part performs OV pull down only or OV_PULLDOWN (i.e., turns off the top MOSFET and turns on lower MOSFET while V_{OUT} is > VOUT_OV_FAULT)
		01	The PMBus device continues operation for the delay time specified by bits [2:0] and the delay time unit specified for that particular fault. If the fault condition is still present at the end of the delay time, the unit responds as programmed in the Retry Setting (bits [5:3]).
		10	The device shuts down immediately (disables the output) and responds according to the retry setting in bits [5:3].
		11	Not supported. Writing this value will generate a CML fault.
5:3	Retry Setting	000	The unit does not attempt to restart. The output remains disabled until the fault is cleared until the device is commanded OFF bias power is removed.
		111	The PMBus device attempts to restart continuously, without limitation, until it is commanded OFF (by the RUN pin or OPERATION command or both), bias power is removed, or another fault condition causes the unit to shut down without retry. Note: The retry interval is set by the MFR_RETRY_DELAY command.
2:0	Delay Time	000-111	The delay time in 10µs increments. This delay time determines how long the controller continues operating after a fault is detected. Only valid for deglitched off state.

VOUT_UV_FAULT_RESPONSE

The VOUT_UV_FAULT_RESPONSE command instructs the device on what action to take in response to an output undervoltage fault. The data byte is in the format given in Table 6.

The device also:

- Sets the NONE_OF_THE_ABOVE bit in the STATUS_BYTE
- Sets the VOUT bit in the STATUS_WORD
- Sets the VOUT undervoltage fault bit in the STATUS_VOUT command
- Notifies the host by asserting $\overline{\text{ALERT}}$ pin

The UV fault and warn are masked until the following criteria are achieved:

1) The TON_MAX_FAULT_LIMIT has been reached
2) The TON_DELAY sequence has completed
3) The TON_RISE sequence has completed
4) The VOUT_UV_FAULT_LIMIT threshold has been reached
5) The IOUT_OC_FAULT_LIMIT is not present

The UV fault and warn are masked whenever the channel is not active.

The UV fault and warn are masked during TON_RISE and TOFF_FALL sequencing.

This command has one data byte.

PMBus COMMAND DETAILS

Table 6. VOUT_UV_FAULT_RESPONSE Data Byte Contents

BITS	DESCRIPTION	VALUE	MEANING
7:6	Response For all values of bits [7:6], the LTC3883: • Sets the corresponding fault bit in the status commands and • Notifies the host by asserting $\overline{\text{ALERT}}$ pin The fault bit, once set, is cleared only when one or more of the following events occurs: • The device receives a CLEAR_FAULTS command • The output is commanded through the RUN pin, the OPERATION command, or the combined action of the RUN pin and OPERATION command, to turn off and then to turn back on, or • Bias power is removed and reapplied to the LTC3883	00	The PMBus device continues operation without interruption. (Ignores the fault functionally)
		01	The PMBus device continues operation for the delay time specified by bits [2:0] and the delay time unit specified for that particular fault. If the fault condition is still present at the end of the delay time, the unit responds as programmed in the Retry Setting (bits [5:3]).
		10	The device shuts down (disables the output) and responds according to the retry setting in bits [5:3].
		11	Not supported. Writing this value will generate a CML fault.
5:3	Retry Setting	000	The unit does not attempt to restart. The output remains disabled until the fault is cleared until the device is commanded OFF bias power is removed.
		111	The PMBus device attempts to restart continuously, without limitation, until it is commanded OFF (by the RUN pin or OPERATION command or both), bias power is removed, or another fault condition causes the unit to shut down without retry. Note: The retry interval is set by the MFR_RETRY_DELAY command.
2:0	Delay Time	000-111	The delay time in 10µs increments. This delay time determines how long the controller continues operating after a fault is detected. Only valid for deglitched off state.

TON_MAX_FAULT_RESPONSE

The TON_MAX_FAULT_RESPONSE command instructs the device on what action to take in response to a TON_MAX fault. The data byte is in the format given in Table 9.

The device also:

• Sets the NONE_OF_THE_ABOVE bit in the STATUS_BYTE

• Sets the VOUT bit in the STATUS_WORD

• Sets the TON_MAX_FAULT bit in the STATUS_VOUT command, and

• Notifies the host by asserting $\overline{\text{ALERT}}$ pin

A value of 0 disables the TON_MAX_FAULT_RESPONSE. It is not recommended to use 0.

This command has one data byte.

Fault Responses Output Current

COMMAND NAME	CMD CODE	DESCRIPTION	TYPE	DATA FORMAT	UNITS	NVM	DEFAULT VALUE
IOUT_OC_FAULT_RESPONSE	0x47	Action to be taken by the device when an output overcurrent fault is detected.	R/W Byte	Reg		Y	0x00

PMBus COMMAND DETAILS

IOUT_OC_FAULT_RESPONSE

The IOUT_OC_FAULT_RESPONSE command instructs the device on what action to take in response to an output overcurrent fault. The data byte is in the format given in Table 7.

The device also:

- Sets the NONE_OF_THE_ABOVE bit in the STATUS_BYTE
- Sets the IOUT_OC bit in the STATUS_BYTE
- Sets the IOUT bit in the STATUS_WORD
- Sets the IOUT Overcurrent Fault bit in the STATUS_IOUT command, and
- Notifies the host by asserting $\overline{\text{ALERT}}$ pin

This command has one data byte.

Table 7. IOUT_OC_FAULT_RESPONSE Data Byte Contents

BITS	DESCRIPTION	VALUE	MEANING
7:6	Response For all values of bits [7:6], the LTC3883: • Sets the corresponding fault bit in the status commands and • Notifies the host by asserting $\overline{\text{ALERT}}$ pin The fault bit, once set, is cleared only when one or more of the following events occurs: • The device receives a CLEAR_FAULTS command • The output is commanded through the RUN pin, the OPERATION command, or the combined action of the RUN pin and OPERATION command, to turn off and then to turn back on, or • Bias power is removed and reapplied to the LTC3883.	00	The LTC3883 continues to operate indefinitely while maintaining the output current at the value set by IOUT_OC_FAULT_LIMIT without regard to the output voltage (known as constant-current or brick-wall limiting).
		01	Not supported.
		10	The LTC3883 continues to operate, maintaining the output current at the value set by IOUT_OC_FAULT_LIMIT without regard to the output voltage, for the delay time set by bits [2:0]. If the device is still operating in current limit at the end of the delay time, the device responds as programmed by the Retry Setting in bits [5:3].
		11	The LTC3883 shuts down immediately and responds as programmed by the Retry Setting in bits [5:3].
5:3	Retry Setting	000	The unit does not attempt to restart. The output remains disabled until the fault is cleared by cycling the RUN pin or removing bias power.
		111	The device attempts to restart continuously, without limitation, until it is commanded OFF (by the RUN pin or OPERATION command or both), bias power is removed, or another fault condition causes the unit to shut down. Note: The retry interval is set by the MFR_RETRY_DELAY command.
2:0	Delay Time	000-111	The number of delay time units in 16ms increments. This delay time is used to determine the amount of time a unit is to continue operating after a fault is detected before shutting down. Only valid for deglitched off response.

Fault Responses IC Temperature

COMMAND NAME	CMD CODE	DESCRIPTION	TYPE	DATA FORMAT	UNITS	NVM	DEFAULT VALUE
MFR_OT_FAULT_RESPONSE	0xD6	Action to be taken by the device when an internal overtemperature fault is detected	R Byte	Reg			0xC0

PMBus COMMAND DETAILS

MFR_OT_FAULT_RESPONSE

The MFR_OT_FAULT_RESPONSE command byte instructs the device on what action to take in response to an internal overtemperature fault. The data byte is in the format given in Table 8.

The LTC3883 also:

- Sets the NONE_OF_THE_ABOVE bit in the STATUS_BYTE
- Sets the MFR bit in the STATUS_WORD, and
- Sets the Overtemperature Fault bit in the STATUS_MFR_SPECIFIC command
- Notifies the host by asserting $\overline{\text{ALERT}}$ pin

This command has one data byte.

Table 8. Data Byte Contents MFR_OT_FAULT_RESPONSE

BITS	DESCRIPTION	VALUE	MEANING
7:6	Response For all values of bits [7:6], the LTC3883: • Sets the corresponding fault bit in the status commands and • Notifies the host by asserting $\overline{\text{ALERT}}$ pin The fault bit, once set, is cleared only when one or more of the following events occurs: • The device receives a CLEAR_FAULTS command • The output is commanded through the RUN pin, the OPERATION command, or the combined action of the RUN pin and OPERATION command, to turn off and then to turn back on, or • Bias power is removed and reapplied to the LTC3883	00	Not supported. Writing this value will generate a CML fault.
		01	Not supported. Writing this value will generate a CML fault
		10	The device shuts down immediately (disables the output) and responds according to the retry setting in bits [5:3].
		11	The device's output is disabled while the fault is present. Operation resumes and the output is enabled when the fault condition no longer exists.
5:3	Retry Setting	000	The unit does not attempt to restart. The output remains disabled until the fault is cleared.
		001-111	Not supported. Writing this value will generate CML fault.
2:0	Delay Time	XXX	Not supported. Value ignored

Fault Responses External Temperature

COMMAND NAME	CMD CODE	DESCRIPTION	TYPE	DATA FORMAT	UNITS	NVM	DEFAULT VALUE
OT_FAULT_ RESPONSE	0x50	Action to be taken by the device when an external overtemperature fault is detected,	R/W Byte	Reg		Y	0xB8
UT_FAULT_ RESPONSE	0x54	Action to be taken by the device when an external undertemperature fault is detected.	R/W Byte	Reg		Y	0xB8

OT_FAULT_RESPONSE

The OT_FAULT_RESPONSE command instructs the device on what action to take in response to an external overtemperature fault on the external temp sensors. The data byte is in the format given in Table 9.

The device also:

- Sets the TEMPERATURE bit in the STATUS_BYTE
- Sets the Overtemperature Fault bit in the STATUS_TEMPERATURE command, and
- Notifies the host by asserting $\overline{\text{ALERT}}$ pin

PMBus COMMAND DETAILS

This condition is detected by the ADC so the response time may be up to 90ms.

This command has one data byte.

UT_FAULT_RESPONSE

The UT_FAULT_RESPONSE command instructs the device on what action to take in response to an external undertemperature fault on the external temp sensors. The data byte is in the format given in Table 9.

The device also:

- Sets the TEMPERATURE bit in the STATUS_BYTE
- Sets the Undertemperature Fault bit in the STATUS_TEMPERATURE command, and
- Notifies the host by asserting $\overline{\text{ALERT}}$ pin

This condition is detected by the ADC so the response time may be up to 90ms.

This command has one data byte.

Table 9. Data Byte Contents: TON_MAX_FAULT_RESPONSE, VIN_OV_FAULT_RESPONSE, OT_FAULT_RESPONSE, UT_FAULT_RESPONSE

BITS	DESCRIPTION	VALUE	MEANING
7:6	Response For all values of bits [7:6], the LTC3883: • Sets the corresponding fault bit in the status commands, and • Notifies the host by asserting $\overline{\text{ALERT}}$ pin The fault bit, once set, is cleared only when one or more of the following events occurs: • The device receives a CLEAR_FAULTS command • The output is commanded through the RUN pin, the OPERATION command, or the combined action of the RUN pin and OPERATION command, to turn off and then to turn back on, or • Bias power is removed and reapplied to the LTC3883	00	The PMBus device continues operation without interruption.
		01	Not supported. Writing this value will generate a CML fault.
		10	The device shuts down immediately (disables the output) and responds according to the retry setting in bits [5:3].
		11	Not supported. Writing this value will generate a CML fault.
5:3	Retry Setting	000	The unit does not attempt to restart. The output remains disabled until the fault is cleared until the device is commanded OFF bias power is removed.
		111	The PMBus device attempts to restart continuously, without limitation, until it is commanded OFF (by the RUN pin or OPERATION command or both), bias power is removed, or another fault condition causes the unit to shut down without retry. Note: The retry interval is set by the MFR_RETRY_DELAY command.
2:0	Delay Time	XXX	Not supported. Values ignored

FAULT SHARING

Fault Sharing Propagation

COMMAND NAME	CMD CODE	DESCRIPTION	TYPE	DATA FORMAT	UNITS	NVM	DEFAULT VALUE
MFR_GPIO_PROPAGATE_LTC3883	0xD2	Configuration that determines which faults are propagated to the GPIO pins.	R/W Word	Reg		Y	0x2993

PMBus COMMAND DETAILS

MFR_GPIO_PROPAGATE_LTC3883

The MFR_GPIO_PROPAGATE_LTC3883 command enables the events that can cause the $\overline{\text{GPIO}}$ pin to assert low. The command is formatted as shown in Table 10. Faults can only be propagated to the $\overline{\text{GPIO}}$ pin if they are programmed to respond to faults.

This command has two data bytes.

Table 10: $\overline{\text{GPIO}}$ Propagate Configuration

The $\overline{\text{GPIO}}$ pin is designed to provide electrical notification of selected events to the user.

BIT(S)	SYMBOL	OPERATION
B[15]	VOUT disabled while not decayed.	This status bit is used in a PolyPhase configuration when bit 0 of the MFR_CHAN_CONFIG_LTC3883 is a zero. If the PWM is turned off, by toggling the RUN pin or commanding the part OFF, and then the RUN is reasserted or the part is commanded back on before the output has decayed, VOUT will not restart until the 12.5% decay is honored. The $\overline{\text{GPIO}}$ pin is asserted during this condition if bit 15 is asserted.
B[14]	Mfr_gpio_propagate_short_CMD_cycle	0: No action 1: This status bit asserts low if commanded off then on before the output has sequenced off. Re-asserts high after sequence off.
b[13]	Mfr_gpio_propagate_ton_max_fault	0: No action if a TON_MAX_FAULT fault is asserted 1: $\overline{\text{GPIO}}$ will be asserted low if a TON_MAX_FAULT fault is asserted
b[12]	Mfr_gpio_propagate_vout_uvuf	Deglitched VOUT_UV_FAULT_LIMIT comparator output with a 250µs minimum pulse width filter. If this status bit is asserted, $\overline{\text{GPIO}}$ is low anytime VOUT is below the UV threshold. If the GPIO_FAULT_RESPONSE is not set to ignore, the part will latch off and never be able to start.
b[11]	Mfr_gpio_propagate_int_ot	0: No action if the MFR_OT_FAULT_LIMIT fault is asserted 1: Output will be asserted low if the MFR_OT_FAULT_LIMIT fault is asserted
b[10]	Reserved	Must be set to 0
b[9]	Mfr_pwrgd_en (Note 1)	0: No action if POWER_GOOD is not true 1: $\overline{\text{GPIO}}$ will be asserted low if POWER_GOOD is not true If this status bit is asserted, the GPIO_FAULT_RESPONSE must be ignore. If the GPIO_FAULT_RESPONSE is not set to ignore, the part will latch off and never be able to start.
b[8]	Mfr_gpio_propagate_ut	0: No action if the UT_FAULT_LIMIT fault is asserted 1: $\overline{\text{GPIO}}$ will be asserted low if the UT_FAULT_LIMIT fault is asserted
b[7]	Mfr_gpio_propagate_ot	0: No action if the OT_FAULT_LIMIT fault is asserted 1: $\overline{\text{GPIO}}$ will be asserted low if the OT_FAULT_LIMIT fault is asserted
b[6]	Reserved	
b[5]	Reserved	
b[4]	Mfr_gpio_propagate_input_ov	0: No action if the VIN_OV_FAULT_LIMIT fault is asserted 1: $\overline{\text{GPIO}}$ will be asserted low if the VIN_OV_FAULT_LIMIT fault is asserted
b[3]	Reserved	
b[2]	Mfr_gpio_propagate_iout_oc	0: No action if the IOUT_OC_FAULT_LIMIT fault is asserted 1: $\overline{\text{GPIO}}$ will be asserted low if the IOUT_OC_FAULT_LIMIT fault is asserted
b[1]	Mfr_gpio_propagate_vout_uv	0: No action if the VOUT_UV_FAULT_LIMIT fault is asserted 1: $\overline{\text{GPIO}}$ will be asserted low if the VOUT_UV_FAULT_LIMIT fault is asserted If this fault bit is asserted, $\overline{\text{GPIO}}$ is low anytime VOUT is below the UV threshold due to a fault. A UV fault can only occur when the part is in a steady-state ON condition.
b[0]	Mfr_gpio_propagate_vout_ov	0: No action if the VOUT_OV_FAULT_LIMIT fault is asserted 1: $\overline{\text{GPIO}}$ will be asserted low if the VOUT_OV_FAULT_LIMIT fault is asserted

Note 1: The PWRGD status is designed as an indicator and not to be used for power supply sequencing.

PMBus COMMAND DETAILS

Fault Sharing Response

COMMAND NAME	CMD CODE	DESCRIPTION	TYPE	DATA FORMAT	UNITS	NVM	DEFAULT VALUE
MFR_GPIO_RESPONSE	0xD5	Action to be taken by the device when the GPIO pin is asserted low.	R/W Byte	Reg		Y	0xC0

MFR_GPIO_RESPONSE

This command determines the controller's response to the $\overline{\text{GPIO}}$ pin being pulled low by an external source.

VALUE	MEANING
0xC0	GPIO_INHIBIT The LTC3883 will three-state the output in response to the GPIO pin pulled low.
0x00	GPIO_IGNORE The LTC3883 continues operation without interruption.

The device also:

- Sets the NONE_OF_THE_ABOVE bit in the STATUS_BYTE
- Sets the MFR bit in the STATUS_WORD
- Sets the GPIOB bit in the STATUS_MFR_SPECIFIC command, and notifies the host by asserting $\overline{\text{ALERT}}$ pin. The $\overline{\text{ALERT}}$ pin pulled low can be disabled by setting bit[1] of MFR_CHAN_CFG_LTC3883.

This command has one data byte.

SCRATCHPAD

COMMAND NAME	CMD CODE	DESCRIPTION	TYPE	DATA FORMAT	UNITS	NVM	DEFAULT VALUE
USER_DATA_00	0xB0	OEM reserved. Typically used for part serialization.	R/W Word	Reg		Y	NA
USER_DATA_01	0xB1	Manufacturer reserved for LTpowerPlay.	R/W Word	Reg		Y	NA
USER_DATA_02	0xB2	OEM reserved. Typically used for part serialization.	R/W Word	Reg		Y	NA
USER_DATA_03	0xB3	A NVM word available for the user.	R/W Word	Reg		Y	0x0000
USER_DATA_04	0xB4	A NVM word available for the user.	R/W Word	Reg		Y	0x0000

USER_DATA_00 THROUGH *USER_DATA_04*

These commands are non-volatile memory locations for customer storage. The customer has the option to write any value to the USER_DATA_nn at any time. However, the LTpowerPlay software and contract manufacturers use some of these commands for inventory control. Modifying the reserved USER_DATA_nn commands may lead to undesirable inventory control and incompatibility with these products.

These commands have 2 data bytes and are in register format.

IDENTIFICATION

COMMAND NAME	CMD CODE	DESCRIPTION	TYPE	DATA FORMAT	UNITS	NVM	DEFAULT VALUE
PMBUS_REVISION	0x98	PMBus revision supported by this device. Current revision is 1.1.	R Byte	Reg		FS	0x11
CAPABILITY	0x19	Summary of PMBus optional communication protocols supported by this device.	R Byte	Reg			0xB0
MFR_ID	0x99	The manufacturer ID of the LTC3883 in ASCII.	R String	ASC			LTC
MFR_MODEL	0x9A	Manufacturer part number in ASCII.	R String	ASC			LTC3883
MFR_SPECIAL_ID	0xE7	Manufacturer code representing the LTC3883.	R Word	Reg			0x430X

PMBus COMMAND DETAILS

PMBus_REVISION

The PMBUS_REVISION command indicates the revision of the PMBus to which the device is compliant. The LTC3883 is PMBus Version 1.1 compliant in both Part I and Part II.

This read-only command has one data byte.

CAPABILITY

This command provides a way for a host system to determine some key capabilities of a PMBus device.

The LTC3883 supports packet error checking, 400kHz bus speeds, and $\overline{\text{ALERT}}$ pin.

This read-only command has one data byte.

MFR_ID

The MFR_ID command indicates the manufacturer ID of the LTC3883 using ASCII characters.

This read-only command is in block format.

MFR_MODEL

The MFR_MODEL command indicates the manufacturer's part number of the LTC3883 using ASCII characters.

This read-only command is in block format.

MFR_SPECIAL_ID

The 16-bit word representing the part name and revision. 0x43 denotes the part is an LTC3883, X is adjustable by the manufacturer.

This read-only command has two data bytes.

FAULT WARNING AND STATUS

COMMAND NAME	CMD CODE	DESCRIPTION	TYPE	FORMAT	UNITS	NVM	DEFAULT VALUE
CLEAR_FAULTS	0x03	Clear any fault bits that have been set.	Send Byte				NA
MFR_CLEAR_PEAKS	0xE3	Clears all peak values.	Send Byte				NA
STATUS_BYTE	0x78	One byte summary of the unit's fault condition.	R/W Byte	Reg			NA
STATUS_WORD	0x79	Two byte summary of the unit's fault condition.	R/W Word	Reg			NA
STATUS_VOUT	0x7A	Output voltage fault and warning status.	R/W Byte	Reg			NA
STATUS_IOUT	0x7B	Output current fault and warning status.	R/W Byte	Reg			NA
STATUS_INPUT	0x7C	Input supply fault and warning status.	R/W Byte	Reg			NA
STATUS_ TEMPERATURE	0x7D	External temperature fault and warning status for READ_TEMERATURE_1.	R/W Byte	Reg			NA
STATUS_CML	0x7E	Communication and memory fault and warning status.	R/W Byte	Reg			NA
STATUS_MFR_ SPECIFIC	0x80	Manufacturer specific fault and state information.	R/W Byte	Reg			NA
MFR_PADS	0xE5	Digital status of the I/O pads.	R Word	Reg			NA
MFR_COMMON	0xEF	Manufacturer status bits that are common across multiple LTC chips.	R Byte	Reg			NA

PMBus COMMAND DETAILS

CLEAR_FAULTS

The CLEAR_FAULTS command is used to clear any fault bits that have been set. This command clears all bits in all status commands simultaneously. At the same time, the device negates (clears, releases) its $\overline{\text{ALERT}}$ pin signal output if the device is asserting the $\overline{\text{ALERT}}$ pin signal.

The CLEAR_FAULTS does not cause a unit that has latched off for a fault condition to restart. Units that have shut down for a fault condition are restarted when:

- The output is commanded through the RUN pin, the OPERATION command, or the combined action of the RUN pin and OPERATION command, to turn off and then to turn back on, or
- MFR_RESET command is issued.
- Bias power is removed and reapplied to the integrated circuit

If the fault is still present when the bit is cleared, the fault bit will remain set and the host notified by asserting the $\overline{\text{ALERT}}$ pin pin low. CLEAR_FAULTS can take up to 10µs to process. If a fault occurs within that time frame it may be cleared before the status register is set.

This write-only command has no data bytes.

MFR_CLEAR_PEAKS

The MFR_CLEAR_PEAKS command clears the MFR_*_PEAK data values. The MFR_RESET command will initiate this command.

This write-only command has no data bytes.

STATUS_BYTE

The STATUS_BYTE command returns one byte of information with a summary of the most critical faults. This is the lower byte of the status word.

The following status bits can be cleared by writing a 1 to their position in the STATUS_BYTE command:

[7] BUSY

This permits the user to clear status by means other than using the CLEAR_FAULTS command. This is also the only bit of this command that can initiate an $\overline{\text{ALERT}}$ event.

[6] Bit 6 of this command will be set whenever the PWM is turned off. Setting this bit does not assert $\overline{\text{ALERT}}$.

This command has one data byte.

STATUS_WORD

The STATUS_WORD command returns two bytes of information with a summary of the unit's fault condition. The low byte of STATUS_WORD is typically the same as the STATUS_BYTE command. When polling STATUS_WORD, if a fault occurs at the exact right time, the read value can have a bit set in the lower byte with no corresponding bits set in the upper byte. An immediate second read of STATUS_WORD will have the corresponding bits in the upper byte set.

The following status bits can be cleared by writing a 1 to their position in the STATUS_WORD command:

[8] UNKNOWN

[7] BUSY

PMBus COMMAND DETAILS

This permits the user to clear status by means other than using the CLEAR_FAULTS command. These are also the only bits of this command that can initiate an $\overline{\text{ALERT}}$ event.

[6] Bit 6 of this command will be set whenever the output is turned off.

[11] Bit 11 of this command will be set whenever the output voltage is below the POWER_GOOD_OFF threshold.

If any of the bits in the upper byte are set, NONE_OF_THE_ABOVE is asserted.

[14] Bit 14 of this command will be set by an IOUT_OC Warning or IOUT_OC Fault condition.

This command has two data bytes.

STATUS_VOUT

The STATUS_VOUT commands returns one byte with status information on V_{OUT}.

Bit 0 of this command is undefined and reserved in the LTC3883.

The user is permitted to write a 1 to any bit in this command to clear a specific fault. This permits the user to clear status by means other than using the CLEAR_FAULTS command.

Any supported fault bit in this command will initiate an $\overline{\text{ALERT}}$ event.

This command has one data byte.

STATUS_IOUT

The STATUS_IOUT commands returns one byte with status information on I_{OUT}.

Only bits 7, 6, and 5 are supported in the LTC3883.

The user is permitted to write a 1 to any bit in this command to clear a specific fault. This permits the user to clear status by means other than using the CLEAR_FAULTS command.

Any supported fault bit in this command will initiate an $\overline{\text{ALERT}}$ event.

This command has one data byte.

STATUS_INPUT

The STATUS_INPUT commands returns one byte with status information on V_{IN}.

Only bits 7, 5 and 1 are supported in the LTC3883.

The user is permitted to write a 1 to any bit in this command to clear a specific fault. This permits the user to clear status by means other than using the CLEAR_FAULTS command.

Any supported fault bit in this command will initiate an $\overline{\text{ALERT}}$ event. Bit 3 of this command is not latched and will not generate an $\overline{\text{ALERT}}$ even if it is set.

This command has one data byte.

STATUS_TEMPERATURE

The STATUS_TEMPERATURE commands returns one byte with status information on temperature. This command is related to the respective READ_TEMPERATURE_1 value.

PMBus COMMAND DETAILS

Only bits 7, 6 and 4 are supported in the LTC3883.

The user is permitted to write a 1 to any bit in this command to clear a specific fault. This permits the user to clear status by means other than using the CLEAR_FAULTS command.

Any supported fault bit in this command will initiate an $\overline{\text{ALERT}}$ event.

This command has one data byte.

STATUS_CML

The STATUS_CML commands returns one byte with the status information on received commands and system memory/logic.

Bit 2 of this command is not supported in the LTC3883.

If either bit 3 or bit 4 of this command is set, a serious and significant internal error has been detected. Continued operation of the part is not recommended if these bits are continuously set.

The user is permitted to write a 1 to any bit in this command to clear a specific fault. This permits the user to clear status by means other than using the CLEAR_FAULTS command.

Any supported fault bit in this command will initiate an $\overline{\text{ALERT}}$ event.

This command has one data byte.

STATUS_MFR_SPECIFIC

The STATUS_MFR_SPECIFIC commands returns one byte with the manufacturer specific status information.

The format for this byte is:

BIT	MEANING
7	Internal Temperature Fault Limit Exceeded.
6	Internal Temperature Warn Limit Exceeded.
5	Factory Trim Area NVM CRC Fault.
4	PLL is Unlocked
3	Fault Log Present
2	V_{DD33} UV or OV Fault
0	$\overline{\text{GPIO}}$ Pin Asserted Low by External Device

If any of these bits are set, the MFR bit in the STATUS_WORD will be set.

The user is permitted to write a 1 to any bit in this command to clear a specific fault. This permits the user to clear status by means other than using the CLEAR_FAULTS command. Exception: The fault log present bit can only be cleared by issuing the MFR_FAULT_LOG_CLEAR command.

Any supported fault bit in this command will initiate an $\overline{\text{ALERT}}$ event.

This command has one data byte.

PMBus COMMAND DETAILS

MFR_PADS

This command provides the user a means of directly reading the digital status of the I/O pins of the device. The bit assignments of this command are as follows:

BIT	ASSIGNED DIGITAL PIN
15	V_{DD33} OV Fault
14	V_{DD33} UV Fault
13	Reserved
12	Reserved
11	ADC Values Invalid, Occurs During Start-Up
10	Device Driving $\overline{\text{ALERT}}$ Low
9	Reserved
8	Power Good
7	Reserved
6	Device Driving RUN Low
5	Reserved
4	RUN
3	Reserved
2	Device Driving $\overline{\text{GPIO}}$ Low
1	Reserved
0	$\overline{\text{GPIO}}$

A 1 indicates the condition is true.

This read-only command has two data bytes.

MFR_COMMON

The MFR_COMMON command contains bits that are common to all LTC digital power and telemetry products.

BIT	MEANING
7	Chip Not Driving $\overline{\text{ALERT}}$ Low
6	Busy when Low
5	Calculations Not Pending
4	Output in Transition when Low
3	NVM Initialized
2	Reserved
1	SHARE_CLK Timeout
0	WP Pin Status

This read-only command has one data byte.

TELEMETRY

COMMAND NAME	CMD CODE	DESCRIPTION	TYPE	FORMAT	UNITS	NVM	DEFAULT VALUE
READ_VIN	0x88	Measured input supply voltage.	R Word	L11	V		NA
READ_IIN	0x89	Measured input supply current.	R Word	L11	A		NA
READ_VOUT	0x8B	Measured output voltage.	R Word	L16	V		NA

PMBus COMMAND DETAILS

READ_IOUT	0x8C	Measured output current.	R Word	L11	A		NA
READ_TEMPERATURE_1	0x8D	External diode junction temperature. This is the value used for all temperature related processing, including IOUT_CAL_GAIN.	R Word	L11	C		NA
READ_TEMPERATURE_2	0x8E	Internal junction temperature. Does not affect any other commands.	R Word	L11	C		NA
READ_DUTY_CYCLE	0x94	Duty cycle of the top gate control signal.	R Word	L11	%		NA
READ_POUT	0x96	Calculated output power.	R Word	L11	W		NA
READ_PIN	0x97	Calculated input power	R Word	L11	W		NA
MFR_IOUT_PEAK	0xD7	Report the maximum measured value of READ_IOUT since last MFR_CLEAR_PEAKS.	R Word	L11	A		NA
MFR_VOUT_PEAK	0xDD	Maximum measured value of READ_VOUT since last MFR_CLEAR_PEAKS.	R Word	L16	V		NA
MFR_VIN_PEAK	0xDE	Maximum measured value of READ_VIN since last MFR_CLEAR_PEAKS.	R Word	L11	V		NA
MFR_TEMPERATURE_1_PEAK	0xDF	Maximum measured value of external Temperature (READ_TEMPERATURE_1) since last MFR_CLEAR_PEAKS.	R Word	L11	C		NA
MFR_READ_IIN_CHAN_PEAK	0xE1	Maximum measured value of READ_IIN command since last MFR_CLEAR_PEAKS.	R Word	L11	A		NA
MFR_READ_ICHIP	0xE4	Measured current used by the LTC3883	R Word	L11	A		NA
MFR_READ_IIN_CHAN	0xED	Calculated input supply current based upon READ_IOUT and DUTY_CYCLE	R Word	L11	A		NA
MFR_TEMPERATURE_2_PEAK	0xF4	Peak internal die temperature since last MFR_CLEAR_PEAKS.	R Word	L11	C		NA

READ_VIN

The READ_VIN command returns the measured V_{IN} pin voltage, in volts added to READ_ICHIP • MFR_RVIN. This compensates for the IR voltage drop across the V_{IN} filter element due to the supply current of the LTC3883.

This read-only command has two data bytes and is formatted in Linear_5s_11s format.

READ_VOUT

The READ_VOUT command returns the measured output voltage in the same format as set by the VOUT_MODE command.

This read-only command has two data bytes and is formatted in Linear_16u format.

READ_IIN

The READ_IIN command returns the input current, in Amperes, as measured across the input current sense resistor (see also MFR_IIN_CAL_GAIN).

This read-only command has two data bytes and is formatted in Linear_5s_11s format.

READ_IOUT

The READ_IOUT command returns the average output current in amperes. The IOUT value is a function of:

a) the differential voltage measured across the I_{SENSE} pins

b) the IOUT_CAL_GAIN value

PMBus COMMAND DETAILS

Summary of the Status Commands

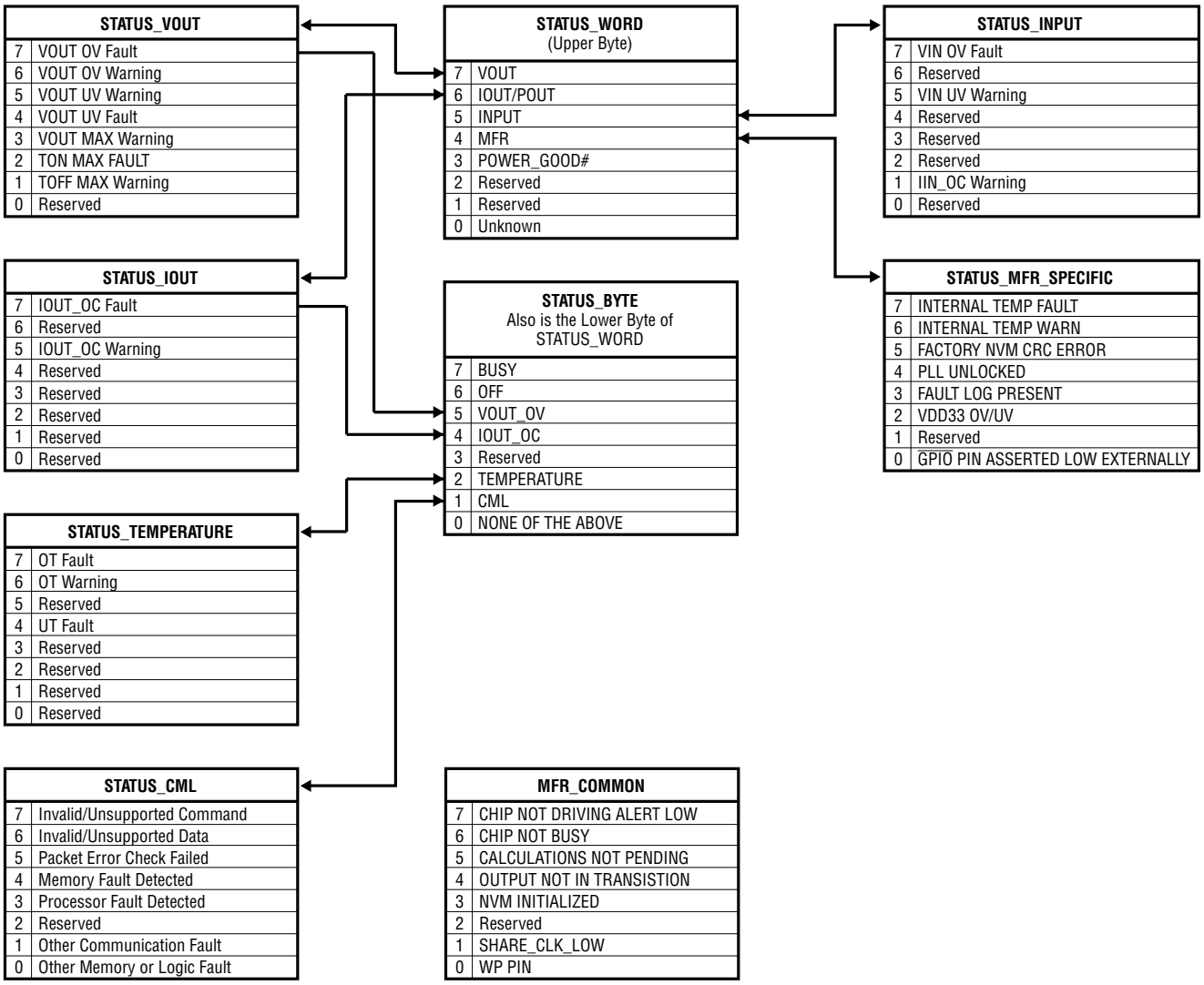

PMBus COMMAND DETAILS

c) the MFR_IOUT_CAL_GAIN_TC value, and

d) READ_TEMPERATURE_1 value

e) The MFR_TEMP_1_GAIN and the MFR_TEMP_1_OFFSET

f) The MFR_IOUT_CAL_GAIN_TAU_INV and MFR_IOUT_CAL_GAIN_THETA

This read-only command has two data bytes and is formatted in Linear_5s_11s format.

READ_TEMPERATURE_1

The READ_TEMPERATURE_1 command returns the temperature, in degrees Celsius, of the external sense element.

This read-only command has two data bytes and is formatted in Linear_5s_11s format.

READ_TEMPERATURE_2

The READ_TEMPERATURE_2 command returns the temperature, in degrees Celsius, of the internal sense element.

This read-only command has two data bytes and is formatted in Linear_5s_11s format.

READ_DUTY_CYCLE

The READ_DUTY_CYCLE command returns the duty cycle of controller, in percent.

This read-only command has two data bytes and is formatted in Linear_5s_11s format.

READ_POUT

The READ_POUT command is a reading of the DC/DC converter output power in Watts. The POUT is calculated based on the most recent correlated output voltage and current reading.

This read-only command has 2 data bytes and is formatted in Linear_5s_11s format.

READ_PIN

The READ_PIN command is a reading of the DC/DC converter input power in Watts. The PIN is calculated based on the most recent correlated input voltage and current reading.

This read-only command has 2 data bytes and is fromatted in Linear_5s_11s format.

MFR_IOUT_PEAK

The MFR_IOUT_PEAK command reports the highest current, in amperes, reported by the READ_IOUT measurement.

This command is cleared using the MFR_CLEAR_PEAKS command.

This read-only command has two data bytes and is formatted in Linear_5s_11s format.

MFR_VOUT_PEAK

The MFR_VOUT_PEAK command reports the highest voltage, in volts, reported by the READ_VOUT measurement.

This command is cleared using the MFR_CLEAR_PEAKS command.

This read-only command has two data bytes and is formatted in Linear_16u format.

PMBus COMMAND DETAILS

MFR_VIN_PEAK

The MFR_VIN_PEAK command reports the highest voltage, in volts, reported by the READ_VIN measurement.

This command is cleared using the MFR_CLEAR_PEAKS command.

This read-only command has two data bytes and is formatted in Linear_5s_11s format.

MFR_TEMPERATURE_1_PEAK

The MFR_TEMPERATURE_1_PEAK command reports the highest temperature, in degrees Celsius, reported by the READ_TEMPERATURE_1 measurement.

This command is cleared using the MFR_CLEAR_PEAKS command.

This read-only command has two data bytes and is formatted in Linear_5s_11s format.

MFR_READ_IIN_PEAK

The MFR_READ_IIN_PEAK command reports the highest current, in Amperes, reported by the READ_IIN measurement.

This command is cleared using the MFR_CLEAR_PEAKS command.

This command has two data bytes and is formatted in Linear_5s_11s format.

MFR_READ_ICHIP

The MFR_READ_ICHIP command returns the measured input current, in Amperes, used by the LTC3883.

This command has two data bytes and is formatted in Linear_5s_11s format.

MFR_READ_IIN_CHAN

The MFR_READ_IIN_CHAN command returns the calculated value of the input current, in Amperes, as a function of READ_IOUT and DUTY_CYCLE. For accurate values at low currents, the part must be in continuous conduction mode. If DCR sensing is used, the accuracy of the inductor DCR resistance, IOUT_CAL_GAIN, will effect the accuracy of the MFR_READ_IIN command.

This command has two data bytes and is formatted in Linear_5s_11s format.

MFR_TEMPERATURE_2_PEAK

The MFR_TEMPERATURE_2_PEAK command reports the highest temperature, in degrees Celsius, reported by the READ_TEMPERATURE_2 measurement.

This command is cleared using the MFR_CLEAR_PEAKS command.

This read-only command has two data bytes and is formatted in Linear_5s_11s format.

PMBus COMMAND DETAILS

NVM MEMORY COMMANDS

Store/Restore

COMMAND NAME	CMD CODE	DESCRIPTION	TYPE	FORMAT	UNITS	NVM	DEFAULT VALUE
STORE_USER_ALL	0x15	Store user operating memory to EEPROM.	Send Byte				NA
RESTORE_USER_ALL	0x16	Restore user operating memory from EEPROM.	Send Byte				NA
MFR_COMPARE_USER_ALL	0xF0	Compares current command contents with NVM.	Send Byte				NA

STORE_USER_ALL

The STORE_USER_ALL command instructs the PMBus device to copy the non-volatile user contents of the Operating Memory to the matching locations in the non-volatile User NVM memory.

Executing this command if the die temperature exceeds 85°C or is below 0°C is not recommended and the data retention of 10 years cannot be guaranteed. If the die temperature exceeds 130°C, the STORE_USER_ALL command is disabled. The command is re-enabled when the IC temperature drops below 125°C.

Communication with the LTC3883 and programming of the NVM can be initiated when VDD33 is available and VIN is not applied. To enable the part in this state, using global address 0x5B write MFR_EE_UNLOCK to 0x2B followed by 0xC4. The part can now be communicated with, and the project file updated. To write the updated project file to the NVM issue a STORE_USER_ALL command. When VIN is applied, a MFR_RESET must be issued to allow the PWM to be enabled and valid ADCs to be read.

This write-only command has no data bytes.

RESTORE_USER_ALL

The RESTORE_USER_ALL command instructs the PMBus device to copy the contents of the non-volatile User memory to the matching locations in the Operating Memory. The values in the Operating Memory are overwritten by the value retrieved from the User commands. When a RESTORE_USER_ALL command is issued, the RUN pin and SHARE_CLK pin are asserted low until the restore is complete. The RUN pin and SHARE_CLK pin are then released. The RUN pins are held low for the MFR_RESTART_DELAY. The RESTORE_USER_ALL command will place the value of all commands stored in NMV into the RAM ignoring the pin-strapped resistor configuration pins including ASEL. The MFR_RESET command is recommended to be used instead of RESTORE_USER_ALL because the MFR_RESET command always honors the ASEL pins and will honor the pin-strapped RCONFIG pins, if the part is programmed to respect them.

STORE_USER_ALL, MFR_COMPARE_USER_ALL and RESTORE_USER_ALL commands are disabled if the die exceeds 130°C and are not re-enabled until the die temperature drops below 125°C.

This write-only command has no data bytes.

MFR_COMPARE_USER_ALL

The MFR_COMPARE_USER_ALL command instructs the PMBus device to compare current command contents with what is stored in non-volatile memory. If the compare operation detects differences, a CML bit 0 fault will be generated.

This write-only command has no data bytes.

PMBus COMMAND DETAILS

Fault Logging

COMMAND NAME	CMD CODE	DESCRIPTION	TYPE	DATA FORMAT	UNITS	NVM	DEFAULT VALUE
MFR_FAULT_LOG	0xEE	Fault log data bytes. This sequentially retrieved data is used to assemble a complete fault log.	R Block	CF		Y	NA
MFR_FAULT_LOG_ STORE	0xEA	Command a transfer of the fault log from RAM to EEPROM. This causes the part to behave as if the PWM has faulted off.	Send Byte				NA
MFR_FAULT_LOG_CLEAR	0xEC	Initialize the EEPROM block reserved for fault logging and clear any previous fault logging locks.	Send Byte				NA

MFR_FAULT_LOG

The MFR_FAULT_LOG command allows the user to read the contents of the FAULT_LOG after the first fault occurrence since the last MFR_FAULT_LOG_CLEAR command was last written. The contents of this command are stored in non-volatile memory, and are cleared by the MFR_FAULT_LOG_CLEAR command. The length and content of this command are listed in Table 11. If the user accesses the MFR_FAULT_LOG command and no fault log is present, the command will return a data length of 0. If a fault log is present, the MFR_FAUTL_LOG will return a block of data 147 bytes long. If a fault occurs within the first second of applying power, some of the earlier pages in the fault log may not contain valid data. When a fault occurs and Fault Log is enabled, a header section and the last 6 ADC events are stored in NVM. If the Fault Log is read before a reset occurs, the most recent event is in location N (the first location). If the part resets or VIN is lost, the event may appear in any one of the 6 cyclical data locations.

NOTE: The approximate transfer time for this command is 3.4ms using a 400kHz clock.

This read-only command is in block format.

MFR_FAULT_LOG_STORE

The MFR_FAULT_LOG_STORE command forces the fault log operation to be written to NVM just as if a fault event occurred. This command will set bit 3 of the STATUS_MFR_SPECIFIC fault if bit 7 “Enable Fault Logging” is set in the MFR_CONFIG_ALL_LTC3883 command.

If the die temperature exceeds 130°C, the MFR_FAULT_LOG_STORE command is disabled until the IC temperature drops below 125°C.

This write-only command has no data bytes.

Table 11. Fault Logging

This table outlines the format of the block data from a read block data of the MFR_FAULT_LOG command.

Data Format Definitions				LIN 11 = PMBus = Rev 1.1, Part 2, section 7.1
				LIN 16 = PMBus Rev 1.1, Part 2, section 8. Mantissa portion only
				BYTE = 8 bits interpreted per definition of this command
DATA	**BITS**	**DATA FORMAT**	**BYTE NUM**	**BLOCK READ COMMAND**
Block Length		BYTE	147	The MFR_FAULT_LOG command is a fixed length of 147 bytes The block length will be zero if a data log event has not been captured
HEADER INFORMATION				
Fault Position		BYTE	0	Indicates the fault that caused the fault log to be activated.

PMBus COMMAND DETAILS

MFR_REAL_TIME	[7:0]	BYTE	1	48 bit binary counter. The value is the time since the last reset in 200µs increments.
	[15:8]	BYTE	2	
	[23:16]	BYTE	3	
	[31:24]	BYTE	4	
	[39:32]	BYTE	5	
	[47:40]	BYTE	6	
MFR_VOUT_PEAK	[15:8]	LIN 16	7	Peak READ_VOUT since last MFR_CLEAR_PEAKS command.
	[7:0]		8	
Reserved		BYTE	9	
Reserved		BYTE	10	
MFR_IOUT_PEAK	[15:8]	LIN 11	11	Peak READ_IOUT since last MFR_CLEAR_PEAKS command.
	[7:0]		12	
MFR_READ_IIN_CHAN_PEAK	[15:8]	LIN 11	13	Peak READ_IIN since last MFR_CLEAR_PEAKS command.
	[7:0]		14	
MFR_VIN_PEAK	[15:8]	LIN 11	15	Peak READ_VIN since last MFR_CLEAR_PEAKS command.
	[7:0]		16	
READ_TEMPERATURE_1	[15:8]	LIN 11	17	External temperature during last event.
	[7:0]		18	
Reserved		BYTE	19	Always returns 0x00.
Reserved		BYTE	20	Always returns 0x00.
READ_TEMPERATURE_2	[15:8]	LIN 11	21	Internal temperature sensor during last event
	[7:0]		22	
MFR_TEMPERATURE_1_PEAK	[15:8]	LIN 11	23	Peak READ_TEMPERATURE_1 since last MFR_CLEAR_PEAKS command.
	[7:0]		24	
Reserved		BYTE	25	Always returns 0x00.
Reserved		BYTE	26	Always returns 0x00.
CYCLICAL DATA				
EVENT n **(Data at Which Fault Occurred; Most Recent Data)**				Event “n” represents one complete cycle of ADC reads through the MUX at time of fault. Example: If the fault occurs when the ADC is processing step 15, it will continue to take readings through step 25 and then store the header and all 6 event pages to EEPROM
READ_VOUT	[15:8]	LIN 16	27	
	[7:0]		28	
Reserved		BYTE	29	Always returns 0x00.
Reserved		BYTE	30	Always returns 0x00.
READ_IOUT	[15:8]	LIN 11	31	
	[7:0]		32	
MFR_READ_IIN_CHAN	[15:8]	LIN 11	33	
	[7:0]		34	
READ_VIN	[15:8]	LIN 11	35	
	[7:0]		36	
READ_IIN	[15:8]	LIN 11	37	
	[7:0]		38	
STATUS_VOUT		BYTE	39	
Reserved		BYTE	40	Always returns 0x00.
STATUS_WORD	[15:8]	WORD	41	
	[7:0]		42	
MFR_READ_ICHIP	[15:8]	WORD	43	

PMBus COMMAND DETAILS

MFR_READ_ICHIP	[7:0]		44	
STATUS_MFR_SPECIFIC		BYTE	45	
Reserved		BYTE	46	Always returns 0x00.
EVENT n-1 (data measured before fault was detected)				
READ_VOUT	[15:8]	LIN 16	47	
	[7:0]		48	
Reserved		BYTE	49	Always returns 0x00.
Reserved		BYTE	50	Always returns 0x00.
READ_IOUT	[15:8]	LIN 11	51	
	[7:0]		52	
MFR_READ_IIN_CHAN	[15:8]	LIN 11	53	
	[7:0]		54	
READ_VIN	[15:8]	LIN 11	55	
	[7:0]		56	
READ_IIN	[15:8]	LIN 11	57	
	[7:0]		58	
STATUS_VOUT		BYTE	59	
Reserved		BYTE	60	Always returns 0x00.
STATUS_WORD	[15:8]	WORD	61	
	[7:0]		62	
Reserved		BYTE	63	Always returns 0x00.
Reserved		BYTE	64	Always returns 0x00.
STATUS_MFR_SPECIFIC		BYTE	65	
Reserved		BYTE	66	Always returns 0x00.
*				
*				
*				
EVENT n-5 (Oldest Recorded Data)				
READ_VOUT	[15:8]	LIN 16	127	
	[7:0]		128	
Reserved		BYTE	129	Always returns 0x00.
Reserved		BYTE	130	Always returns 0x00.
READ_IOUT	[15:8]	LIN 11	131	
	[7:0]		132	
MFR_READ_IIN_CHAN	[15:8]	LIN 11	133	
	[7:0]		134	
READ_VIN	[15:8]	LIN 11	135	
	[7:0]		136	
READ_IIN	[15:8]	LIN 11	137	
	[7:0]		138	
STATUS_VOUT		BYTE	139	
Reserved		BYTE	140	Always returns 0x00.
STATUS_WORD	[15:8]	WORD	141	
	[7:0]		142	
Reserved		BYTE	143	Always returns 0x00.

PMBus COMMAND DETAILS

Reserved		BYTE	144	Always returns 0x00.
STATUS_MFR_SPECIFIC		BYTE	145	
Reserved		BYTE	146	Always returns 0x00.

Table 11a: Explanation of Position_Fault Values

POSITION_FAULT VALUE	SOURCE OF FAULT LOG
0xFF	MFR_FAULT_LOG_STORE
0x00	TON_MAX_FAULT
0x01	VOUT_OV_FAULT
0x02	VOUT_UV_FAULT
0x03	IOUT_OC_FAULT
0x05	TEMP_OT_FAULT
0x06	TEMP_UT_FAULT
0x07	VIN_OV_FAULT
0x0A	MFR_TEMP_2_OT_FAULT

MFR_FAULT_LOG_CLEAR

The MFR_FAULT_LOG_CLEAR command will erase the fault log file stored values. It will also clear bit 3 in the STATUS_MFR_SPECIFIC command. After a clear is issued, the status can take up to 8ms to clear.

This write-only command is send bytes.

Block Memory Write/Read

COMMAND NAME	CMD CODE	DESCRIPTION	TYPE	DATA FORMAT	UNITS	NVM	DEFAULT VALUE
MFR_EE_UNLOCK	0xBD	Unlock user EEPROM for access by MFR_EE_ERASE and MFR_EE_DATA commands.	R/W Byte	Reg			NA
MFR_EE_ERASE	0xBE	Initialize user EEPROM for bulk programming by MFR_EE_DATA.	R/W Byte	Reg			NA
MFR_EE_DATA	0xBF	Data transferred to and from EEPROM using sequential PMBus word reads or writes. Supports bulk programming.	R/W Word	Reg			NA

All the NVM commands are disabled if the die temperature exceeds 130°C. NVM commands are re-enabled when the die temperature drops below 125°C.

MFR_EE_UNLOCK

Multiple writes to MFR_EE_UNLOCK with the appropriate unlock keys are used to enable MFR_EE_ERASE and MFR_EE_DATA access and configure PEC.

Communication with the LTC3883 and programming of the NVM can be initiated when VDD33 is applied and VIN is not. To enable the part in this state, use global address 0x5B command MFR_EE_UNLOCK data 0x2B followed by address 0x5B command MFR_EE_UNLOCK data 0xC4. When VIN is applied, a MFR_RESET must be issued to allow the PWM to be enabled and valid ADCs to be read.

Writing 0x2B followed by 0xD4 clears PEC, resets the EEPROM address pointer and unlocks the part for EEPROM erase and data command writes.

PMBus COMMAND DETAILS

Writing 0x2B followed by 0xD5 sets the PEC, resets the EEPROM address pointer and unlocks the part for EEPROM erase and data command writes.

Writing 0x2B followed by 0x91 and 0xE4 clears PEC, resets the EEPROM address pointer and unlocks the part for EEPROM data reads of all locations.

Writing 0x2B followed by 0x91 and 0xE5 sets PEC, resets the EEPROM address pointer and unlocks the part for EEPROM data reads of all locations.

MFR_EE_ERASE

A single write after the appropriate unlock key erases the EEPROM allowing subsequent data writes. This command may be read to indicate if an EEPROM access is in progress.

A value of 0x2B will erase the EEPROM. If the part is busy writing or erasing the EEPROM a non-zero value will be returned.

MFR_EE_DATA

Sequential writes or reads perform block loads or restores from the EEPROM. Successive MFR_EE_DATA word writes will enter the EEPROM until it is full. Extra writes will lock the part. The first write is to the lowest address. The first read returns the 16 bit EEPROM packing revision ID. The second read returns the number of 16 bit words available. Subsequent reads return EEPROM data starting with the lowest address.

TYPICAL APPLICATIONS

High Efficiency 500kHz 1.2V Step-Down Converter with External V_{CC}

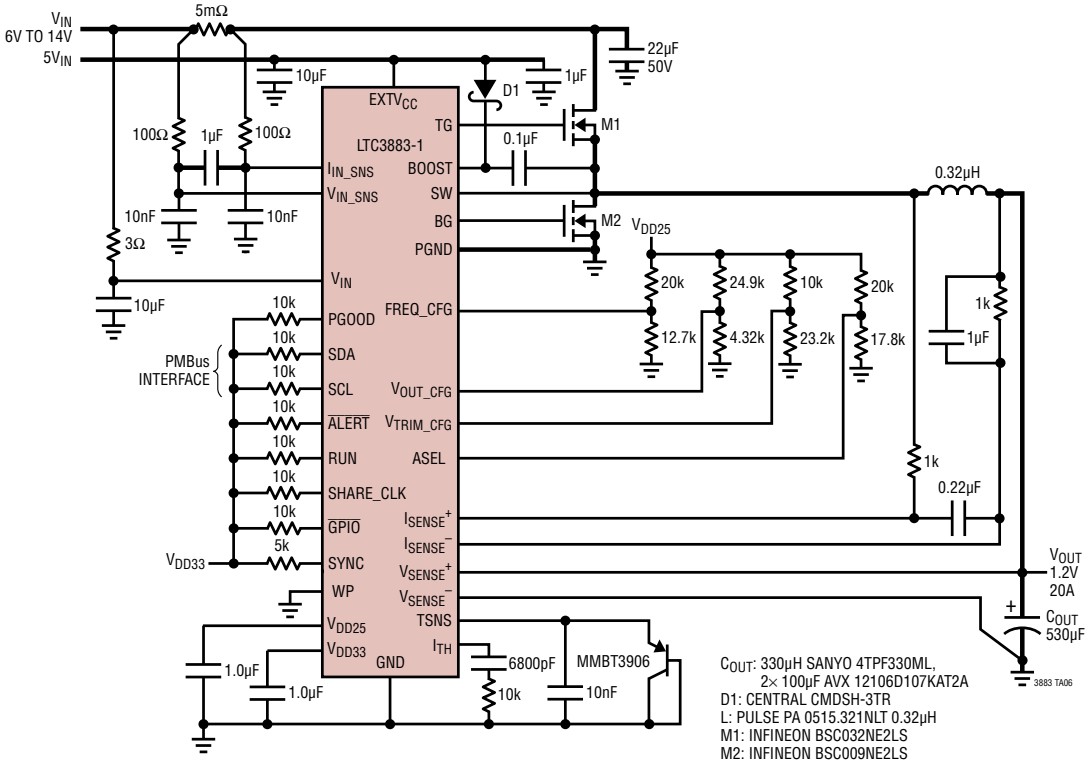

High Efficiency 500kHz 2.5V Step-Down Converter with Sense Resistor, No Input Current Sense

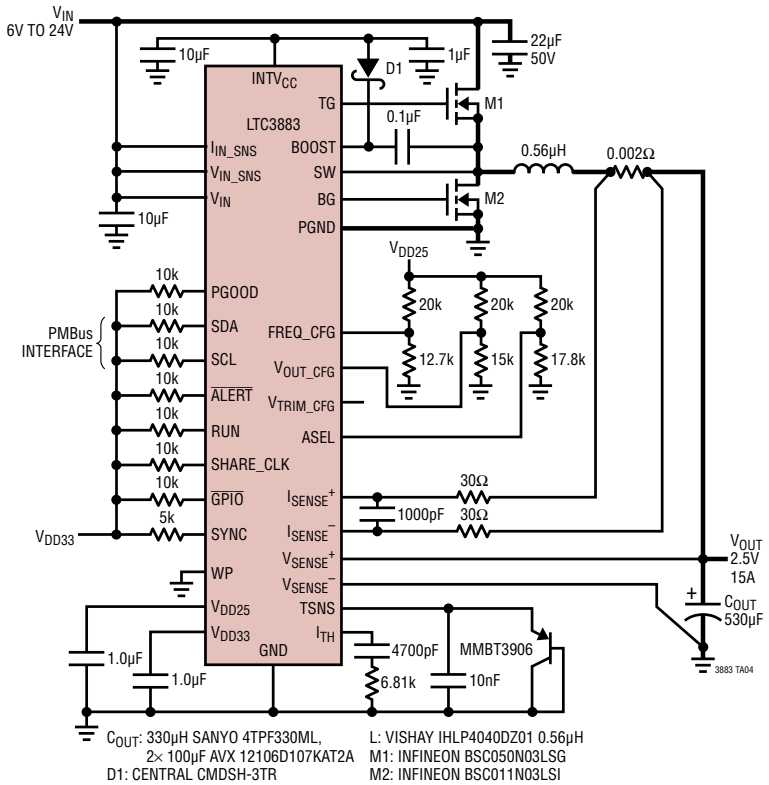

TYPICAL APPLICATIONS

High Efficiency 425kHz 1V Step-Down Converter with Power Block

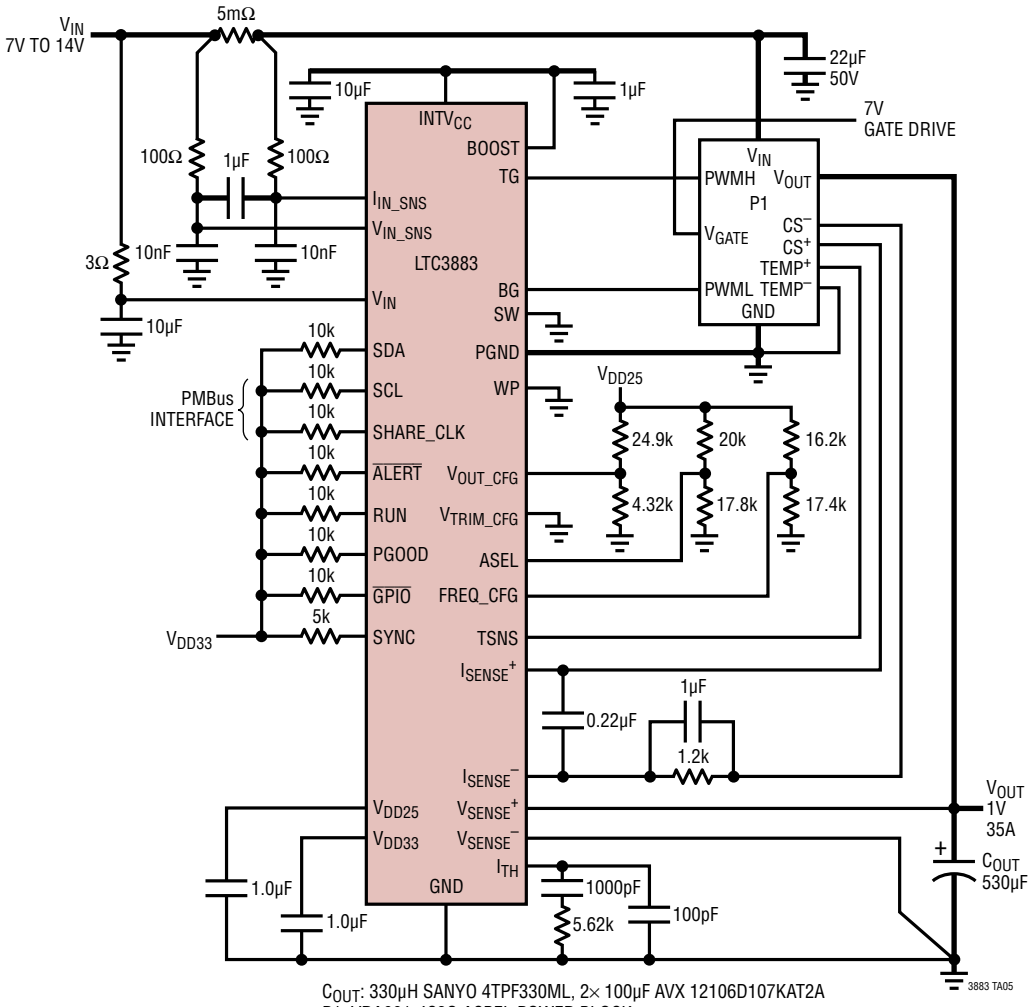

C_{OUT}: 330µH SANYO 4TPF330ML, 2× 100µF AVX 12106D107KAT2A
P1: VRA001-4C3G ACBEL POWER BLOCK

TYPICAL APPLICATIONS

High Efficiency 500kHz 2-Phase 1.8V Step-Down Converter with Sense Resistors

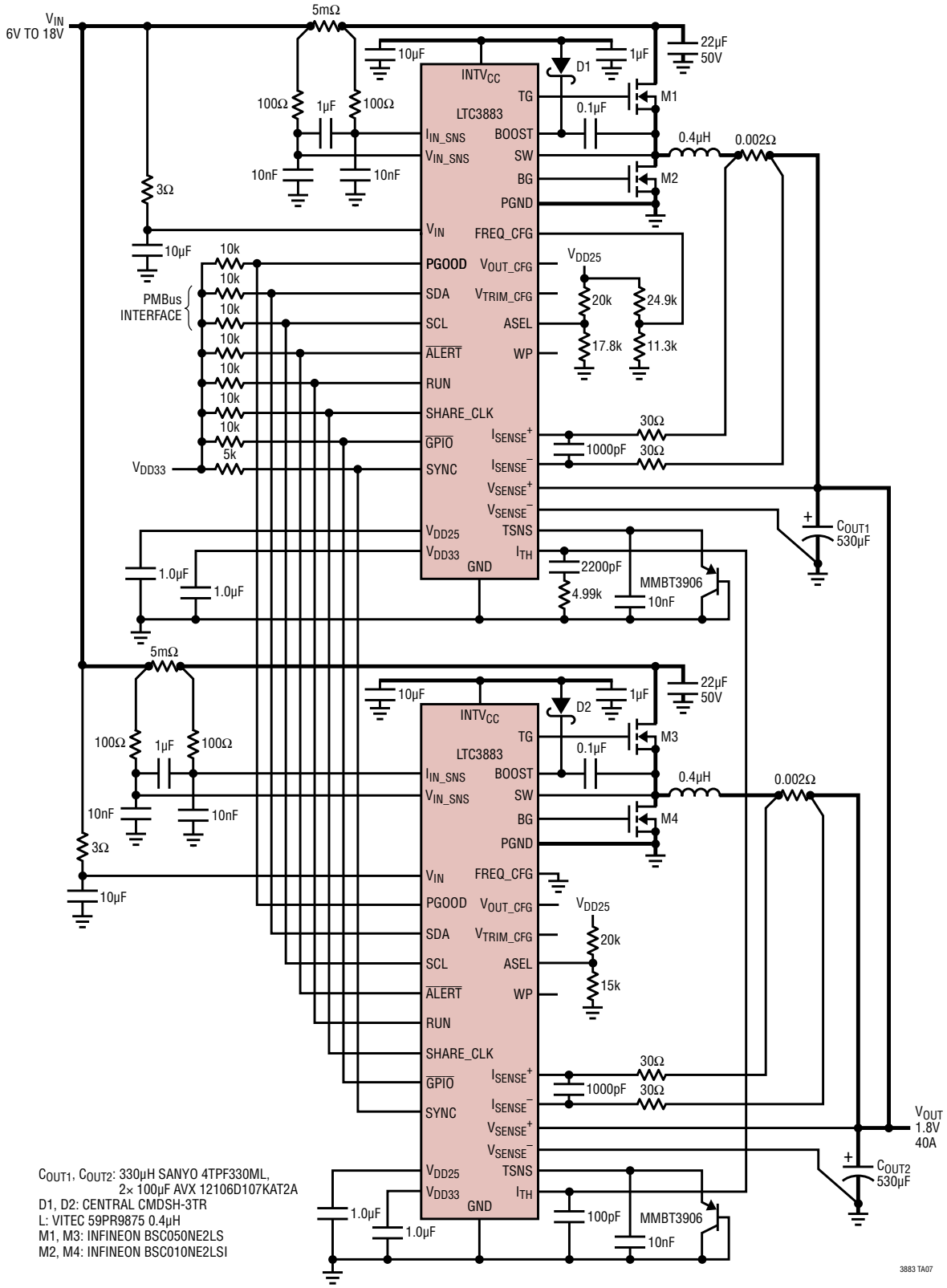

COUT1, COUT2: 330µH SANYO 4TPF330ML,
2× 100µF AVX 12106D107KAT2A
D1, D2: CENTRAL CMDSH-3TR
L: VITEC 59PR9875 0.4µH
M1, M3: INFINEON BSC050NE2LS
M2, M4: INFINEON BSC010NE2LSI

TYPICAL APPLICATIONS

High Efficiency 3-Phase 425kHz 1.8V Step-Down Converter with Input Current Sense

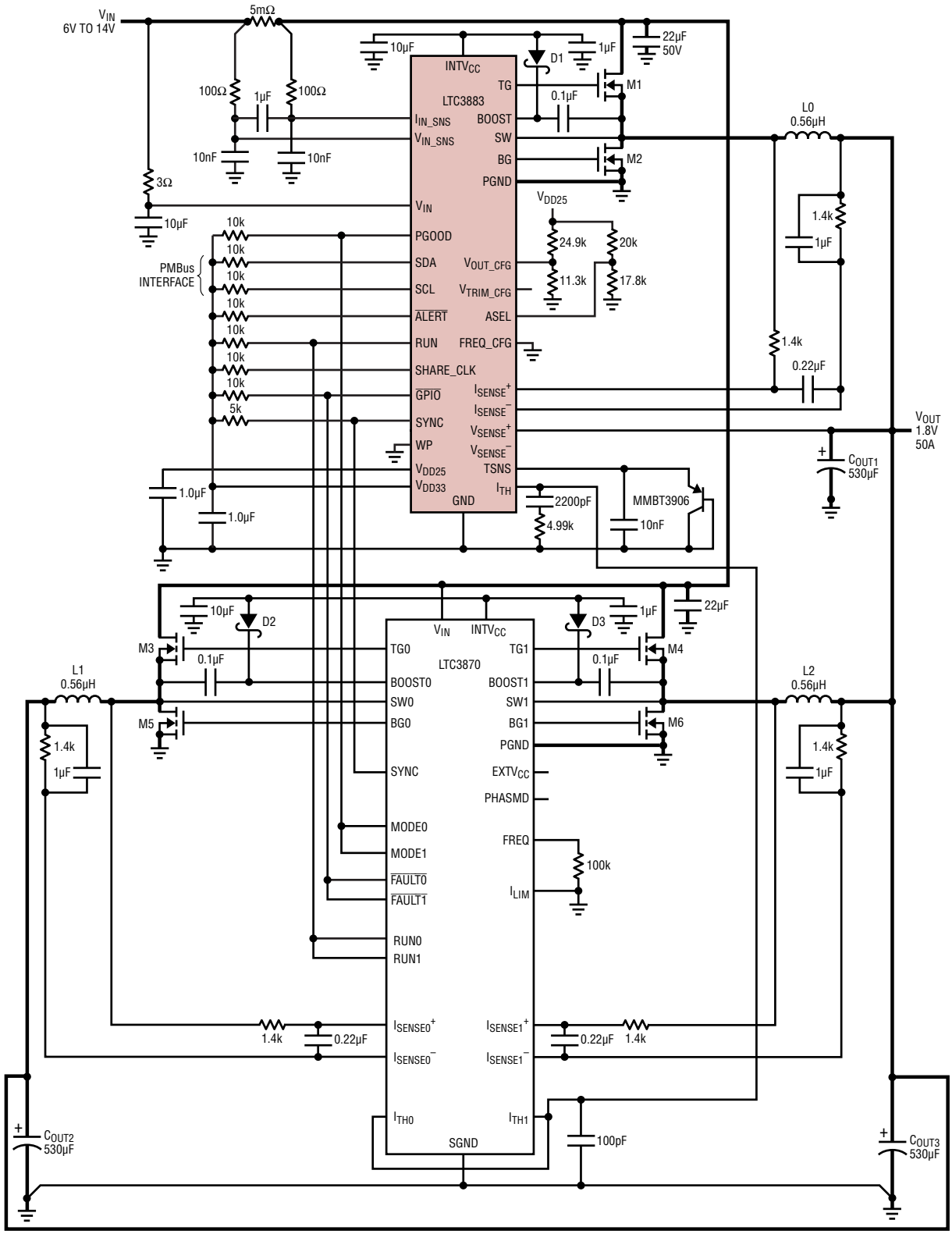

D1-D3: CENTRAL CMDSH-3TR
L0-L2: VISHAY IHLP-4040DZ-11 0.56µH

M1, M3, M4: INFINEON BSC050NE2LS
M2, M5, M6: INFINEON BSC010NE2LSI

C_{OUT1}, C_{OUT2}, C_{OUT3}: 330µH SANYO 4TPF330ML,
2× 100µF AVX 12106D107KAT2A

PACKAGE DESCRIPTION

Please refer to http://www.linear.com/designtools/packaging/ for the most recent package drawings.

UH Package
32-Lead Plastic QFN (5mm × 5mm)
(Reference LTC DWG # 05-08-1693 Rev D)

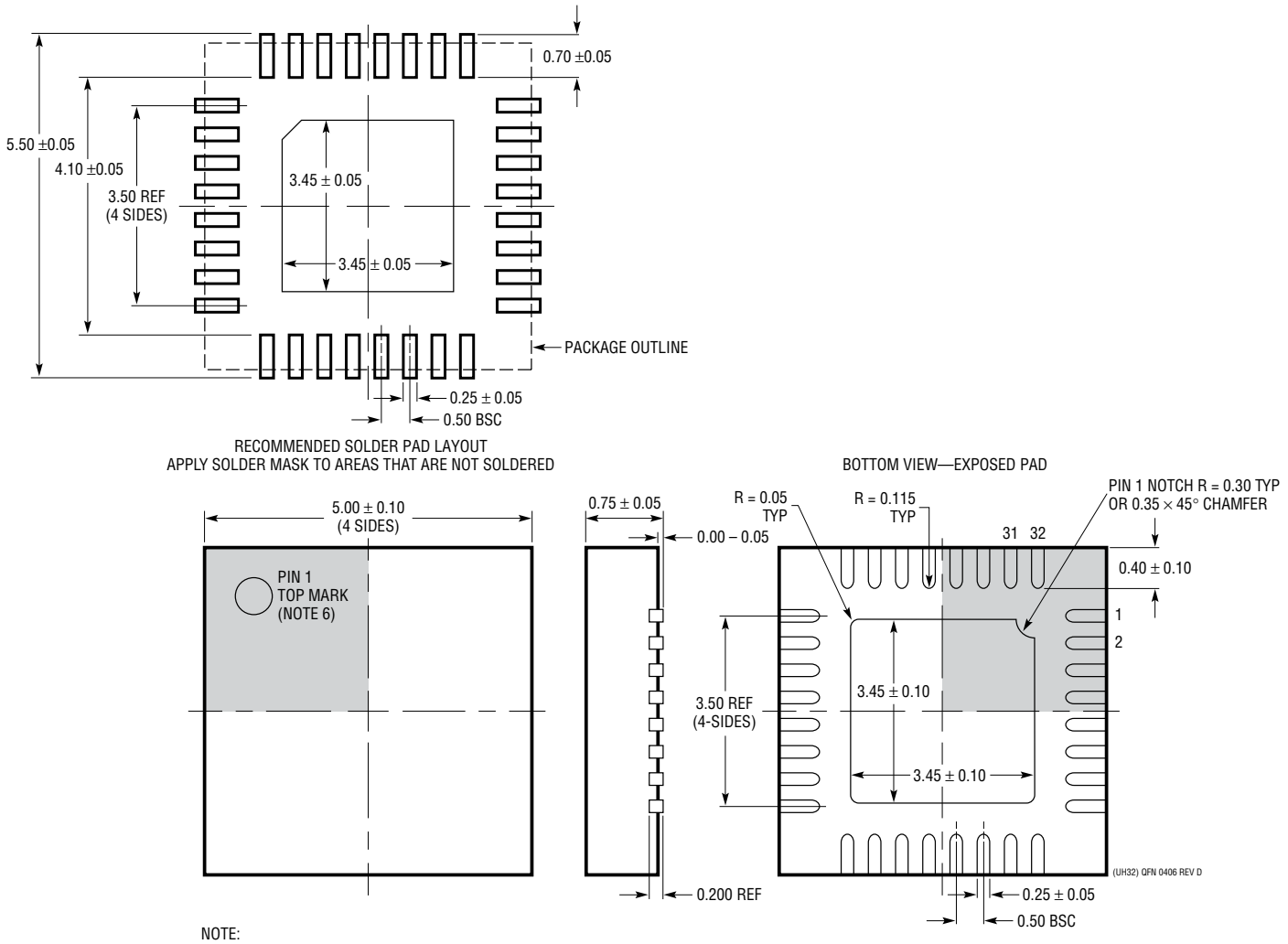

NOTE:
1. DRAWING PROPOSED TO BE A JEDEC PACKAGE OUTLINE
   M0-220 VARIATION WHHD-(X) (TO BE APPROVED)
2. DRAWING NOT TO SCALE
3. ALL DIMENSIONS ARE IN MILLIMETERS
4. DIMENSIONS OF EXPOSED PAD ON BOTTOM OF PACKAGE DO NOT INCLUDE
   MOLD FLASH. MOLD FLASH, IF PRESENT, SHALL NOT EXCEED 0.20mm ON ANY SIDE
5. EXPOSED PAD SHALL BE SOLDER PLATED
6. SHADED AREA IS ONLY A REFERENCE FOR PIN 1 LOCATION
   ON THE TOP AND BOTTOM OF PACKAGE

REVISION HISTORY

REV	DATE	DESCRIPTION	PAGE NUMBER
A	11/13	Changed V_{OUT} range to 5.4V. Added patent number.	1
		Added SYNC to the Absolute Maximum Ratings.	4
		Fixed conditions on the LSB step size.	6
		Deleted "and," and added "The BG, TG and RUN pins are held low. The $\overline{GPIO}$ pin is in high impedance mode."	17
		Deleted "ARA command..."	23, 24
		Deleted five instances of "MFR_REGISTERS"	33, 35
		Changed RUN to SHARE_CLK. Added text.	45
		Deleted NVM.	50
		Changed "IOUT_OC_FAULT_LIMIT" to "Peak Current Limit"	77
		Deleted MFR registers. Added text to the CLEAR_FAULTS and STATUS_WORD sections.	91-93
		Revised patent note.	112
B	7/14	Change Electrical Characteristics condition from T_A = 25°C to T_J = 25°C	5, 6, 7, 8
		Reduced minimum time to react to command	24, 65, 81, 82
		Updated P_{SYNC} equation	58
		Revised schematic	109

LINEAR TECHNOLOGY

Information furnished by Linear Technology Corporation is believed to be accurate and reliable. However, no responsibility is assumed for its use. Linear Technology Corporation makes no representation that the interconnection of its circuits as described herein will not infringe on existing patent rights.

TYPICAL APPLICATION

High Efficiency 500kHz 1.8V Step-Down Converter with DCR Sense

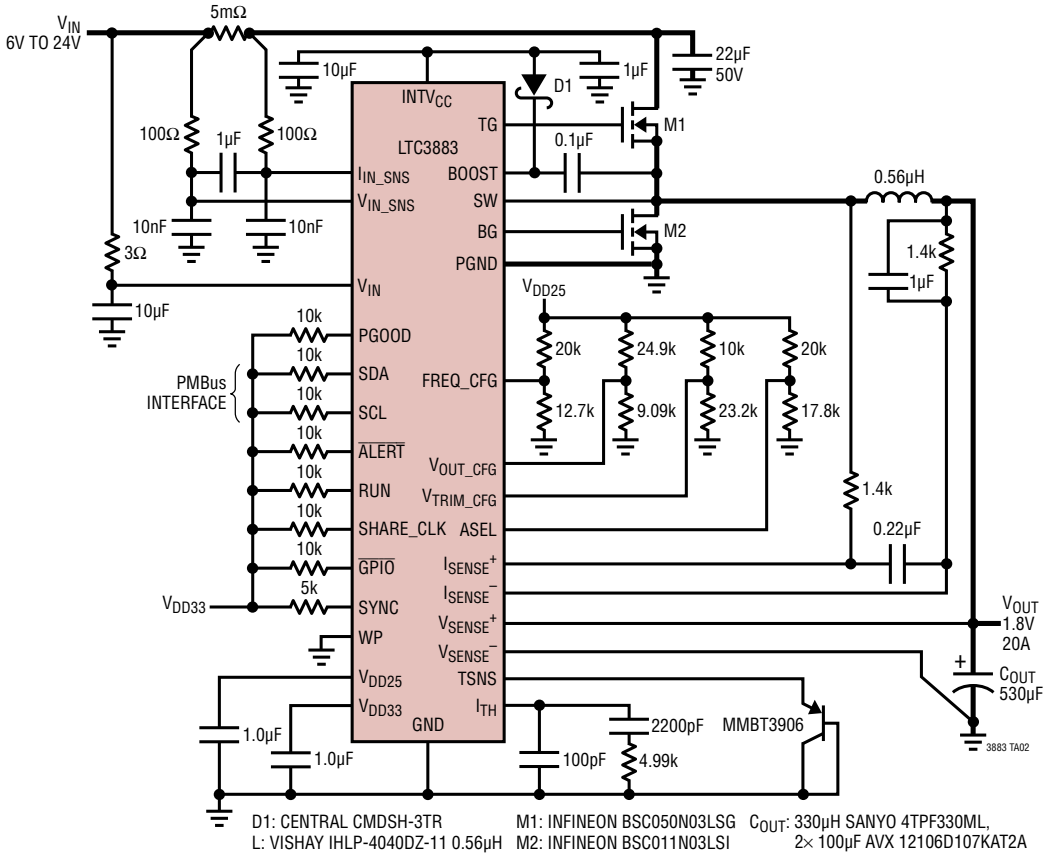

RELATED PARTS

PART NUMBER	DESCRIPTION	COMMENTS
LTC3880/LTC3880-1	Dual Output Multiphase Step-Down Controller with Digital Power System Management	V_{IN} Up to 24V, 0.5V ≤ V_{OUT} ≤ 5.5V, Analog Control Loop, I^2C/PMBus, Interface with EEPROM and 16-Bit ADC
LTC3866	Sub Milli-Ohm Current Mode Synchronous Step-Down Controller with Remote Sense	PLL Fixed Frequency 250kHz to 750kHz, 4V ≤ V_{IN} ≤ 38V, 0.6V ≤ V_{OUT} ≤ 5V, 4mm × 4mm QFN-24, TSSOP-24E
LTC3867	Synchronous Step-Down Controller with Differential Remote Sense and Nonlinear Control	PLL Fixed Operating Frequency 250kHz to 750kHz, 4V ≤ V_{IN} ≤ 38V, 0.6V ≤ V_{OUT} ≤ 14V, 4mm × 4mm QFN-24
LTC3833	Fast Accurate Step-Down Controller with Differential Output Sensing and up to 2MHz Frequency	Very Fast Transient Response, $t_{ON(MIN)}$ = 20ns, 4.5V ≤ V_{IN} ≤ 38V, 0.6V ≤ V_{OUT} ≤ 5.5V, TSSOP-20E, 3mm × 4mm QFN-20
LTC3878/LTC3879	No R_{SENSE}™ Constant On-Time Synchronous Step-Down Controller	Very Fast Transient Response, $t_{ON(MIN)}$ = 43ns, 4V ≤ V_{IN} ≤ 38V, 0.8V ≤ V_{OUT} ≤ 0.9V_{IN}, SSOP-16, MSOP-16E, 3mm × 3mm QFN-16
LTC3870	PolyPhase Step-Down Slave Controller for LTC3880/ LTC3883 with Digital Power System Management	LTC3880/LTC3883 Slave Extender, 4.5V ≤ V_{IN} ≤ 60V, SYNC Frequency Range: 100kHz to 1MHz, 28-Pin 4mm × 5mm QFN
LTC3861	Dual, Multiphase, Synchronous Step-Down Controller with Diff Amp and Three-State Output Drive	Operates with Power Blocks, DR MOS Devices or External MOSFETs, 3V ≤ V_{IN} ≤ 24V, Up to 2.25MHz Operating Frequency
LTC2978	Octal, PMBus Compliant Power Supply Monitor Supervisor, Sequencer and Margin Controller	Fault Logging to Internal EPROM, Monitors Eight Output Voltage Channels and One Input Voltage

This product has a license from PowerOne, Inc. related to digital power technology as set forth in U.S. Patent 7000125 and other related patents owned by PowerOne, Inc. This license does not extend to standalone power supply products.

Linear Technology Corporation
1630 McCarthy Blvd., Milpitas, CA 95035-7417
(408) 432-1900 • FAX: (408) 434-0507 • www.linear.com/LTC3883
LT 0714 REV B • PRINTED IN USA
LINEAR TECHNOLOGY
LINEAR TECHNOLOGY CORPORATION 2012