400mA Step-Up DC/DC Converter with Maximum Power Point Control and 250mV Start-Up

FEATURES

- **Low Start-Up Voltage: 250mV**
- **Maximum Power Point Control**
- **Wide V_{IN} Range: 225mV to 5V**
- **Auxiliary 6mA LDO Regulator**
- **Burst Mode® Operation: I_Q = 24µA**
- Output Disconnect and Inrush Current Limiting
- $V_{IN} > V_{OUT}$ Operation
- Antiringing Control
- Soft Start
- Automatic Power Adjust
- Power Good Indicator
- 10-Lead 3mm × 3mm × 0.75mm DFN and 12-Lead MSOP Packages

APPLICATIONS

- Solar Powered Battery/Supercapacitor Chargers
- Energy Harvesting
- Remote Industrial Sensors
- Low Power Wireless Transmitters
- Cell Phone, MP3, PMP and GPS Accessory Chargers

DESCRIPTION

The LTC®3105 is a high efficiency step-up DC/DC converter that can operate from input voltages as low as 225mV. A 250mV start-up capability and integrated maximum power point controller (MPPC) enable operation directly from low voltage, high impedance alternative power sources such as photovoltaic cells, TEGs (thermoelectric generators) and fuel cells. A user programmable MPPC set point maximizes the energy that can be extracted from any power source. Burst Mode operation, with a proprietary self adjusting peak current, optimizes converter efficiency and output voltage ripple over all operating conditions.

The AUX powered 6mA LDO provides a regulated rail for external microcontrollers and sensors while the main output is charging. In shutdown, I_Q is reduced to 10µA and integrated thermal shutdown offers protection from overtemperature faults. The LTC3105 is offered in 10-lead 3mm × 3mm × 0.75mm DFN and 12-lead MSOP packages.

LT, LTC, LTM, Linear Technology, the Linear logo and Burst Mode are registered trademarks and ThinSOT is a trademark of Linear Technology Corporation. All other trademarks are the property of their respective owners.

TYPICAL APPLICATION

Single Photovoltaic Cell Li-Ion Trickle Charger

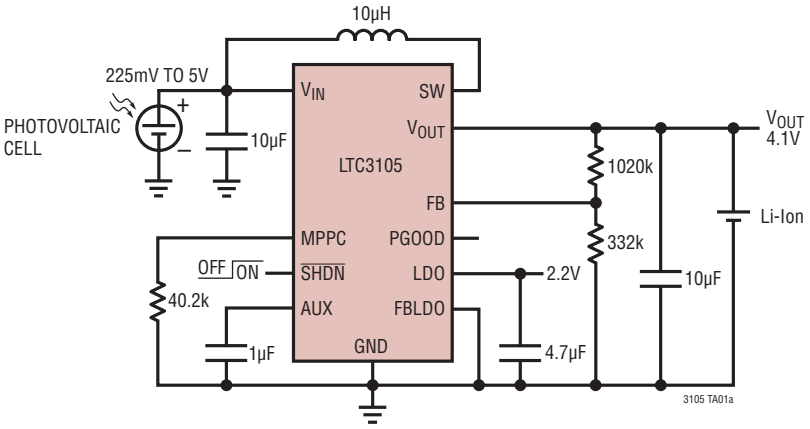

Output Current vs Input Voltage

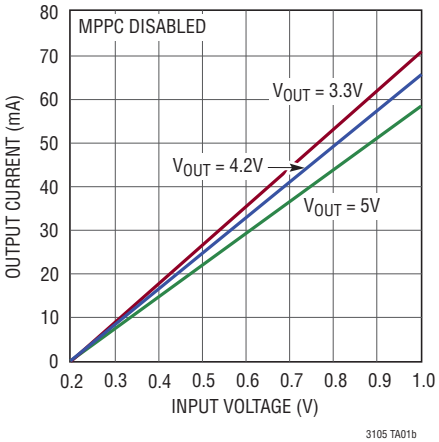

ABSOLUTE MAXIMUM RATINGS (Note 1)

SW Voltage
- DC ..... –0.3V to 6V
- Pulsed (<100ns) ..... –1V to 7V

Voltage, All Other Pins ..... –0.3V to 6V
Operating Junction Temperature Range (Note 2) ..... –40°C to 85°C
Maximum Junction Temperature (Note 4) ..... 125°C
Storage Temperature ..... –65°C to 150°C
Lead Temperature (Soldering, 10 sec.)
- MS Package ..... 300°C

PIN CONFIGURATION

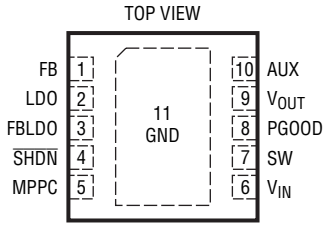

DD PACKAGE
10-LEAD (3mm × 3mm) PLASTIC DFN

T_{JMAX} = 125°C, θ_{JA} = 43°C/W, θ_{JC} = 3°C/W
EXPOSED PAD (PIN 11) IS GND, MUST BE SOLDERED TO PCB

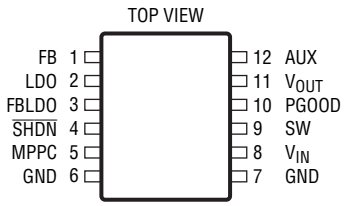

MS PACKAGE
12-LEAD PLASTIC MSOP

T_{JMAX} = 125°C, θ_{JA} = 130°C/W, θ_{JC} = 21°C/W

ORDER INFORMATION

LEAD FREE FINISH	TAPE AND REEL	PART MARKING	PACKAGE DESCRIPTION	TEMPERATURE RANGE
LTC3105EDD#PBF	LTC3105EDD#TRPBF	LFQC	10-Lead (3mm × 3mm) Plastic DFN	–40°C to 85°C
LTC3105EMS#PBF	LTC3105EMS#TRPBF	3105	12-Lead Plastic MSOP	–40°C to 85°C

Consult LTC Marketing for parts specified with wider operating temperature ranges.
Consult LTC Marketing for information on non-standard lead based finish parts.

For more information on lead free part marking, go to: http://www.linear.com/leadfree/
For more information on tape and reel specifications, go to: http://www.linear.com/tapeandreel/

ELECTRICAL CHARACTERISTICS

The ● denotes the specifications which apply over the full operating junction temperature range, otherwise specifications are at T_A = 25°C (Note 2). V_{AUX} = V_{OUT} = 3.3V, V_{LDO} = 2.2V, V_{IN} = 0.6V, unless otherwise noted.

PARAMETER	CONDITIONS		MIN	TYP	MAX	UNITS
Step-Up Converter						
Input Operating Voltage		●	0.225		5	V
Input Start-Up Voltage	(Note 5) T_J = 0°C to 85°C (Note 5)	●		0.25	0.4 0.36	V V
Output Voltage Adjust Range		●	1.5		5.25	V
Feedback Voltage (FB Pin)		●	0.984	1.004	1.024	V
V_{OUT} I_Q in Operation	V_{FB} = 1.10V			24		µA
V_{OUT} I_Q in Shutdown	$\overline{SHDN}$ = 0V			10		µA
MPPC Pin Output Current	V_{MPPC} = 0.6V		9.72	10	10.28	µA
$\overline{SHDN}$ Input Logic High Voltage		●	1.1			V
$\overline{SHDN}$ Input Logic Low Voltage		●			0.3	V
N-Channel SW Pin Leakage Current	V_{IN} = V_{SW} = 5V, $V_{\overline{SHDN}}$ = 0V			1	10	µA
P-Channel SW Pin Leakage Current	V_{IN} = V_{SW} = 0V, V_{OUT} = V_{AUX} = 5.25V			1	10	µA
N-Channel On-Resistance: SW to GND				0.5		Ω
P-Channel On-Resistance: SW to V_{OUT}				0.5		Ω
Peak Current Limit	V_{FB} = 0.90V, V_{MPPC} = 0.4V (Note 3)		0.4	0.5		A
Valley Current Limit	V_{FB} = 0.90V, V_{MPPC} = 0.4V (Note 3)		0.275	0.35		A
PGOOD Threshold (% of Feedback Voltage)	V_{OUT} Falling		85	90	95	%
LDO Regulator						
LDO Output Adjust Range	External Feedback Network, V_{AUX} > V_{LDO}	●	1.4		5	V
LDO Output Voltage	V_{FBLDO} = 0V	●	2.148	2.2	2.236	V
Feedback Voltage (FBLDO Pin)	External Feedback Network	●	0.984	1.004	1.024	V
Load Regulation	I_{LDO} = 1mA to 6mA			0.40		%
Line Regulation	V_{AUX} = 2.5V to 5V			0.15		%
Dropout Voltage	I_{LDO} = 6mA, V_{OUT} = V_{AUX} = 2.2V			105		mV
LDO Current Limit	V_{LDO} 0.5V Below Regulation Voltage	●	6	12		mA
LDO Reverse-Blocking Leakage Current	V_{IN} = V_{AUX} = V_{OUT} = 0V, $V_{\overline{SHDN}}$ = 0V			1		µA

Note 1: Stresses beyond those listed under Absolute Maximum Ratings may cause permanent damage to the device. Exposure to any Absolute Maximum Rating condition for extended periods may affect device reliability and lifetime.

Note 2: The LTC3105 is tested under pulsed load conditions such that $T_J \approx T_A$. The LTC3105E is guaranteed to meet specifications from 0°C to 85°C junction temperature. Specifications over the –40°C to 85°C operating junction temperature range are assured by design, characterization and correlation with statistical process controls. Note that the maximum ambient temperature consistent with these specifications is determined by specific operating conditions in conjunction with board layout, the rated package thermal impedance and other environmental factors.

Note 3: Current measurements are performed when the LTC3105 is not switching. The current limit values measured in operation will be somewhat higher due to the propagation delay of the comparators.

Note 4: This IC includes over temperature protection that is intended to protect the device during momentary overload conditions. Junction temperature will exceed 125°C when overtemperature protection is active. Continuous operation above the specified maximum operating junction temperature may impair device reliability.

Note 5: The LTC3105 has been optimized for use with high impedance power sources such as photovoltaic cells and thermoelectric generators. The input start-up voltage is measured using an input voltage source with a series resistance of approximately 200mΩ and MPPC enabled. Use of the LTC3105 with lower resistance voltage sources or with MPPC disabled may result in a higher input start-up voltage.

TYPICAL PERFORMANCE CHARACTERISTICS

T_A = 25°C, V_{AUX} = V_{OUT} = 3.3V, V_{LDO} = 2.2V, V_{IN} = 0.6V, unless otherwise noted.

Minimum Input Start-Up Voltage vs Temperature

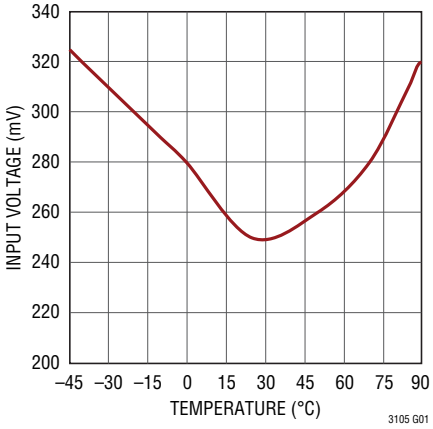

Shutdown Thresholds vs Input Voltage

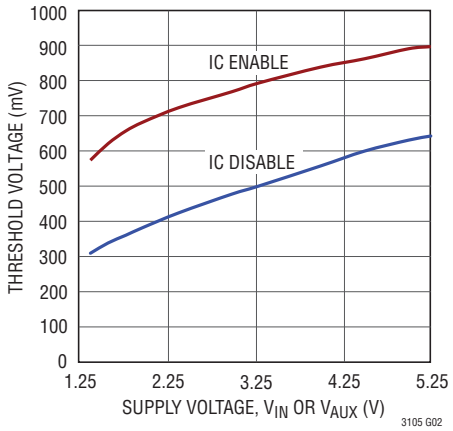

IC Enable Delay vs Input Voltage

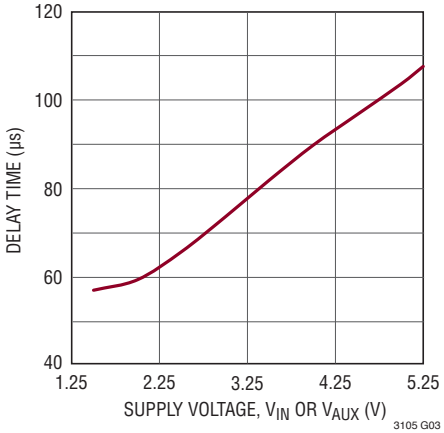

MPPC Current Variation vs Temperature

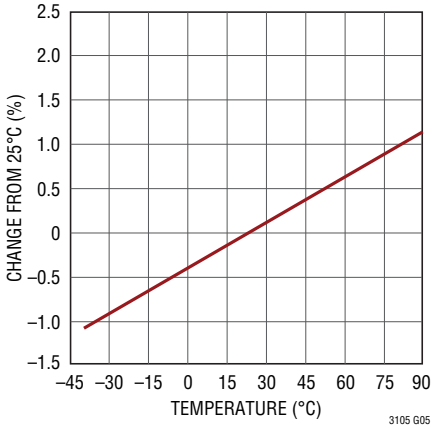

LDO Soft-Start Duration vs LDO Load

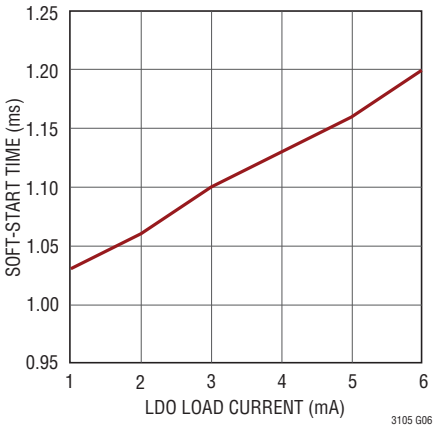

V_{OUT} I_Q vs Temperature During Shutdown

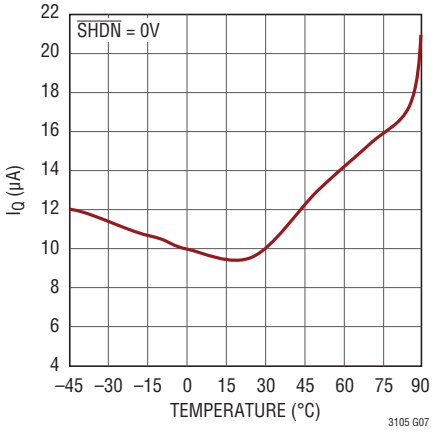

V_{IN} for Synchronous Operation

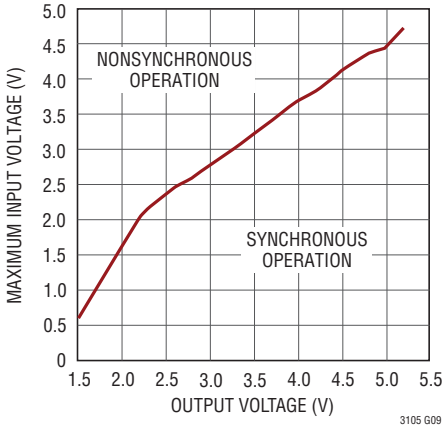

TYPICAL PERFORMANCE CHARACTERISTICS

T_A = 25°C, V_{AUX} = V_{OUT} = 3.3V, V_{LDO} = 2.2V, V_{IN} = 0.6V, unless otherwise noted.

Exiting MPPC Control on Input Voltage Step

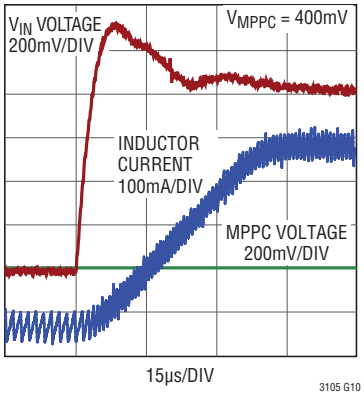

I_{PEAK} and I_{VALLEY} Current Limit Change vs Temperature

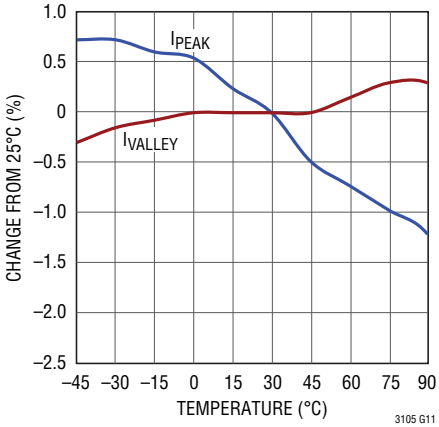

Efficiency vs V_{IN}

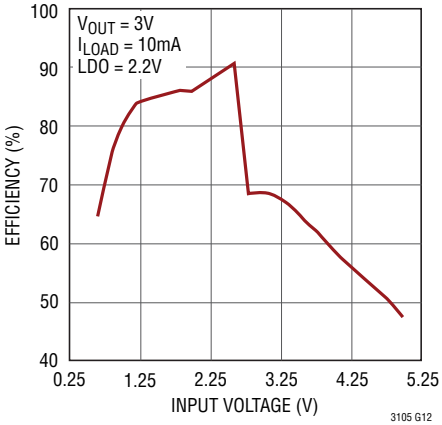

Input and Output Burst Ripple

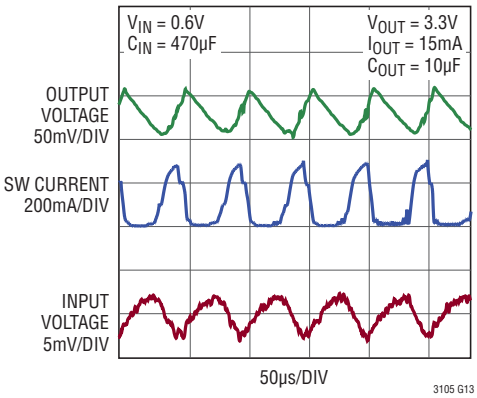

Efficiency vs Output Current and Power Loss, V_{OUT} = 3.3V

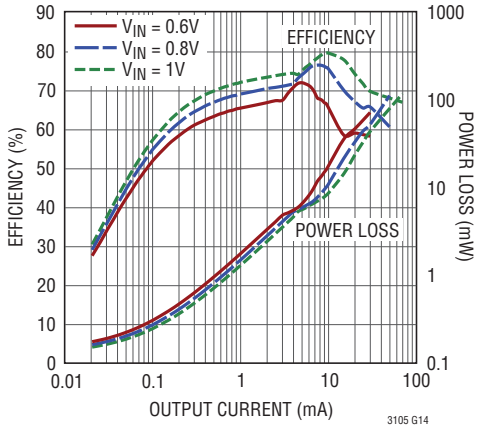

Efficiency vs Output Current and Power Loss, V_{OUT} = 5V

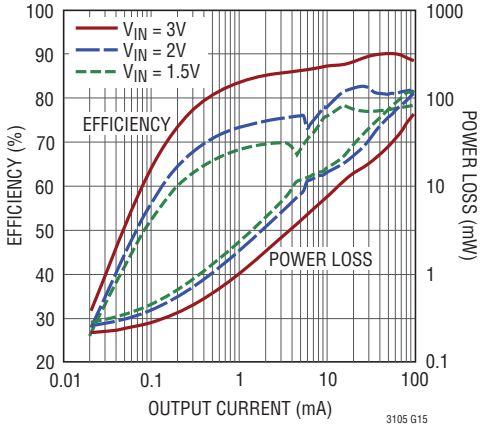

No-Load Input Current vs Input Voltage

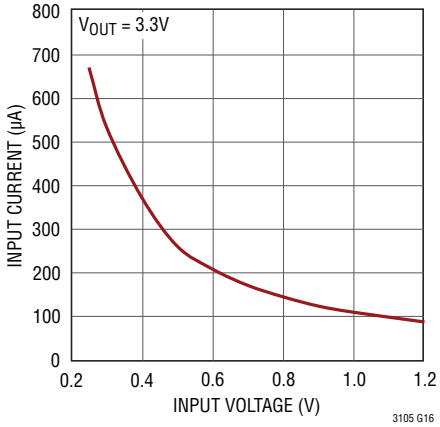

PIN FUNCTIONS (DFN/MSOP)

FB (Pin 1/Pin 1): Step-Up Converter Feedback Input. Connect the V_{OUT} resistor divider tap to this input. The output voltage can be adjusted between 1.5V and 5.25V.

LDO (Pin 2/Pin 2): LDO Regulator Output. Connect a 4.7µF or larger capacitor between LDO and GND.

FBLDO (Pin 3/Pin 3): LDO Feedback Input. Connect the LDO resistive divider tab to this input. Alternatively, connecting FBLDO directly to GND will configure the LDO output voltage to be internally set at 2.2V (nominal).

$\overline{SHDN}$ (Pin 4/Pin 4): Logic Controlled Shutdown Input. With $\overline{SHDN}$ open, the converter is enabled by an internal 2MΩ pull-up resistor. The $\overline{SHDN}$ pin should be driven with an open-drain or open-collector pull-down and floated until the converter has entered normal operation. Excessive loading on this pin may cause a failure to complete start-up.

$\overline{SHDN}$ = Low: IC Disabled

$\overline{SHDN}$ = High: IC Enabled

MPPC (Pin 5/Pin 5): Set Point Input for Maximum Power Point Control. Connect a resistor from MPPC to GND to program the activation point for the MPPC loop. To disable the MPPC circuit, connect MPPC directly to GND.

V_{IN} (Pin 6/Pin 8): Input Supply. Connect a decoupling capacitor between this pin and GND. The PCB trace length from the V_{IN} pin to the decoupling capacitor should be as short and wide as possible. When used with high impedance sources such as photovoltaic cells, this pin should have a 10µF or larger decoupling capacitor.

GND (Exposed Pad Pin 11/Pins 6, 7) : Small Signal and Power Ground for the IC. The GND connections should be soldered to the PCB ground using the lowest impedance path possible.

SW (Pin 7/Pin 9): Switch Pin. Connect an inductor between SW and V_{IN}. PCB trace lengths should be as short as possible to reduce EMI. While the converter is sleeping or is in shutdown, the internal antiringing switch connects the SW pin to the V_{IN} pin in order to minimize EMI.

PGOOD (Pin 8/Pin 10): Power Good Indicator. This is an open-drain output. The pull-down is disabled when V_{OUT} has achieved the voltage defined by the feedback divider on the FB pin. The pull-down is also disabled while the IC is in shutdown or start-up mode.

V_{OUT} (Pin 9/Pin 11): Step-Up Converter Output. This is the drain connection of the main output internal synchronous rectifier. A 10µF or larger capacitor must be connected between this pin and GND. The PCB trace length from the V_{OUT} pin to the output filter capacitor should be as short and wide as possible.

AUX (Pin 10/Pin 12): Auxiliary Voltage. Connect a 1µF capacitor between this pin and GND. This pin is used by the start-up circuitry to generate a voltage rail to power internal circuitry until the main output reaches regulation. AUX and V_{OUT} are internally connected together once V_{OUT} exceeds V_{AUX}.

BLOCK DIAGRAM (Pin Numbers for DFN Package Only)

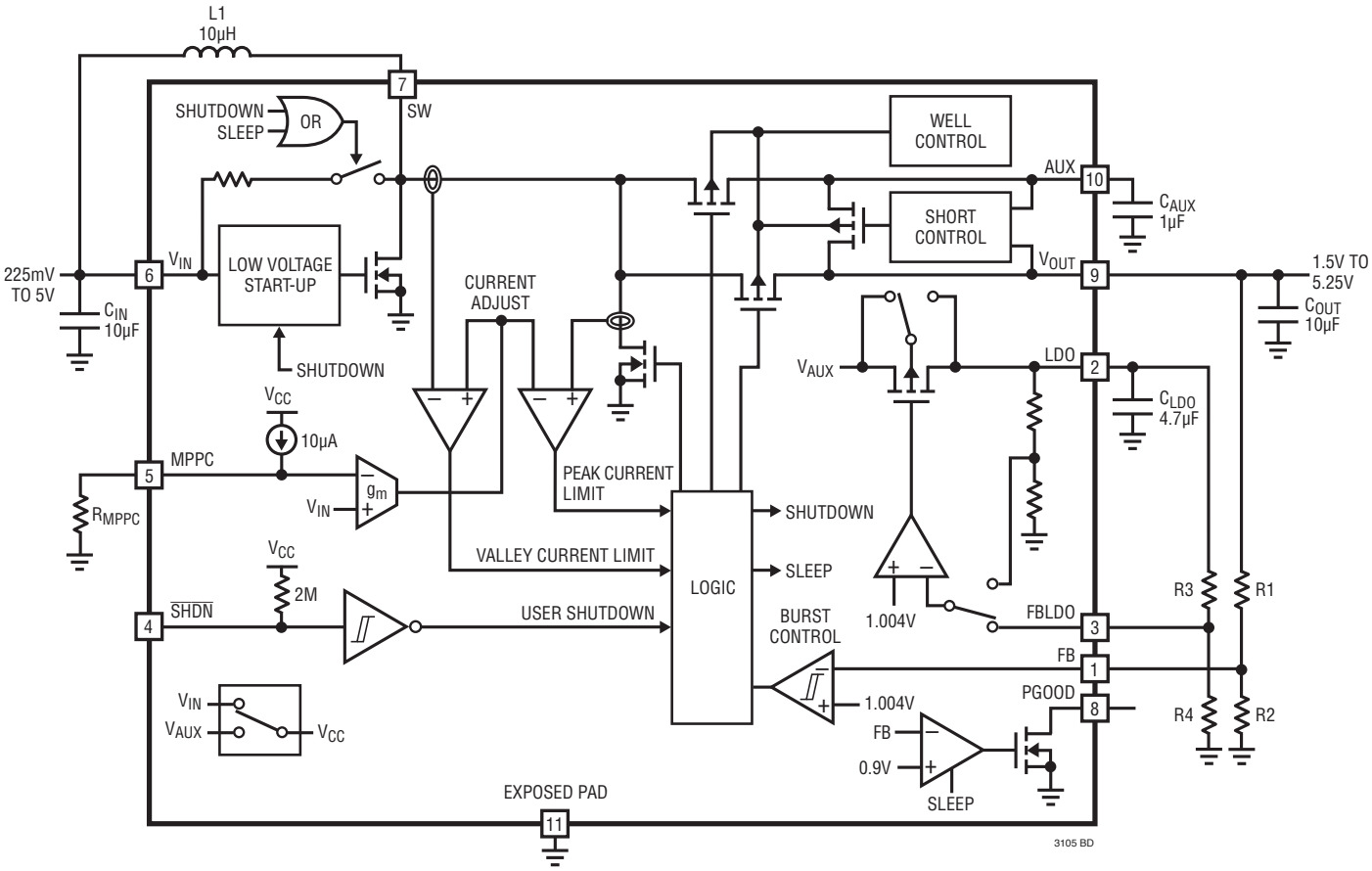

OPERATION

Introduction

The LTC3105 is a unique, high performance, synchronous boost converter that incorporates maximum power point control, 250mV start-up capability and an integrated LDO regulator. This part operates over a very wide range of input voltages from 225mV to 5V. Its Burst Mode architecture and low 24µA quiescent current optimize efficiency in low power applications.

An integrated maximum power point controller allows for operation directly from high impedance sources such as photovoltaic cells by preventing the input power source voltage from collapsing below the user programmable MPPC threshold. Peak current limits are automatically adjusted with proprietary techniques to maintain operation at levels that maximize power extraction from the source.

The 250mV start-up voltage and 225mV minimum operating voltage enable direct operation from a single photovoltaic cell and other very low voltage, high series impedance power sources such as TEGs and fuel cells.

Synchronous rectification provides high efficiency operation while eliminating the need for external Schottky diodes. The LTC3105 provides output disconnect which prevents large inrush currents during start-up. This is particularly important for high internal resistance power sources like photovoltaic cells and thermoelectric generators which can become overloaded if inrush current is not limited during start-up of the power converter. In addition, output disconnect isolates V_{OUT} from V_{IN} while in shutdown.

V_{IN} > V_{OUT} Operation

The LTC3105 includes the ability to seamlessly maintain regulation if V_{IN} becomes equal to or greater than V_{OUT}. With V_{IN} greater than or equal to V_{OUT}, the synchronous rectifiers are disabled which may result in reduced efficiency.

Shutdown Control

The $\overline{SHDN}$ pin is an active low input that places the IC into low current shutdown mode. This pin incorporates an internal 2MΩ pull-up resistor which enables the converter if the $\overline{SHDN}$ pin is not controlled by an external circuit. The $\overline{SHDN}$ pin should be allowed to float while the part is in start-up mode. Once in normal operation, the $\overline{SHDN}$ pin may be controlled using an open-drain or open-collector pull-down. Other external loads on this pin should be avoided, as they may result in the part failing to reach regulation. In shutdown, the internal switch connecting AUX and V_{OUT} is enabled.

When the $\overline{SHDN}$ pin is released, the LTC3105 is enabled and begins switching after a short delay. When either V_{IN} or V_{AUX} is above 1.4V, this delay will typically range between 20µs and 100µs. Refer to the Typical Performance Characteristics section for more details.

Start-Up Mode Operation

The LTC3105 provides the capability to start with voltages as low as 250mV. During start-up the AUX output initially is charged with the synchronous rectifiers disabled. Once V_{AUX} has reached approximately 1.4V, the converter leaves start-up mode and enters normal operation. Maximum power point control is not enabled during start-up, however, the currents are internally limited to sufficiently low levels to allow start-up from weak input sources.

While the converter is in start-up mode, the internal switch between AUX and V_{OUT} remains disabled and the LDO is disabled. Refer to Figure 1 for an example of a typical start-up sequence.

The LTC3105 is optimized for use with high impedance power sources such as photovoltaic cells. For operation from very low impedance, low input voltage sources, it may be necessary to add several hundred milliohms of series input resistance to allow for proper low voltage start-up.

Normal Operation

When either V_{IN} or V_{AUX} is greater than 1.4V typical, the converter will enter normal operation.

The converter continues charging the AUX output until the LDO output enters regulation. Once the LDO output is in regulation, the converter begins charging the V_{OUT} pin. V_{AUX} is maintained at a level sufficient to ensure the LDO remains in regulation. If V_{AUX} becomes higher than required to maintain LDO regulation, charge is transferred from the AUX output to the V_{OUT} output. If V_{AUX} falls too low, current is redirected to the AUX output instead of being used to charge the V_{OUT} output. Once V_{OUT} rises

OPERATION

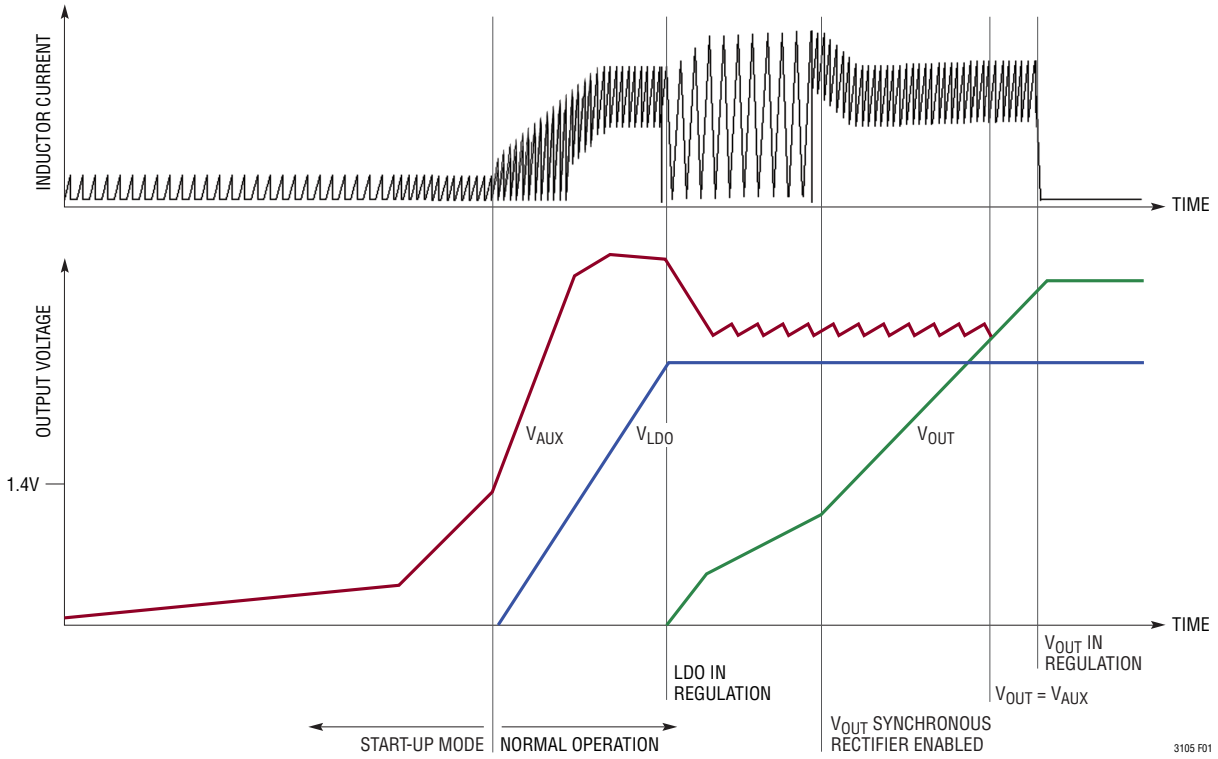

Figure 1. Typical Converter Start-Up Sequence

above V_{AUX}, an internal switch is enabled to connect the two outputs together.

If V_{IN} is greater than the voltage on the driven output (V_{OUT} or V_{AUX}), or the driven output is less than 1.2V (typical), the synchronous rectifiers are disabled. With the synchronous rectifiers disabled, the converter operates in critical conduction mode. In this mode, the N-channel MOSFET between SW and GND is enabled and remains on until the inductor current reaches the peak current limit. It is then disabled and the inductor current discharges completely before the cycle is repeated.

When the output voltage is greater than the input voltage and greater than 1.2V, the synchronous rectifier is enabled. In this mode, the N-channel MOSFET between SW and GND is enabled until the inductor current reaches the peak current limit. Once current limit is reached, the N-channel MOSFET turns off and the P-channel MOSFET between SW and the driven output is enabled. This switch remains on until the inductor current drops below the valley current limit and the cycle is repeated.

When V_{OUT} reaches the regulation point, the N- and P-channel MOSFETs connected to the SW pin are disabled and the converter enters sleep.

Auxiliary LDO

The integrated LDO provides a regulated 6mA rail to power microcontrollers and external sensors. When the input voltage is above the minimum of 225mV, the LDO is powered from the AUX output allowing the LDO to attain regulation while the main output is still charging. The LDO has a 12mA current limit and an internal 1ms soft-start to eliminate inrush currents. The LDO output voltage is set by the FBLDO pin. If a resistor divider is connected to this pin, the ratio of the resistors determines the LDO output voltage. If the FBLDO pin is connected directly to GND, the LDO will use a 2MΩ internal divider network to program a 2.2V nominal output voltage. The LDO should be programmed for an output voltage less than the programmed V_{OUT}.

OPERATION

When the converter is placed in shutdown mode, the LDO is forced into reverse-blocking mode with reverse current limited to under 1µA. After the shutdown event has ended, the LDO remains in reverse-blocking mode until V_{AUX} has risen above the LDO voltage.

MPPC Operation

The maximum power point control circuit allows the user to set the optimal input voltage operating point for a given power source. The MPPC circuit dynamically regulates the average inductor current to prevent the input voltage from dropping below the MPPC threshold. When V_{IN} is greater than the MPPC voltage, the inductor current is increased until V_{IN} is pulled down to the MPPC set point. If V_{IN} is less than the MPPC voltage, the inductor current is reduced until V_{IN} rises to the MPPC set point.

Automatic Power Adjust

The LTC3105 incorporates a feature that maximizes efficiency at light load while providing increased power capability at heavy load by adjusting the peak and valley of the inductor current as a function of load. Lowering the peak inductor current to 100mA at light load optimizes efficiency by reducing conduction losses. As the load increases, the peak inductor current is automatically increased to a maximum of 500mA. At intermediate loads, the peak inductor current can vary between 100mA to 500mA. This function is overridden by the MPPC function and will only be observed when the power source can deliver more power than the load requires.

PGOOD Operation

The power good output is used to indicate that V_{OUT} is in regulation. PGOOD is an open-drain output, and is disabled in shutdown. PGOOD will indicate that power is good at the beginning of the first sleep event after the output voltage has risen above 90% of its regulation value. PGOOD remains asserted until V_{OUT} drops below 90% of its regulation value at which point PGOOD will pull low.

APPLICATIONS INFORMATION

Component Selection

Low DCR power inductors with values between 4.7µH and 30µH are suitable for use with the LTC3105. For most applications, a 10µH inductor is recommended. In applications where the input voltage is very low, a larger value inductor can provide higher efficiency and a lower start-up voltage. In applications where the input voltage is relatively high (V_{IN} > 0.8V), smaller inductors may be used to provide a smaller overall footprint. In all cases, the inductor must have low DCR and sufficient saturation current rating. If the DC resistance of the inductor is too high, efficiency will be reduced and the minimum operating voltage will increase.

Input capacitor selection is highly important in low voltage, high source resistance systems. For general applications, a 10µF ceramic capacitor is recommended between V_{IN} and GND. For high impedance sources, the input capacitor should be large enough to allow the converter to complete start-up mode using the energy stored in the input capacitor. When using bulk input capacitors that have high ESR, a small valued parallel ceramic capacitor should be placed between V_{IN} and GND as close to the converter pins as possible.

A 1µF ceramic capacitor should be connected between AUX and GND. Larger capacitors should be avoided to minimize start-up time. A low ESR output capacitor should be connected between V_{OUT} and GND. The main output capacitor should be 10µF or larger. The main output can also be used to charge energy storage devices including tantalum capacitors, supercapacitors and batteries. When using output bulk storage devices with high ESR, a small valued ceramic capacitor should be placed in parallel and located as close to the converter pins as possible.

APPLICATIONS INFORMATION

Step-Up Converter Feedback Configuration

A resistor divider connected between the V_{OUT} and FB pins programs the step-up converter output voltage, as shown in Figure 2. An optional 22pF feedforward capacitor, C_{FF1}, can be used to reduce output ripple and improve load transient response. The equation for V_{OUT} is:

$$V_{OUT} = 1.004V \bullet \left(\frac{R1}{R2} + 1\right)$$

LDO Regulator Feedback Configuration

Two methods can be used to program the LDO output voltage, as shown in Figure 3. A resistor divider connected between the LDO and FBLDO pins can be used to program the LDO output voltage. The equation for the LDO output voltage is:

$$V_{LDO} = 1.004V \bullet \left(\frac{R3}{R4} + 1\right)$$

Alternatively, the FBLDO pin can be connected directly to GND. In this configuration, the LDO is internally set to a nominal 2.2V output.

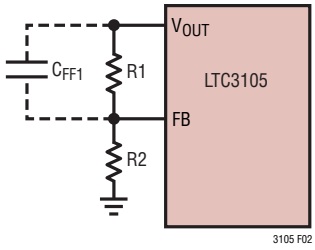

Figure 2. FB Configuration

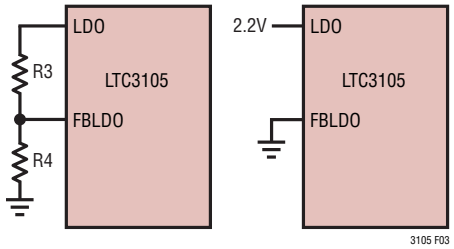

Figure 3. FBLDO Configuration

MPPC Threshold Configuration

The MPPC circuit controls the inductor current to maintain V_{IN} at the voltage on the MPPC pin. The MPPC pin voltage is set by connecting a resistor between the MPPC pin and GND, as shown in Figure 4. The MPPC voltage is determined by the equation:

$$V_{MPPC} = 10\mu A \bullet R_{MPPC}$$

In photovoltaic cell applications, a diode can be used to set the MPPC threshold so that it tracks the cell voltage over temperature, as shown in Figure 5. The diode should be thermally coupled to the photovoltaic cell to ensure proper tracking. A resistor placed in series with the diode can be used to adjust the DC set point to better match the maximum power point of a particular source if the selected diode forward voltage is too low. If the diode is located far from the converter inputs, a capacitor may be required to filter noise that may couple onto the MPPC pin, as shown in Figure 5. This method can be extended to stacked cell sources through use of multiple series connected diodes.

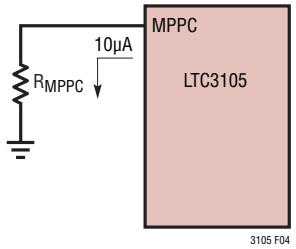

Figure 4. MPPC Configuration

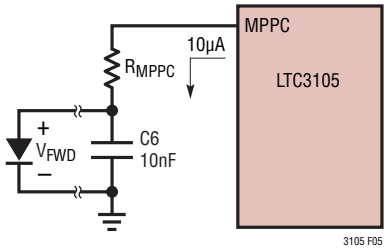

Figure 5. MPPC Configuration with Temperature Adjustment

APPLICATIONS INFORMATION

Industrial Current Loops

The low 250mV start-up and low voltage operation of the LTC3105 allow it to be supplied by power from a diode placed in an industrial sensor current loop, as shown in Figure 6. In this application, a large input capacitor is required due to the very low available supply current (less than 4mA). The loop diode should be selected for a minimum forward drop of 300mV. The MPPC pin voltage should be set for a value approximately 50mV below the minimum diode forward voltage.

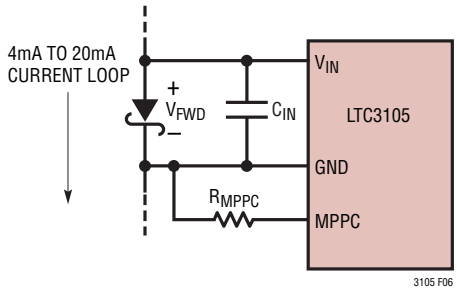

Figure 6. Current Loop Power Tap

TYPICAL APPLICATIONS

3.3V from a Single-Cell Photovoltaic Source with Temperature Tracking

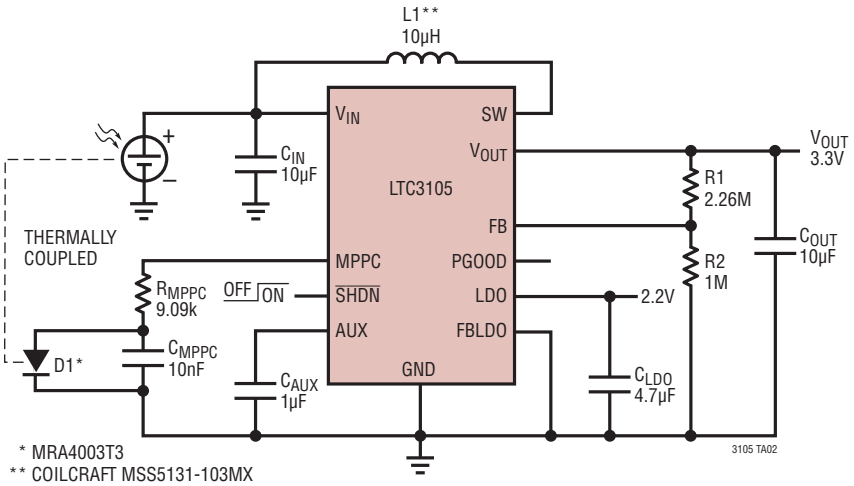

V_{MPPC} vs Temperature

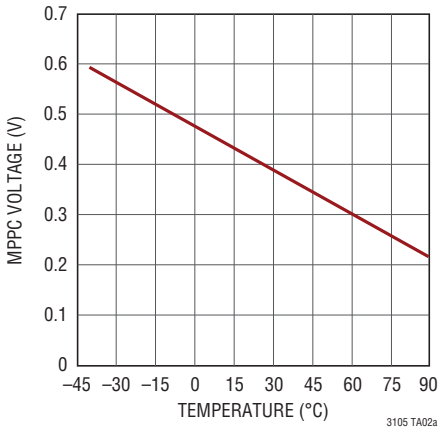

MPPC Response to Input Source Current Step

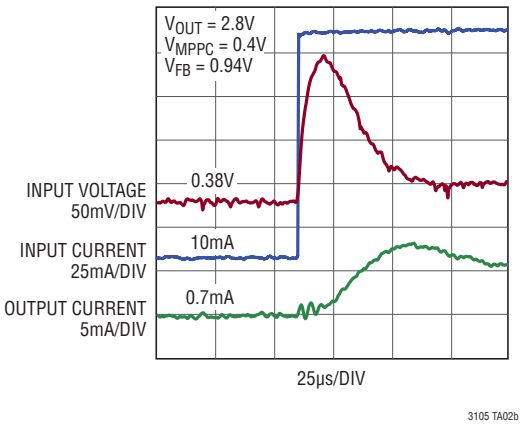

TYPICAL APPLICATIONS

3.3V from Multiple Stacked-Cell Photovoltaic with Source Temperature Tracking

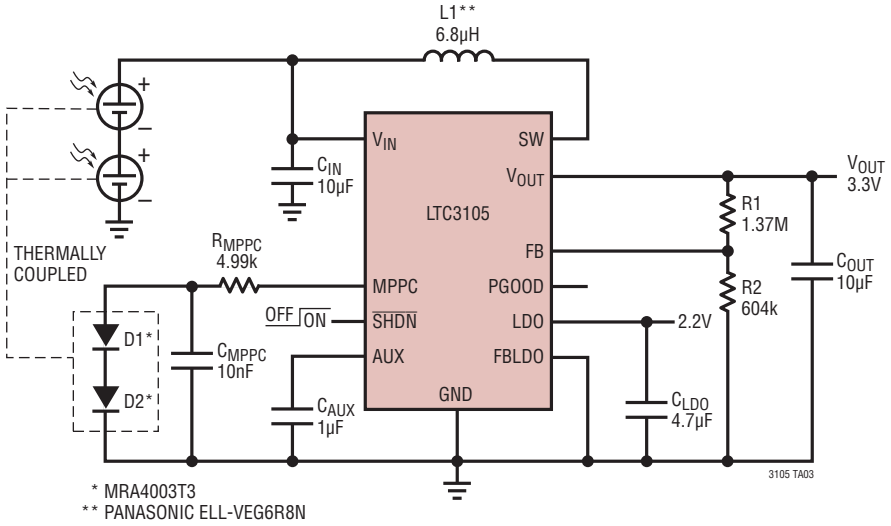

Thermoelectric Generator to 2.4V Super Capacitor Charger

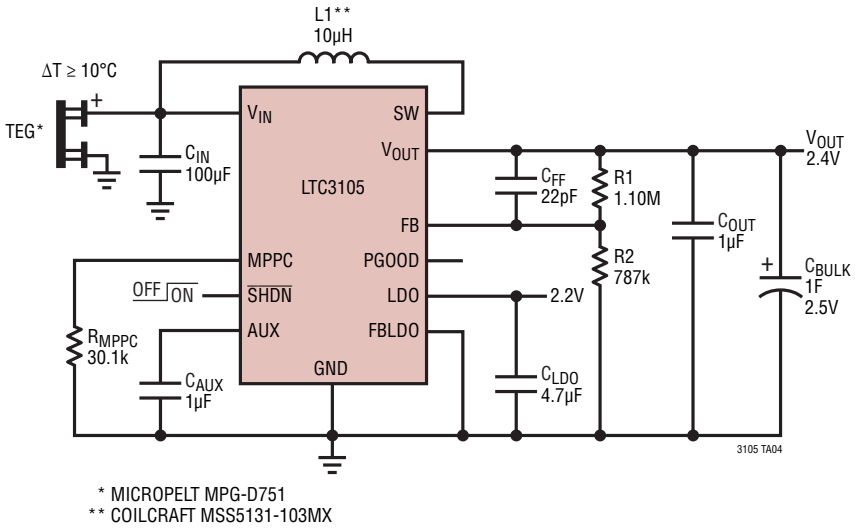

TYPICAL APPLICATIONS

Industrial Sensor 4mA to 20mA Current Loop Power Tap

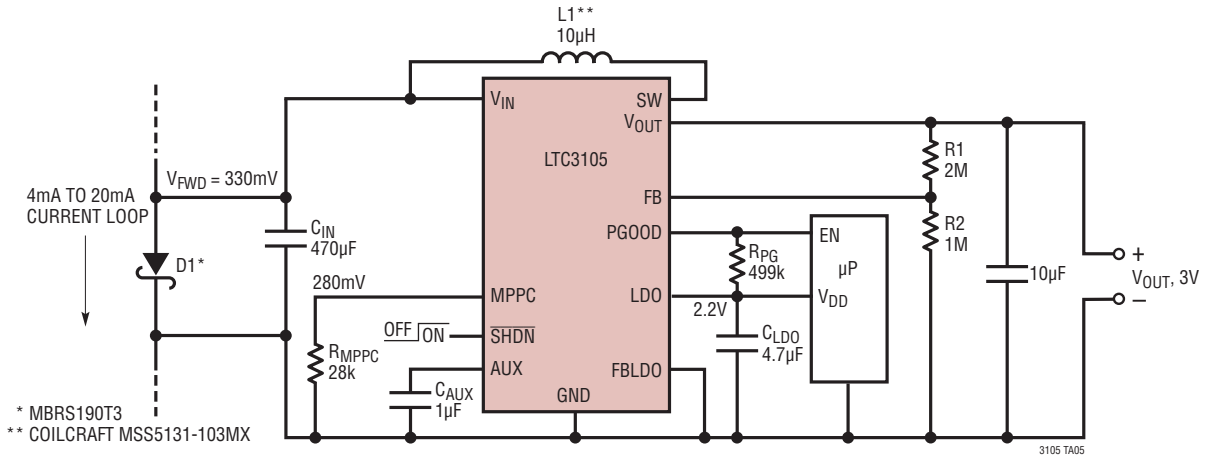

Transient Response to Load Pulse with 4mA Loop Current

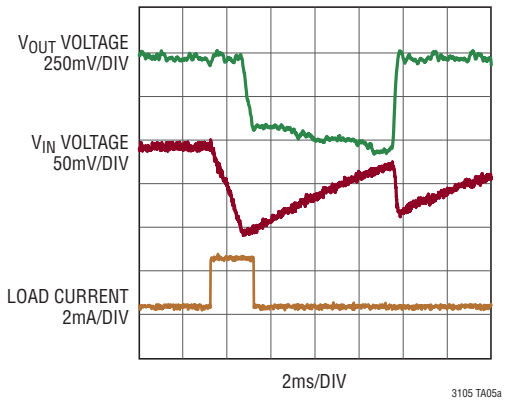

Start-Up V_{IN}, V_{OUT}, V_{LDO}

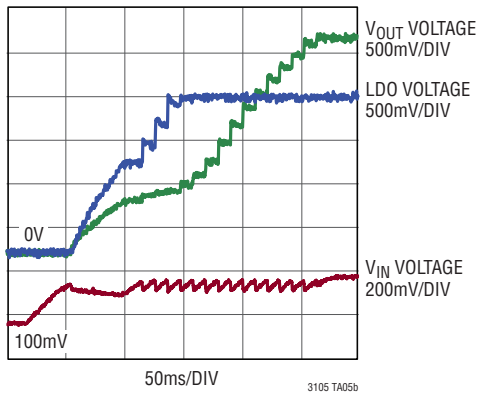

Single-Cell Photovoltaic NiMH Trickle Charger

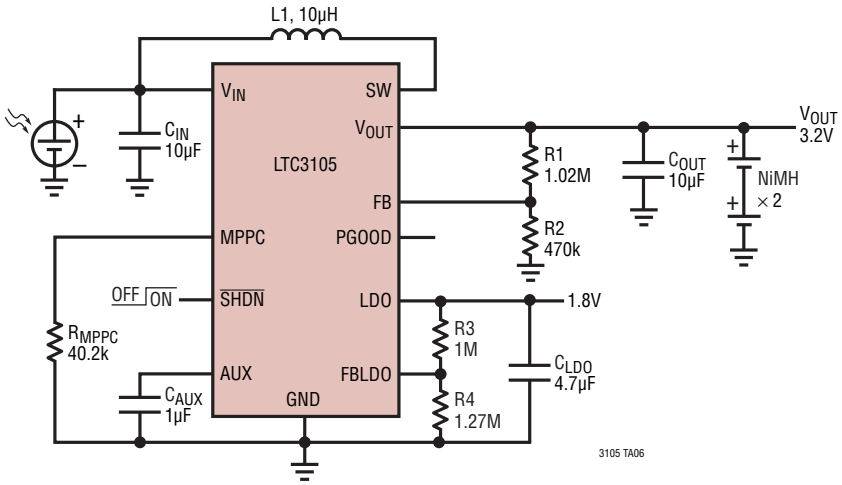

PACKAGE DESCRIPTION

DD Package
10-Lead Plastic DFN (3mm × 3mm)
(Reference LTC DWG # 05-08-1699 Rev C)

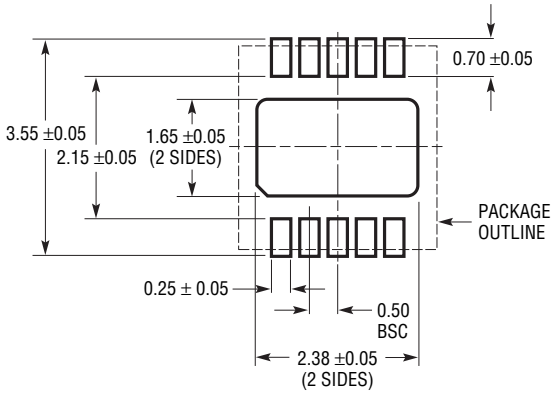

RECOMMENDED SOLDER PAD PITCH AND DIMENSIONS

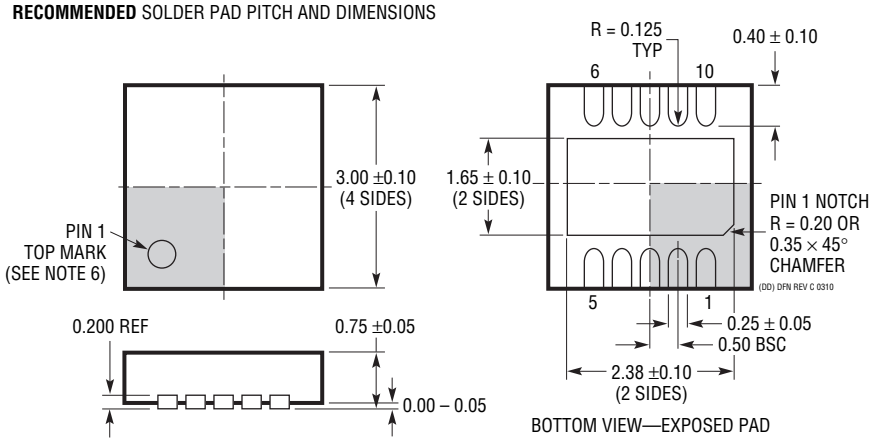

BOTTOM VIEW—EXPOSED PAD

NOTE:
1. DRAWING TO BE MADE A JEDEC PACKAGE OUTLINE M0-229 VARIATION OF (WEED-2).
   CHECK THE LTC WEBSITE DATA SHEET FOR CURRENT STATUS OF VARIATION ASSIGNMENT
2. DRAWING NOT TO SCALE
3. ALL DIMENSIONS ARE IN MILLIMETERS
4. DIMENSIONS OF EXPOSED PAD ON BOTTOM OF PACKAGE DO NOT INCLUDE
   MOLD FLASH. MOLD FLASH, IF PRESENT, SHALL NOT EXCEED 0.15mm ON ANY SIDE
5. EXPOSED PAD SHALL BE SOLDER PLATED
6. SHADED AREA IS ONLY A REFERENCE FOR PIN 1 LOCATION ON THE
   TOP AND BOTTOM OF PACKAGE

PACKAGE DESCRIPTION

MS Package
12-Lead Plastic MSOP
(Reference LTC DWG # 05-08-1668 Rev Ø)

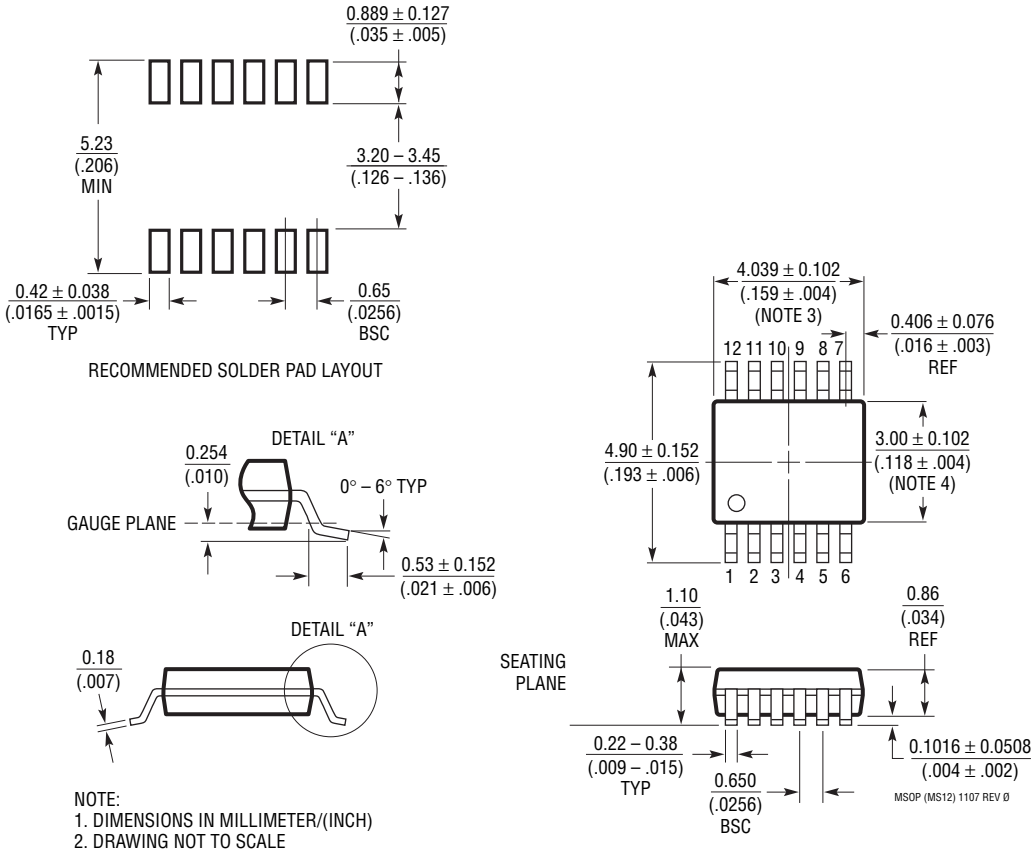

NOTE:
1. DIMENSIONS IN MILLIMETER/(INCH)
2. DRAWING NOT TO SCALE
3. DIMENSION DOES NOT INCLUDE MOLD FLASH, PROTRUSIONS OR GATE BURRS.
   MOLD FLASH, PROTRUSIONS OR GATE BURRS SHALL NOT EXCEED 0.152mm (.006") PER SIDE
4. DIMENSION DOES NOT INCLUDE INTERLEAD FLASH OR PROTRUSIONS.
   INTERLEAD FLASH OR PROTRUSIONS SHALL NOT EXCEED 0.152mm (.006") PER SIDE
5. LEAD COPLANARITY (BOTTOM OF LEADS AFTER FORMING) SHALL BE 0.102mm (.004") MAX

REVISION HISTORY

REV	DATE	DESCRIPTION	PAGE NUMBER
A	02/11	Added (Note 5) notation to Input Start-Up Voltage conditions	3
		Added Note 5	3
		Updated Start-Up Mode Operation section	8

Information furnished by Linear Technology Corporation is believed to be accurate and reliable. However, no responsibility is assumed for its use. Linear Technology Corporation makes no representation that the interconnection of its circuits as described herein will not infringe on existing patent rights.

TYPICAL APPLICATION

Single-Cell Powered Remote Wireless Sensor

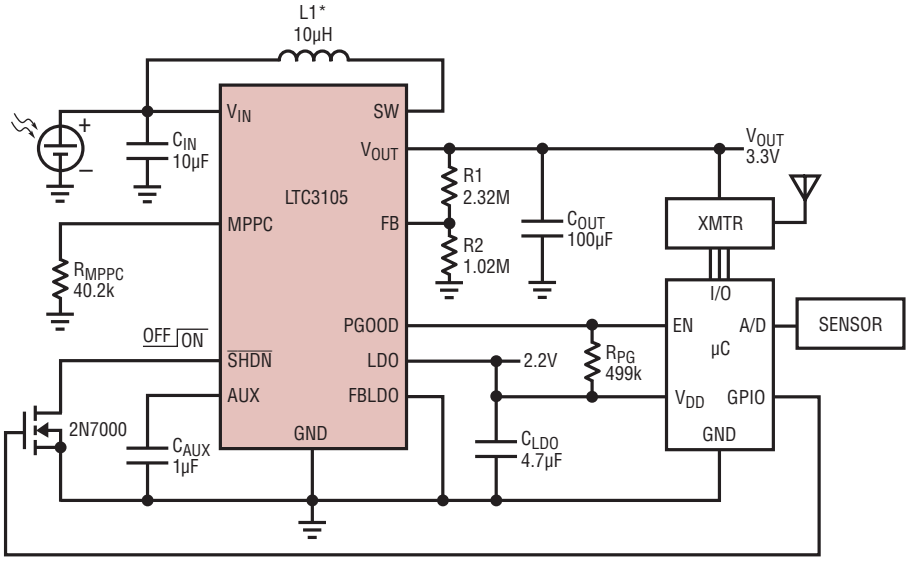

RELATED PARTS

PART NUMBER	DESCRIPTION	COMMENTS
LTC3108/LTC3108-1	Ultralow Voltage Step-Up Converter and Power Manager	V_{IN}: 0.02V to 1V; V_{OUT} = 2.2V, 2.35V, 3.3V, 4.1V, 5V; I_Q = 6µA; 4mm × 3mm DFN-12, SSOP-16 Packages; LTC3108-1 V_{OUT} = 2.2V, 2.5V, 3V, 3.7V, 4.5V
LTC3109	Auto-Polarity, Ultralow Voltage Step-Up Converter and Power Manager	$\|V_{IN}\|$: 0.03V to 1V; V_{OUT} = 2.2V, 2.35V, 3.3V, 4.1V, 5V; I_Q = 7µA; 4mm × 4mm QFN-20, SSOP-20 Packages
LTC4070	Li-Ion/Polymer Shunt Battery Charger System	450nA I_Q; 1% Float Voltage Accuracy; 50mA Shunt Current 4.0V/4.1V/4.2V
LTC4071	Li-Ion/Polymer Shunt Battery Charger System with Low Battery Disconnect	550nA I_Q; 1% Float Voltage Accuracy; <10nA Low Battery Disconnect; 4.0V/4.1V/4.2V; 8-Lead 2mm × 3mm DFN and MSOP Packages
LTC3588-1/LTC3588-2	Piezoelectric Energy Harvesting Power Supply	< 1µA I_Q in Regulation; 2.7V to 20V Input Range; Integrated Bridge Rectifier
LTC3388-1/LTC3388-3	20V High Efficiency Nanopower Step-Down Regulator	860nA I_Q in Sleep; 2.7V to 20V Input; V_{OUT}: 1.2V to 5V; Enable and Standby Pins
LTC3225/LTC3225-1	150mA Super Capacitor Charger	Programmable Charge Current Up to 150mA; Constant-Frequency Charging of Two Series Supercapacitors; No Inductors; 2mm × 3mm DFN Package
LTC3525-3/LTC3525-3.3/ LTC3525-5/LTC3525L-3	400mA Micropower Synchronous Step-Up DC/DC Converter with Output Disconnect	95% Efficiency; V_{IN}: 1V to 4.5V; V_{OUT} = 3V, 3.3V or 5V; I_Q = 7µA; I_{SD} < 1µA; SC70 Package; LTC3525L-3 V_{IN}: 0.7V to 4.5V
LTC3526L/LTC3526L-2/ LTC3526LB/LTC3526LB-2	550mA, 1MHz/2MHz Synchronous Boost Converter	95% Efficiency; V_{IN}: 0.7V to 5.5V; $V_{OUT(MAX)}$ = 5.25V; I_Q = 9µA; I_{SD} < 1µA; 2mm × 2mm DFN Package
LTC3527	Dual 2.2MHz 800mA/400mA Synchronous Step-Up DC/DC Converters	V_{IN}: 0.5V to 5V; V_{OUT}: 1.6V to 5.25V; I_Q = 12µA; I_{SD} < 1µA; 3mm × 3mm QFN Package
LTC3528/LTC3528-2/ LTC3528B/LTC3528B-2	1A (I_{SW}), 1MHz/2MHz Synchronous Step-Up DC/DC Converter with Output Disconnect	94% Efficiency; V_{IN}: 0.7V to 5.5V; $V_{OUT(MAX)}$ = 5.25V; I_Q = 12µA; I_{SD} < 1µA; 2mm × 3mm DFN-8 Package
LTC3537	2.2MHz, 600mA Synchronous Step-Up DC/DC Converter and 100mA LDO	V_{IN}: 0.68V to 5V; V_{OUT}: 1.5V to 5.25V; 3mm × 3mm QFN Package
LTC3539/LTC3539-2	2A (I_{SW}), 1MHz/2MHz Synchronous Step-Up DC/DC Converter with Output Disconnect	94% Efficiency; V_{IN}: 0.7V to 5V; $V_{OUT(MAX)}$ = 5.25V; I_Q = 10µA; I_{SD} < 1µA; 2mm × 3mm DFN Package

Linear Technology Corporation
1630 McCarthy Blvd., Milpitas, CA 95035-7417
(408) 432-1900 • FAX: (408) 434-0507 • www.linear.com
LT 0211 REV A • PRINTED IN USA
© LINEAR TECHNOLOGY CORPORATION 2010