1.5A, 1.5MHz Step-Up DC/DC Converter in 2mm × 3mm DFN

FEATURES

- **Compact Solution for 5V USB On-The-Go V_{BUS} Power**
- **5V at 500mA from Single Li-Ion Cell**
- **Automatic Fault Detection**
- **High Efficiency: Up to 95%**
- **V_{IN} Range: 1.8V to 5.25V**
- **Fixed 5V Output**
- **Short-Circuit Protection**
- **1.5MHz Low Noise, Fixed Frequency PWM**
- Inrush Current Limiting and Internal Soft-Start
- Output Disconnect
- <1µA Quiescent Current in Shutdown
- $V_{IN} > V_{OUT}$ Operation
- 8-Lead, 2mm × 3mm DFN Package

APPLICATIONS

- Personal Media Players
- Digital Video Cameras
- Digital Multimedia Broadcast Tuners
- Digital Cameras
- Smart Phones

DESCRIPTION

The LTC®3529 is a 5V output, synchronous, fixed frequency step-up DC/DC converter optimized for USB On-The-Go (OTG) hosting applications. This compact USB OTG 5V V_{BUS} converter features a 1.5MHz switching frequency, internal compensation and a tiny 2mm × 3mm DFN package. The LTC3529 can operate from input voltages as low as 1.8V.

USB OTG-specific features include a fault flag with 22ms deglitching to indicate when the bus is overloaded, output disconnect and short-circuit protection. Following a fault, the LTC3529 can be programmed to either latchoff or restart after a time-out duration.

Additional features include a <1µA shutdown mode, soft-start, inrush current limiting and thermal overload protection. Anti-ring circuitry reduces EMI during low power operation. The LTC3529 is offered in an 8-lead 2mm × 3mm × 0.75mm DFN package.

, LT, LTC, LTM, Linear Technology and the Linear logo are registered trademarks of Linear Technology Corporation. All other trademarks are the property of their respective owners. Protected by U.S. Patents including 6404251, 6166527.

TYPICAL APPLICATION

Li-Ion Battery to 5V Synchronous Boost Converter

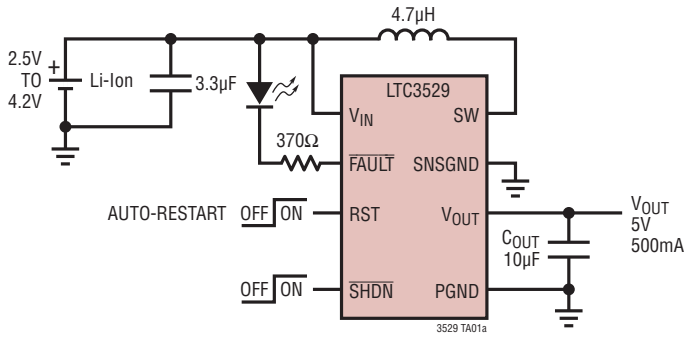

Efficiency vs Load Current

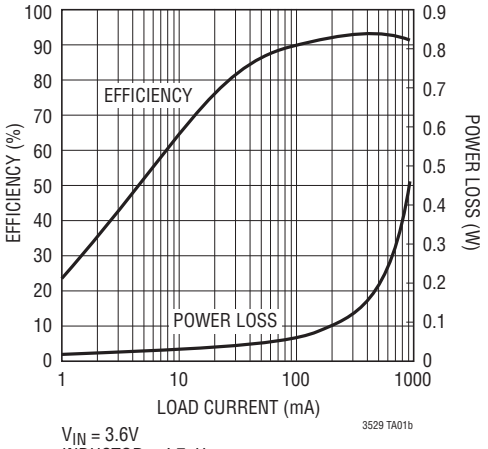

V_{IN} = 3.6V
INDUCTOR = 4.7µH,
COOPER BUSSMANN SD25-4R7

ABSOLUTE MAXIMUM RATINGS

(Note 1)

V_{IN}, V_{OUT} Voltage ..... –0.3 to 6V
$\overline{SHDN}$, RST, $\overline{FAULT}$ Voltage ..... –0.3 to 6V
SW Voltage
DC ..... –0.3 to 6V
Pulsed <100ns .....–1V to 7V
Operating Temperature Range (Note 2) ...–40°C to 85°C
Maximum Junction Temperature (Note 3) ..... 125°C
Storage Temperature Range .....–65°C to 125°C

PIN CONFIGURATION

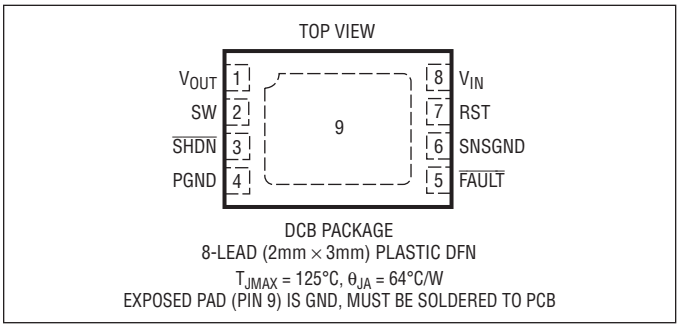

ORDER INFORMATION

LEAD FREE FINISH	TAPE AND REEL	PART MARKING	PACKAGE DESCRIPTION	TEMPERATURE RANGE
LTC3529EDCB#PBF	LTC3529EDCB#TRPBF	LCTZ	8-Lead (2mm × 3mm) Plastic DFN	–40°C to 85°C

Consult LTC Marketing for parts specified with wider operating temperature ranges.
Consult LTC Marketing for information on non-standard lead based finish parts.

For more information on lead free part marking, go to: http://www.linear.com/leadfree/
For more information on tape and reel specifications, go to: http://www.linear.com/tapeandreel/

ELECTRICAL CHARACTERISTICS

The ● denotes the specifications which apply over the full operating temperature range, otherwise specifications are at T_A = 25°C. V_{IN} = 3.6V, V_{OUT} = 5V unless otherwise noted.

PARAMETER	CONDITIONS		MIN	TYP	MAX	UNITS
Input Voltage Range			1.8		5.25	V
Output Voltage		●	4.85	5	5.15	V
Quiescent Current - Shutdown	$V_{\overline{SHDN}}$ = 0V, V_{OUT} = 0V			0.01	1	µA
NMOS Switch Leakage Current	V_{IN} = V_{SW} = 5V	●		0.3	15	µA
PMOS Switch Leakage Current	V_{SW} = 0V, V_{OUT} = 5V	●		0.3	15	µA
NMOS Switch On Resistance				0.09		Ω
PMOS Switch On Resistance				0.12		Ω
NMOS Current Limit	V_{OUT} = 4.5V (Note 4)	●	1.5			A
Current Limit Delay Time to Output	(Note 5)			40		ns
Maximum Duty Cycle	V_{OUT} = 4.5V	●	80	87		%
Minimum Duty Cycle	V_{OUT} = 5.5V	●			0	%
Switching Frequency	V_{OUT} = 4.5V	●	1.2	1.5	1.8	MHz
$\overline{SHDN}$, RST Input High Voltage		●	1			V
$\overline{SHDN}$, RST Input Low Voltage		●			0.35	V
$\overline{SHDN}$, RST Input Current	$V_{\overline{SHDN}}$, V_{OUT}, V_{RST} = 5.5V	●		0.01	1	µA
Soft-Start Time				2		ms
Line Regulation	V_{IN} = 1.8V to 5.25V			0.03		%/V

ELECTRICAL CHARACTERISTICS

The ● denotes the specifications which apply over the full operating temperature range, otherwise specifications are at T_A = 25°C. V_{IN} = 3.6V, V_{OUT} = 5V unless otherwise noted.

PARAMETER	CONDITIONS		MIN	TYP	MAX	UNITS
$\overline{FAULT}$ Delay Time	V_{OUT} = 0V		12	22	35	ms
$\overline{FAULT}$ Output Low Voltage	$I_{\overline{FAULT}}$ = 5mA, V_{OUT} = 0V			60		mV
$\overline{FAULT}$ Leakage Current	$V_{\overline{FAULT}}$ = 5.5V				10	µA

Note 1: Stresses beyond those listed under Absolute Maximum Ratings may cause permanent damage to the device. Exposure to any Absolute Maximum Rating condition for extended periods may affect device reliability and lifetime.

Note 2: The LTC3529 is guaranteed to meet performance specifications from 0°C to 85°C. Specifications over the –40°C to 85°C operating temperature range are assured by design, characterization and correlation with statistical process controls.

Note 3: This IC includes overtemperature protection that is intended to protect the device during momentary overload conditions. Junction temperature will exceed 125°C when overtemperature protection is active. Continuous operation above the specified maximum operating junction temperature may impair device reliability.

Note 4: Current measurements are performed when the LTC3529 is not switching. The current limit values in operation will be somewhat higher due to the propagation delay of the comparators.

Note 5: Specification is guaranteed by design and not 100% tested in production.

TYPICAL PERFORMANCE CHARACTERISTICS

2 Alkaline Cells to 5V Efficiency

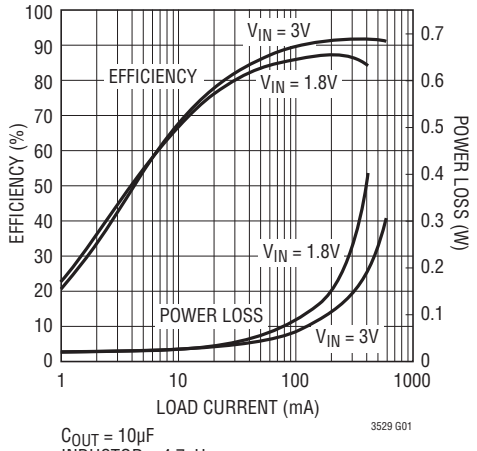

C_{OUT} = 10µF
INDUCTOR = 4.7µH,
COOPER BUSSMANN SD25-4R7

Li-Ion Battery to 5V Efficiency

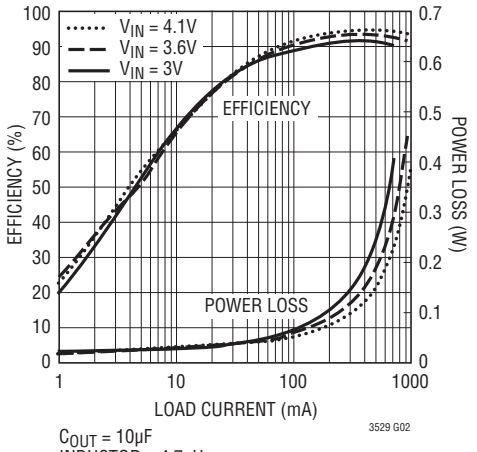

C_{OUT} = 10µF
INDUCTOR = 4.7µH,
COOPER BUSSMANN SD25-4R7

Soft-Start Waveforms

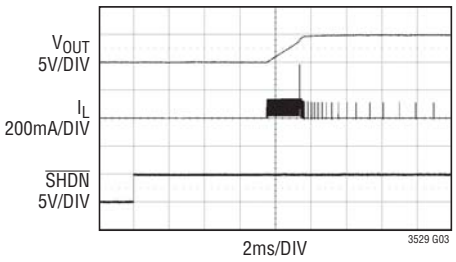

V_{IN} = 3.6V
V_{OUT} = 5V
C_{OUT} = 10µF
L = 2.2µH

Load Transient Response

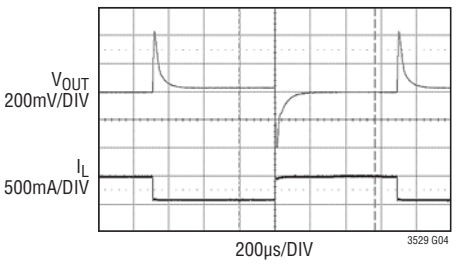

V_{IN} = 3.6V
V_{OUT} = 5V
C_{OUT} = 10µF
L = 2.2µH

V_{OUT} Ripple

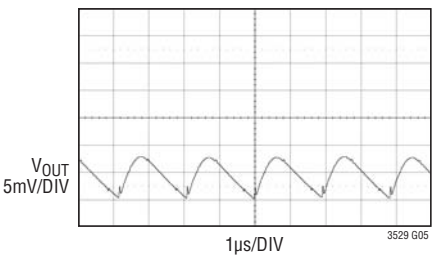

V_{IN} = 3.6V
C_{OUT} = 10µF
L = 4.7µH
I_{LOAD} = 200mA

TYPICAL PERFORMANCE CHARACTERISTICS

Current Limit vs Temperature

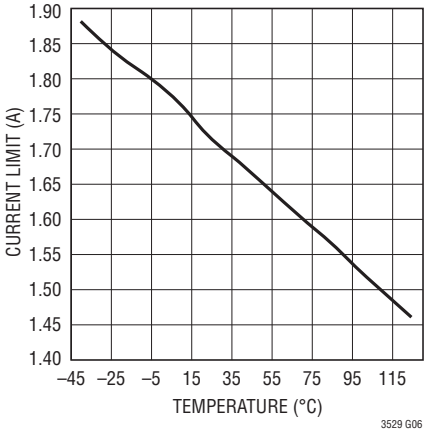

Output Voltage Change vs Temperature

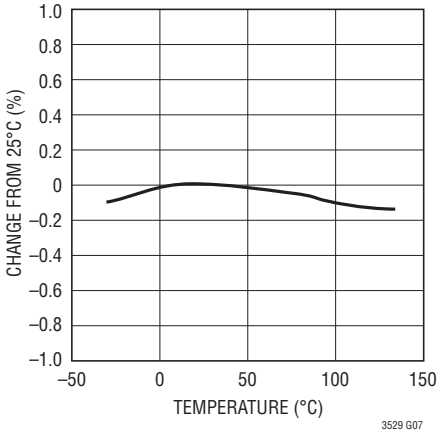

Maximum Output Current vs V_{IN}

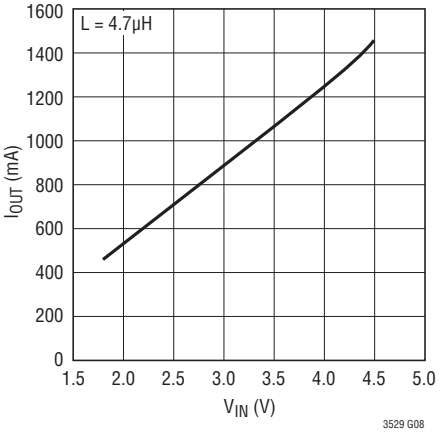

SW Pin Anti-Ringing

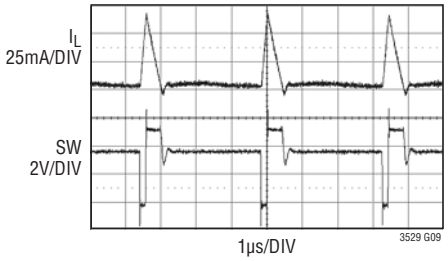

V_{IN} = 3.6V
C_{OUT} = 10µF
L = 4.7µH

Switching Frequency Variation vs Temperature

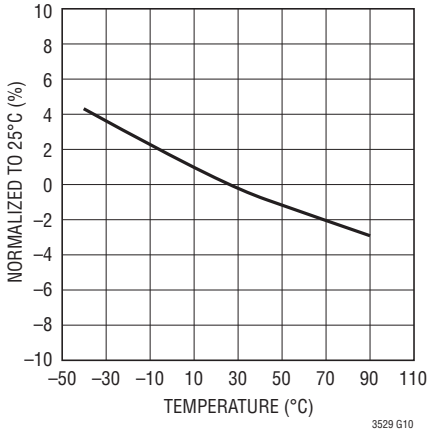

No-Load Input Current vs V_{IN}

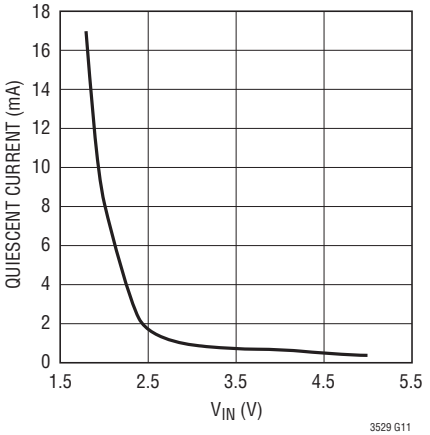

$R_{DS(ON)}$ vs Temperature

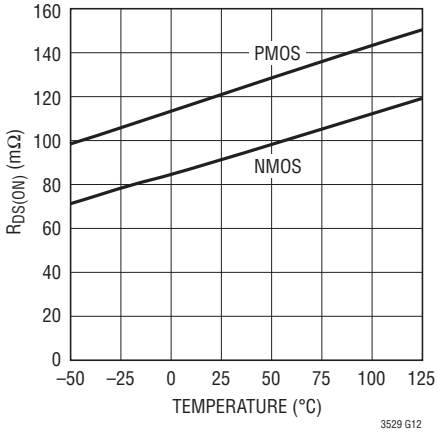

Load Regulation

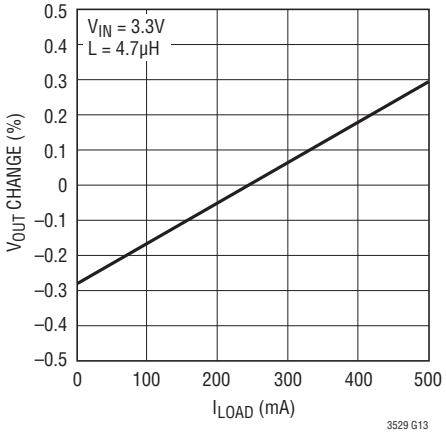

PIN FUNCTIONS

V_{OUT} (Pin 1): Converter Output, Voltage Sense Input and Drain of the Internal Synchronous Rectifier MOSFET. Driver bias is derived from V_{OUT}. PCB trace length from V_{OUT} to the output filter capacitor(s) should be as short and wide as possible.

SW (Pin 2): Switch Node. This node connects to one side of the inductor. Keep PCB traces as short and wide as possible to reduce EMI and voltage overshoot. If the inductor current falls to zero, or $\overline{SHDN}$ is low, an internal 100Ω anti-ringing switch is connected between SW and V_{IN} to minimize EMI.

$\overline{SHDN}$ (Pin 3): Active-Low Shutdown Input. Forcing this pin above 1V enables the converter. Forcing this pin below 0.35V disables the converter. Do not float this pin.

PGND (Pin 4): High Current Ground Connection. The PCB trace connecting this pin to ground should be as short and as wide as possible.

$\overline{FAULT}$ (Pin 5): Open-Drain Fault Indicator Output. Pulls low when an overcurrent condition exists for more than 22ms.

SNSGND (Pin 6): This pin must be connected to ground.

RST (Pin 7): Logic Input to Select Automatic Restart or Latchoff Following a Fault Shutdown.

- RST = High: Auto-reset mode. In this mode, the LTC3529 will automatically attempt to restart 22ms (typically) after a fault shutdown.
- RST = Low: Latchoff mode. In this mode, the LTC3529 will latch off for a fault shutdown. The IC will not restart until the $\overline{SHDN}$ pin is toggled or the supply voltage is cycled.

V_{IN} (Pin 8): Input Supply Pin.

Exposed Pad (Pin 9): Small Signal Ground. This is the ground reference for the internal circuitry of the LTC3529 and must be connected directly to ground.

BLOCK DIAGRAM

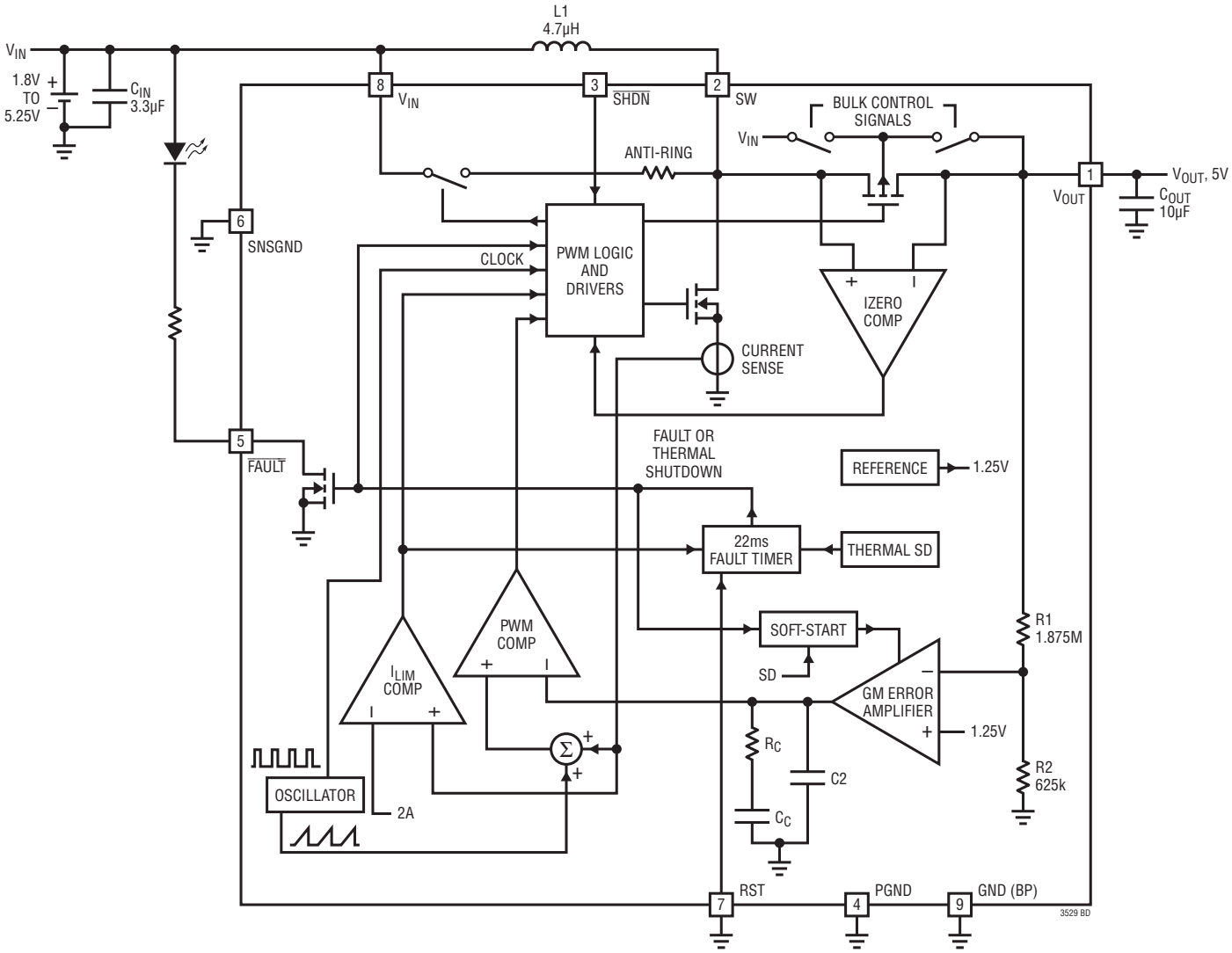

OPERATION

The LTC3529 is a 1.5MHz synchronous boost converter in an 8-lead 2mm × 3mm DFN package. The device operates with an input voltage as low as 1.8V and features fixed-frequency current-mode PWM control for exceptional line and load regulation. Internal MOSFET switches with low $R_{DS(ON)}$ and low gate charge enable the device to maintain high efficiency over a wide range of load current.

PWM Operation

The LTC3529 operates in a fixed-frequency PWM mode using current-mode control at all load currents. At very light loads, the LTC3529 will exhibit pulse-skipping operation.

Soft-Start

The LTC3529 provides soft-start by ramping the inductor current limit from zero to its peak value in approximately 2ms. The internal soft-start capacitor is discharged in the event of a fault, thermal shutdown or when the IC is disabled via the $\overline{SHDN}$ pin.

OPERATION

Oscillator

An internal oscillator sets the switching frequency to 1.5MHz.

Shutdown

The LTC3529 is shut down by pulling the $\overline{SHDN}$ pin below 0.35V, and activated by pulling the $\overline{SHDN}$ pin above 1V. Note that $\overline{SHDN}$ can be driven above V_{IN} or V_{OUT}, as long as it is limited to less than the absolute maximum rating.

Error Amplifier

The error amplifier is a transconductance amplifier with an internal compensation network. Internal clamps limit the minimum and maximum error amplifier output voltage to improve the large-signal transient response.

Current Sensing

Lossless current sensing converts the peak current signal of the N-channel MOSFET switch into a voltage that is summed with the internal slope compensation. The summed signal is compared to the error amplifier output to provide a peak current control command for the PWM. Peak switch current is limited to approximately 2A independent of input or output voltage.

Current Limit

The current limit comparator shuts off the N-channel MOSFET switch when the current limit threshold is reached. The current limit comparator delay time to output is typically 40ns.

Fault Detection

To prevent the device from providing power to a shorted output, the switch current is monitored to detect an overcurrent condition. In the event that the switch current reaches the current limit for longer than 22ms, the fault flag is asserted ($\overline{FAULT}$ pulls low) and the device is shut down. If the auto-restart option is enabled (RST high), the device will automatically attempt to restart every 22ms until the short is removed. If auto-restart is disabled (RST low), the IC will remain shut down until being manually restarted by toggling $\overline{SHDN}$ or cycling the input voltage. A soft-start sequence is initiated when the device restarts. If output short-circuits are common in the application, latchoff mode is highly recommended for maximum level of robustness.

Note: When V_{OUT} is released from a short-circuit condition, it is possible for the output to momentarily exceed the maximum output voltage rating. In cases where repeated shorts are expected, V_{OUT} should be protected by the addition of a 5.6V Zener clamp from V_{OUT} to GND. Alternatively, C_{OUT} can be increased to 47µF or greater.

Zero-Current Comparator

The zero-current comparator monitors the inductor current to the output and shuts off the synchronous rectifier when this current falls below approximately 20mA. This prevents the inductor current from reversing in polarity, thereby improving efficiency at light loads.

Anti-Ringing Control

The anti-ringing circuit connects a resistor across the inductor to damp the ringing on SW in discontinuous conduction mode. The ringing of the resonant circuit formed by L and C_{SW} (capacitance on the SW pin) is low energy but can cause EMI radiation.

Output Disconnect

The LTC3529 provides true output disconnect by eliminating body diode conduction of the internal P-channel MOSFET rectifier. This allows V_{OUT} to go to zero volts during shutdown, drawing no current from the input source. It also provides inrush current limiting at turn-on, minimizing surge currents seen by the input supply.

Thermal Shutdown

If the die temperature reaches approximately 160°C, the device enters thermal shutdown, the fault flag is asserted ($\overline{FAULT}$ pulls low) and all switches are turned off. The device is enabled and a soft-start sequence is initiated when the die temperature drops by approximately 10°C.

PCB Layout

Due to the high frequency operation of the LTC3529, board layout is extremely critical to minimize transients caused by stray inductance. Keep the output filter capacitor as close as possible to the V_{OUT} pin and use very low ESR/ESL ceramic capacitors tied to a good ground plane.

APPLICATIONS INFORMATION

The basic LTC3529 application circuit is shown in the Typical Application on the front page. The external component selection is determined by the desired output current and ripple voltage requirements of each particular application. However, basic guidelines and considerations for the design process are provided in this section.

Output Capacitor Selection

A low ESR (equivalent series resistance) output capacitor should be used at the output of the LTC3529 to minimize the output voltage ripple. Multilayer ceramic capacitors are an excellent choice as they have extremely low ESR and are available in small footprints. X5R and X7R dielectric materials are strongly recommended over Y5V dielectric because of their improved voltage and temperature coefficients. Neglecting the capacitor ESR and ESL (equivalent series inductance), the peak-to-peak output voltage ripple can be calculated by the following formula, where f is the frequency in MHz, C_{OUT} is the capacitance in µF, and I_{LOAD} is the output current in amps.

$$\Delta V_{P-P} = \frac{I_{LOAD}\left(V_{OUT} - V_{IN}\right)}{C_{OUT} \bullet V_{OUT} \bullet f}$$

The internal loop compensation of the LTC3529 is designed to be stable with output capacitor values of 6.5µF or greater. This complies with USB On-The-Go specifications, which limit the output capacitance to 6.5µF. In general use of the LTC3529, the output capacitor should be chosen large enough to reduce the output voltage ripple to acceptable levels. A 6.8µF to 10µF output capacitor is sufficient for most applications. Larger values up to 22µF may be used to obtain extremely low output voltage ripple and improved transient response.

Although ceramic capacitors are recommended, low ESR tantalum capacitors may also be used. A small ceramic capacitor in parallel with a larger tantalum capacitor is recommended in demanding applications that have large load transients.

Input Capacitor Selection

Low ESR input capacitors reduce input switching noise and reduce the peak current drawn from the battery. It follows that ceramic capacitors are also a good choice for input decoupling and should be located as close as possible to the device. A 3.3µF input capacitor is sufficient for most applications. Larger values may be used without limitation.

Capacitor Vendor Information

Both the input and output capacitors used with the LTC3529 must have low ESR and be designed to handle the large AC currents generated by switching converters. The vendors in Table 1 provide capacitors that are well suited to LTC3529 application circuits.

Table 1. Capacitor Vendor Information

MANUFACTURER	WEB SITE	PHONE	FAX
Taiyo Yuden	www.t-yuden.com	(408) 573-4150	(408) 573-4159
TDK	www.component.tdk.com	(847) 803-6100	(847) 803-6296
Sanyo	www.secc.co.jp	(619) 661-6322	(619) 661-1055
AVX	www.avxcorp.com	(803) 448-9411	(803) 448-1943
Murata	www.murata.com	(814) 237-1431	(814) 238-0490
Sumida	www.sales@us.sumida.com	(408) 321-9660	(408) 321-9308

APPLICATIONS INFORMATION

Inductor Selection

The LTC3529 can utilize small surface-mount chip inductors due to its fast 1.5MHz switching frequency. Larger values of inductance will allow slightly greater output current capability by reducing the inductor ripple current. Increasing the inductance above 10µH will increase component size while providing little improvement in output current capability.

USB On-The-Go specifications limit output capacitance to 6.5µF. When using a 6.5µF output capacitance, a 4.7µH inductor must be used to maintain stability. Larger inductors may be used with larger output capacitors.

The minimum inductance value for a given allowable inductor ripple ΔI (in Amps peak-to-peak) is given by:

$$L > \frac{V_{IN(MIN)} \bullet \left(V_{OUT} - V_{IN(MIN)}\right)}{\Delta I \bullet f \bullet V_{OUT}} \mu H$$

where $V_{IN(MIN)}$ is the minimum input voltage, f is the operating frequency in MHz (1.5MHz Typ), and V_{OUT} is the output voltage (5V).

The inductor current ripple is typically set for 20% to 40% of the maximum inductor current (I_P). High frequency ferrite core inductor materials reduce frequency dependent power losses compared to cheaper powdered iron cores, improving efficiency. To achieve high efficiency, a low ESR inductor should be utilized. The inductor must have a saturation current rating greater than the worst case average inductor current plus half the ripple current. Molded chokes and some chip inductors usually do not have enough core to support peak LTC3529 inductor currents. To minimize radiated noise, use a shielded inductor. See Table 2 for suggested components and suppliers.

Table 2. Representative Surface Mount Inductors

MANUFACTURER	PART NUMBER	VALUE (µH)	MAX CURRENT (A)	DCR (Ω)	HEIGHT (mm)
Sumida	CDRH5D16NP	4.7	2.15	0.064	1.8
TDK	VLF5014S	4.7	2	0.098	1.4
Coilcraft	MSS6122	4.7	1.82	0.065	2.2
Cooper Bussmann	SD25-4R7	4.7	2.3	0.043	2.5

PCB Layout Guidelines

The LTC3529 switches large currents at high frequencies. Special care should be given to the PCB layout to ensure stable, noise-free operation. Figure 1 depicts the recommended PCB layout to be utilized for the LTC3529. A few key guidelines follow:

1. All circulating current paths should be kept as short as possible. This can be accomplished by keeping the copper traces to all components in Figure 1 short and wide. Capacitor ground connections should via down to the ground plane in the shortest route possible. The bypass capacitors on V_{IN} and V_{OUT} should be placed close to the IC and should have the shortest possible paths to ground.
2. The PGND pin should be shorted directly to the exposed pad, as shown in Figure 1. This provides a single point connection between the small signal ground and the power ground, as well as a wide trace for power ground.
3. All the external components shown in Figure 1 and their connections should be placed over a complete ground plane.
4. Use of multiple vias in the die attach pad will enhance the thermal environment of the converter, especially if the vias extend to a ground plane region on the exposed bottom surface or inner layers of the PCB.

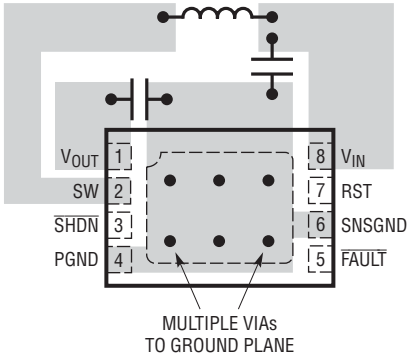

Figure 1. LTC3529 Recommended PCB Layout

TYPICAL APPLICATIONS

Li-Ion Battery to 5V at 100mA or 500mA for USB OTG Host Supply

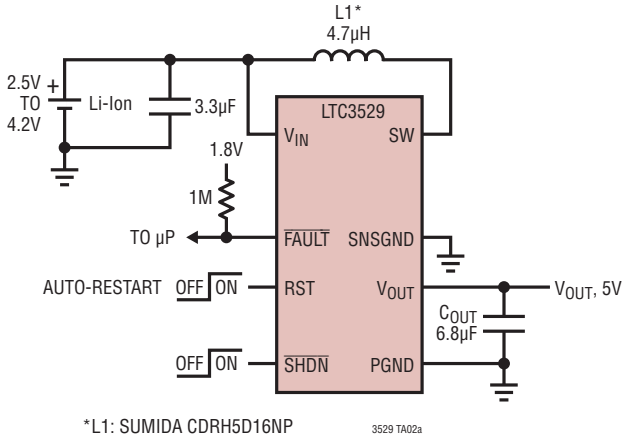

Overcurrent Event V_{RST} High

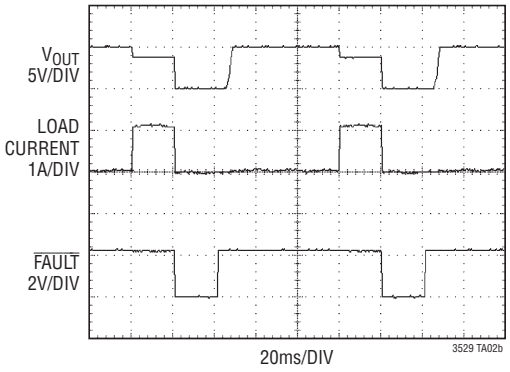

Overcurrent Event V_{RST} Low

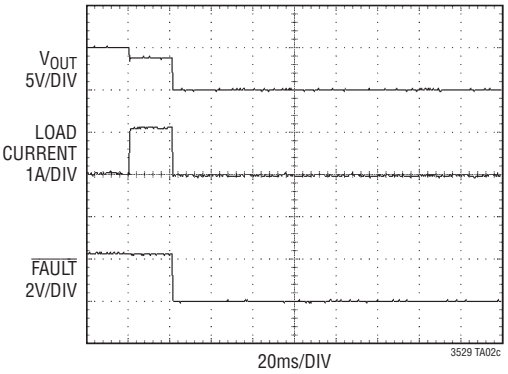

2 Alkaline Cells to 5V at 350mA

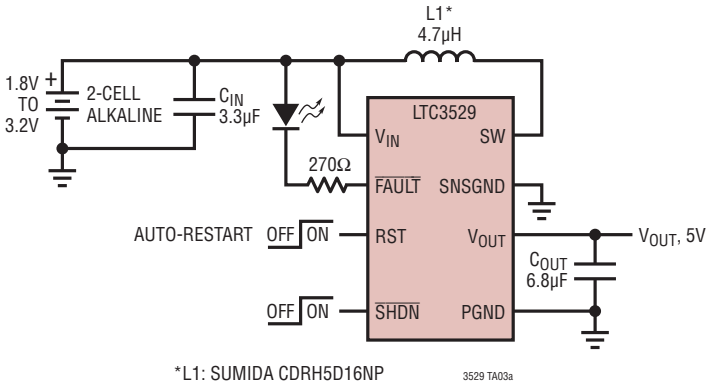

2 Alkaline Cells to 5V Efficiency

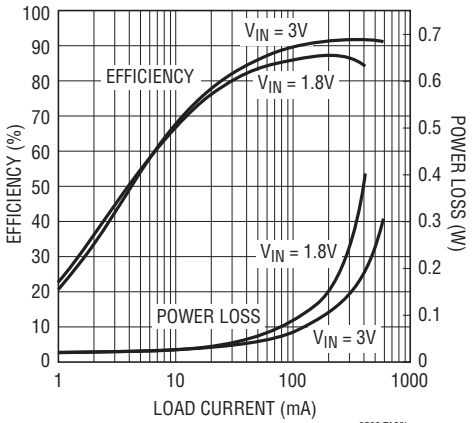

COUT = 6.8µF
INDUCTOR = 4.7µH,
COOPER BUSSMANN SD25-4R7

PACKAGE DESCRIPTION

DCB Package
8-Lead Plastic DFN (2mm × 3mm)
(Reference LTC DWG # 05-08-1718 Rev A)

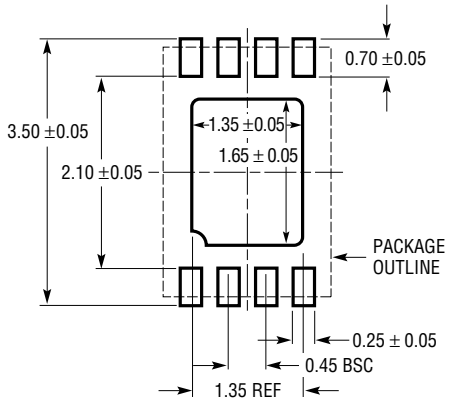

RECOMMENDED SOLDER PAD PITCH AND DIMENSIONS
APPLY SOLDER MASK TO AREAS THAT ARE NOT SOLDERED

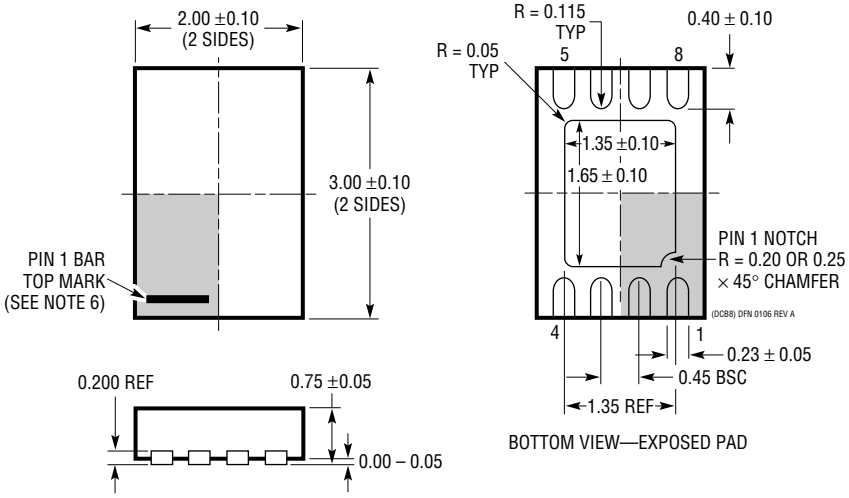

BOTTOM VIEW—EXPOSED PAD

NOTE:
1. DRAWING IS NOT A JEDEC PACKAGE OUTLINE
2. DRAWING NOT TO SCALE
3. ALL DIMENSIONS ARE IN MILLIMETERS
4. DIMENSIONS OF EXPOSED PAD ON BOTTOM OF PACKAGE DO NOT INCLUDE MOLD FLASH. MOLD FLASH, IF PRESENT, SHALL NOT EXCEED 0.15mm ON ANY SIDE
5. EXPOSED PAD SHALL BE SOLDER PLATED
6. SHADED AREA IS ONLY A REFERENCE FOR PIN 1 LOCATION ON THE TOP AND BOTTOM OF PACKAGE

Information furnished by Linear Technology Corporation is believed to be accurate and reliable. However, no responsibility is assumed for its use. Linear Technology Corporation makes no representation that the interconnection of its circuits as described herein will not infringe on existing patent rights.

RELATED PARTS

PART NUMBER	DESCRIPTION	COMMENTS
LTC3400/LTC3400B	600mA (I_{SW}), 1.2MHz, Synchronous Step-Up DC/DC Converter	92% Efficiency, V_{IN}: 0.85V to 5V, $V_{OUT(MAX)}$ = 5V, I_Q = 19µA/300µA, I_{SD} <1µA, ThinSOT™ Package
LTC3401	1A (I_{SW}), 3MHz, Synchronous Step-Up DC/DC Converter	97% Efficiency, V_{IN}: 0.85V to 5V, $V_{OUT(MAX)}$ = 5.5V, I_Q = 38µA, I_{SD} <1µA, MS10 Package
LTC3402	2A (I_{SW}), 3MHz, Synchronous Step-Up DC/DC Converter	97% Efficiency, V_{IN}: 0.85V to 5V, $V_{OUT(MAX)}$ = 5.5V, I_Q = 38µA, I_{SD} <1µA, MS10 Package
LTC3421	3A (I_{SW}), 3MHz Synchronous Step-Up DC/DC Converter with Output Disconnect	94% Efficiency, V_{IN}: 0.85V to 4.5V, $V_{OUT(MAX)}$ = 5.25V, I_Q = 12µA, I_{SD} <1µA, 4mm × 4mm QFN-24 Package
LTC3422	1.5A (I_{SW}), 3MHz Synchronous Step-Up DC/DC with Output Disconnect Converter	94% Efficiency, V_{IN}: 0.85V to 4.5V, $V_{OUT(MAX)}$ = 5.25V, I_Q = 25µA, I_{SD} <1µA, 3mm × 3mm DFN-10 Package
LTC3426	2A (I_{SW}), 1.5MHz, Step-Up DC/DC Converter	92% Efficiency, V_{IN}: 1.6V to 5.5V, $V_{OUT(MAX)}$ = 5V, I_Q = 600µA, I_{SD} <1µA, ThinSOT Package
LTC3427	500mA (I_{SW}), 1.25MHz Synchronous Step-Up DC/DC Converter with Output Disconnect	94% Efficiency, V_{IN}: 1.8V to 5V, $V_{OUT(MAX)}$ = 5.25V, I_Q = 350µA, I_{SD} <1µA, 2mm × 2mm DFN-6 Package
LTC3429/LTC3429B	600mA (I_{SW}), 550kHz, Synchronous Step-Up DC/DC Converter with Soft-Start/Output Disconnect	96% Efficiency, V_{IN}: 0.85V to 4.3V, $V_{OUT(MAX)}$ = 5V, I_Q = 20µA, I_{SD} <1µA, ThinSOT Package
LTC3458/LTC3458L	1.4A/1.7A (I_{SW}), 1.5MHz Synchronous Step-Up DC/DC	94% Efficiency, V_{IN}: 0.85V to 6V, $V_{OUT(MAX)}$ = 7.5V/6V, I_Q = 15µA, I_{SD} <1µA, 3mm × 4mm DFN-12 Package
LTC3459	80mA (I_{SW}), Synchronous Step-Up DC/DC Converter	92% Efficiency, V_{IN}: 1.5V to 5.5V, $V_{OUT(MAX)}$ = 10V, I_Q = 10µA, I_{SD} <1µA, ThinSOT Package
LT3494/LT3494A	180mA/350mA (I_{SW}), High Efficiency Step-Up DC/DC Converter with Output Disconnect	85% Efficiency, V_{IN}: 2.3V to 16V, $V_{OUT(MAX)}$ = 38V, I_Q = 65µA, I_{SD} <1µA, 2mm × 3mm DFN-6, ThinSOT Package
LTC3525-3/ LTC3525-3.3/ LTC3525-5	400mA (I_{SW}), Synchronous Step-Up DC/DC Converter with Output Disconnect	94% Efficiency, V_{IN}: 0.85V to 4V, $V_{OUT(MAX)}$ = 3V/3.3V/5V, I_Q = 7µA, I_{SD} <1µA, SC-70 Package
LTC3526/LTC3526L/ LTC3526B	500mA (I_{SW}), 1MHz Synchronous Step-Up DC/DC Converter with Output Disconnect	94% Efficiency, V_{IN}: 0.85V to 5V, $V_{OUT(MAX)}$ = 5.25V, I_Q = 9µA, I_{SD} <1µA, 2mm × 2mm DFN-6 Package
LTC3527/LTC3527-1	Dual 800mA and 400mA (I_{SW}), 2.2MHz, Synchronous Step-Up DC/DC Converter with Output Disconnect	94% Efficiency, V_{IN}: 0.7V to 5V, $V_{OUT(MAX)}$ = 5.25V, I_Q = 12µA, I_{SD} <1µA, 3mm × 3mm QFN-16 Package
LTC3528	1A (I_{SW}), 1MHz Synchronous Step-Up DC/DC Converter with Output Disconnect	94% Efficiency, V_{IN}: 0.7V to 5V, $V_{OUT(MAX)}$ = 5.25V, I_Q = 12µA, I_{SD} <1µA, 2mm × 3mm DFN-8 Package
LTC3537	600mA, 2.2MHz, Synchronous Step-Up DC/DC Converter with Output Disconnect and 100mA LDO	94% Efficiency, V_{IN}: 0.7V to 5V, $V_{OUT(MAX)}$ = 5.25V, I_Q = 30µA, I_{SD} <1µA, 3mm × 3mm QFN-16 Package
LTC3539	2A , 2MHz, Synchronous Step-Up DC/DC Converter with Output Disconnect	94% Efficiency, V_{IN}: 0.7V to 5V, $V_{OUT(MAX)}$ = 5.25V, I_Q = 10µA, I_{SD} <1µA, 2mm × 3mm DFN-8 Package

ThinSOT is a trademark of Linear Technology Corporation.

Linear Technology Corporation
1630 McCarthy Blvd., Milpitas, CA 95035-7417
(408) 432-1900 • FAX: (408) 434-0507 • www.linear.com

LT 0709 REV B • PRINTED IN USA

© LINEAR TECHNOLOGY CORPORATION 2009