Micropower Synchronous Buck-Boost DC/DC Converter with Automatic Burst Mode Operation

FEATURES

- **Regulated Output with Input Voltages Above, Below, or Equal to the Output**
- **Single Inductor, No Schottky Diodes Required**
- **Manual or Programmable Automatic Burst Mode® Operation**
- **Programmable Average Input Current Limit**
- **Up to 1.2A Continuous Output Current from a Single Lithium-Ion Cell**
- **High Efficiency: Up to 95%**
- **Output Disconnect in Shutdown**
- 2.4V to 5.5V Input Range
- 2.4V to 5.25V Output Range
- 35µA Quiescent Current in Burst Mode Operation
- Programmable Frequency from 300kHz to 2MHz
- <1µA Shutdown Current
- Small, Thermally Enhanced 12-Lead (4mm × 3mm) DFN Package

APPLICATIONS

- PDA/'SMART' Phones
- Handheld Computers
- MP3 Players
- Handheld Instruments
- Digital Cameras
- Wireless Handsets
- USB Peripherals

DESCRIPTION

The LTC®3442 is a highly efficient, fixed frequency, Buck-Boost DC/DC converter, which operates from input voltages above, below, and equal to the output voltage. The topology incorporated in the IC provides a continuous transfer function through all operating modes, making the product ideal for a single Lithium-Ion or multicell alkaline applications where the output voltage is within the battery voltage range.

The device includes two 0.10Ω N-channel MOSFET switches and two 0.10Ω P-channel switches. Operating frequency and average input current limit can each be programmed with an external resistor. Quiescent current is only 35µA in Burst Mode operation, maximizing battery life in portable applications. Automatic Burst Mode operation allows the user to program the load current for Burst Mode operation, or to control it manually.

Other features include 1µA shutdown current, programmable soft-start, peak current limit and thermal shutdown. The LTC3442 is available in a low profile, thermally enhanced 12-lead (4mm × 3mm × 0.75mm) DFN package.

LT, LTC and LT are registered trademarks of Linear Technology Corporation. Burst Mode is a registered trademark of Linear Technology Corporation. All other trademarks are the property of their respective owners. Protected by U.S. Patents, including 6404251, 6166527.

TYPICAL APPLICATION

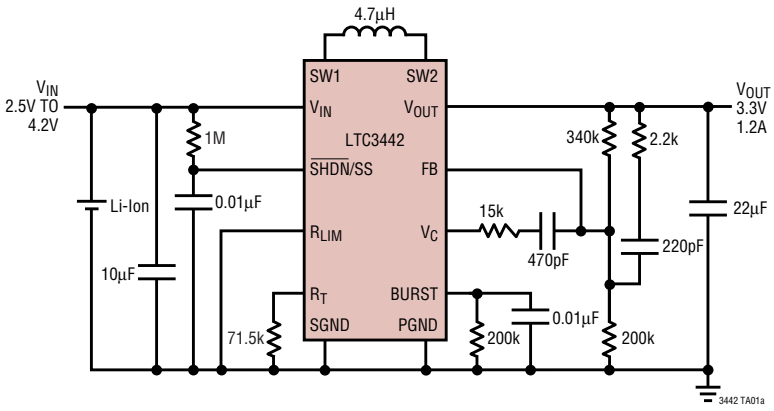

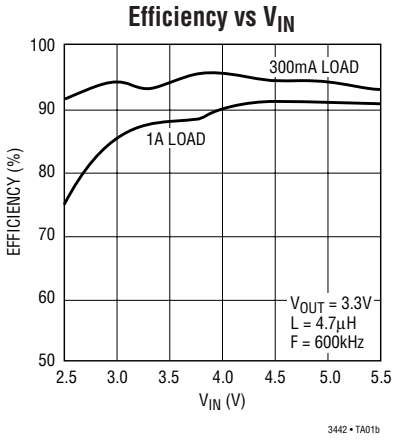

ABSOLUTE MAXIMUM RATINGS

(Note 1)

V_{IN}, V_{OUT} Voltage ..... –0.3 to 6V
SW1, SW2 Voltage
DC ..... –0.3 to 6V
Pulsed <100ns ..... –0.3 to 7V
$\overline{SHDN}$/SS, BURST Voltage ..... –0.3 to 6V
Operating Temperature (Note 2) ..... –40°C to 85°C
Maximum Junction Temperature (Note 4) ..... 125°C
Storage Temperature Range ..... –65°C to 125°C

PACKAGE/ORDER INFORMATION

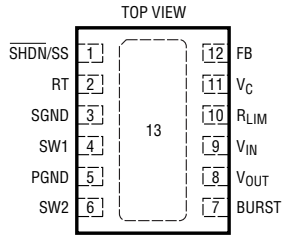

DE12 PACKAGE
12-LEAD (4mm × 3mm) PLASTIC DFN

T_{JMAX} = 125°C, θ_{JA} = 53°C/W 1-Layer Board
θ_{JA} = 43°C/W 4-Layer Board, θ_{JC} = 4.3°C/W
EXPOSED PAD IS PGND (PIN 13), MUST BE SOLDERED TO PCB

ORDER PART NUMBER	DE PART MARKING
LTC3442EDE	3442

Order Options Tape and Reel: Add #TR
Lead Free: Add #PBF Lead Free Tape and Reel: Add #TRPBF
Lead Free Part Marking: http://www.linear.com/leadfree/

Consult LTC Marketing for parts specified with wider operating temperature ranges.

ELECTRICAL CHARACTERISTICS

The ● denotes the specifications which apply over the full operating temperature range, otherwise specifications are at T_A = 25°C. V_{IN} = V_{OUT} = 3.6V, R_T = 64.9k, unless otherwise noted.

PARAMETER	CONDITIONS		MIN	TYP	MAX	UNITS
Input Start-Up Voltage		●		2.3	2.4	V
Output Voltage Adjust Range		●	2.4		5.25	V
Feedback Voltage		●	1.19	1.22	1.25	V
Feedback Input Current	V_{FB} = 1.22V			1	50	nA
Quiescent Current – Burst Mode Operation	V_{FB} = 1.22V, BURST = 0V (Note 3)			35	60	µA
Quiescent Current – Shutdown	$\overline{SHDN}$ = 0V, V_{OUT} = 0V, Not Including Switch Leakage			0.1	1	µA
Quiescent Current – Active	BURST = V_{IN} (Note 3)			600	1100	µA
NMOS Switch Leakage	Switches B and C			0.1	2	µA
PMOS Switch Leakage	Switches A and D			0.1	3	µA
NMOS Switch On Resistance	Switches B and C			0.10		Ω
PMOS Switch On Resistance	Switches A and D			0.10		Ω
Input Current Limit		●	2	3		A
Reverse Current Limit				0.5		A
Burst Mode Operation Current Limit				0.9		A
Max Duty Cycle	Boost (% Switch C On) Buck (% Switch A In)	● ●	70 100	88		% %
Min Duty Cycle		●			0	%
Frequency Accuracy		●	570	670	770	kHz
Error Amp A_{VOL}				90		dB
Error Amp Source Current				11		µA
Error Amp Sink Current				300		µA
Burst Threshold (Falling)				0.88		V
Burst Threshold (Rising)				1.12		V

ELECTRICAL CHARACTERISTICS

The ● denotes the specifications which apply over the full operating temperature range, otherwise specifications are at T_A = 25°C. V_{IN} = V_{OUT} = 3.6V, R_T = 64.9k, unless otherwise noted.

PARAMETER	CONDITIONS		MIN	TYP	MAX	UNITS
Burst Current Ratio	Ratio of I_{OUT} to I_{BURST}			20,000		
Input Current Ratio	Ratio of I_{IN} to I_{RLIM}, I_{IN} = 0.5A			70,000		
R_{LIM} Threshold				0.95		V
$\overline{SHDN}$/SS Threshold	When IC is Enabled When EA is at Max Boost Duty Cycle	●	0.4	0.7 2.2	1.4 2.4	V V
$\overline{SHDN}$/SS Input Current	$V_{\overline{SHDN}}$ = 5.5V			0.01	1	µA

Note 1: Stresses beyond those listed under Absolute Maximum Ratings may cause permanent damage to the device. Exposure to any Absolute Maximum Rating condition for extended periods may affect device reliability and lifetime.

Note 2: The LTC3442E is guaranteed to meet performance specifications from 0°C to 85°C. Specifications over –40°C to 85°C operating temperature range are assured by design, characterization and correlation with statistical process controls.

Note 3: Current Measurements are performed when the outputs are not switching.

Note 4: This IC includes overtemperature protection that is intended to protect the device during momentary overload conditions. Junction temperature will exceed 125°C when overtemperature protection is active. Continuous operation above the specified maximum operating junction temperature may result in device degradation or failure.

TYPICAL PERFORMANCE CHARACTERISTICS

(T_A = 25°C unless otherwise specified).

Efficiency vs Load

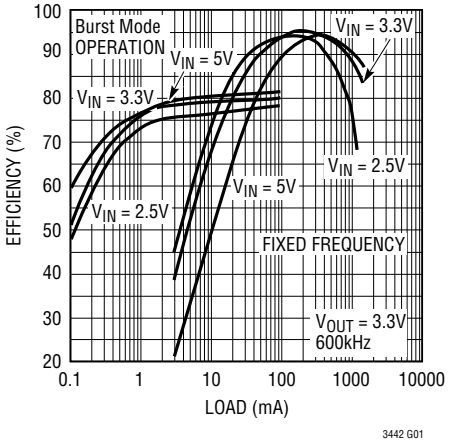

Efficiency and Power Loss vs Load

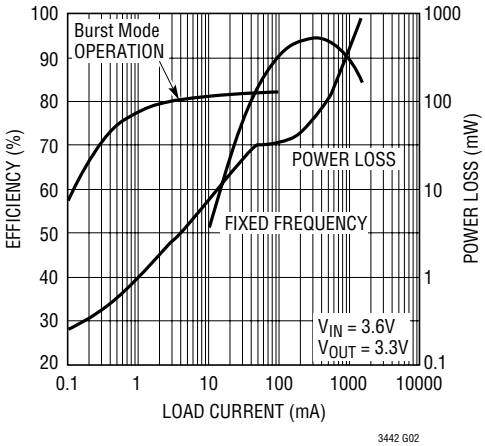

Efficiency vs Frequency

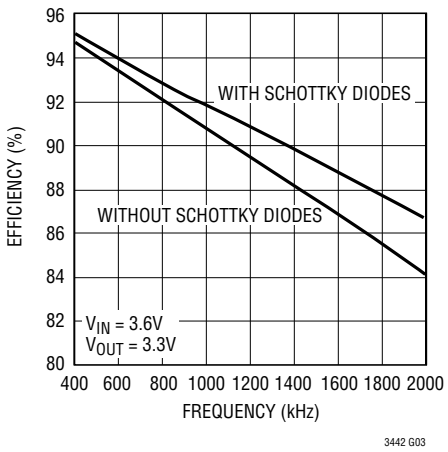

Input Current Mirror Linearity

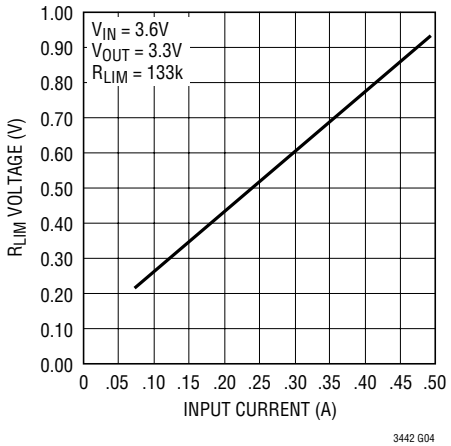

Average Input Current Limit vs V_{IN} (Normalized)

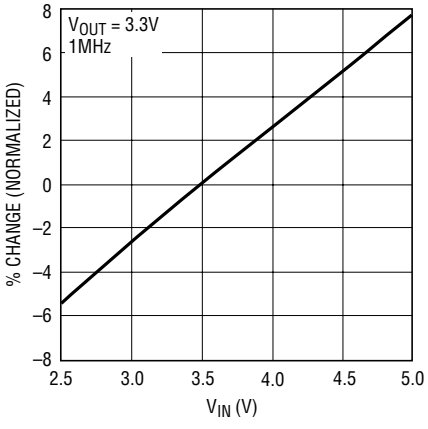

Average Input Current Limit vs Frequency (Normalized)

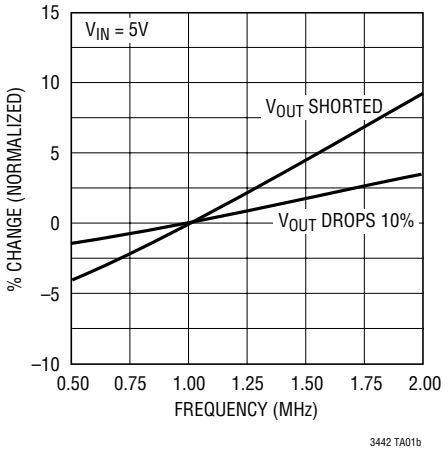

TYPICAL PERFORMANCE CHARACTERISTICS (T_A = 25°C unless otherwise specified).

Quiescent Current vs V_{IN} (Fixed Frequency Mode)

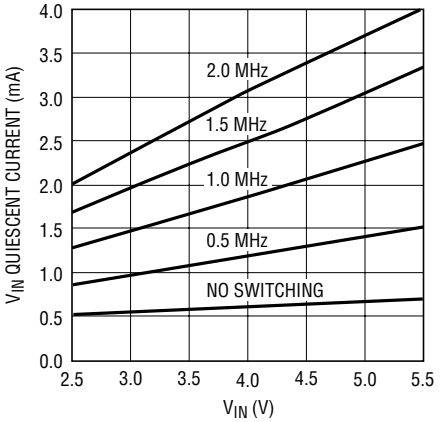

Burst Mode Quiescent Current vs V_{IN}

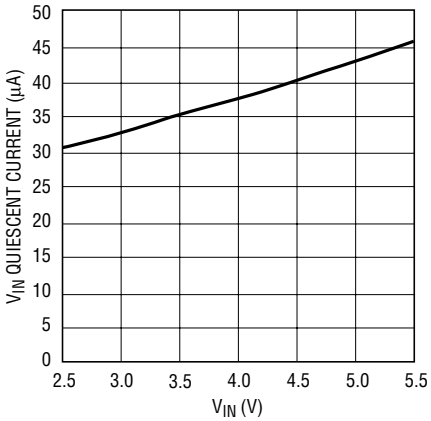

Peak Current Clamp vs V_{IN}

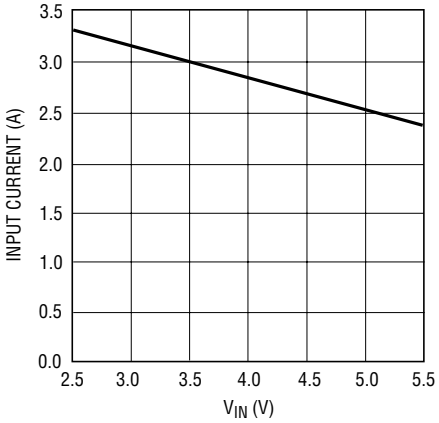

Automatic Burst Mode Threshold vs R_{BURST}

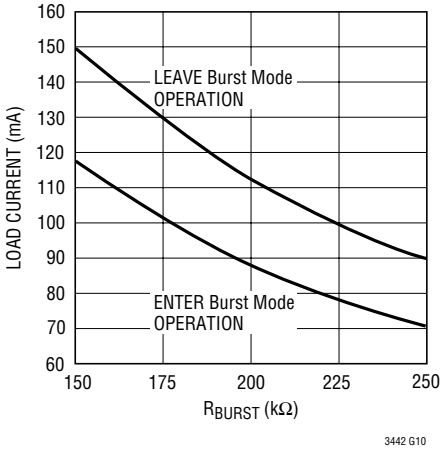

Minimum Start Voltage vs Temperature

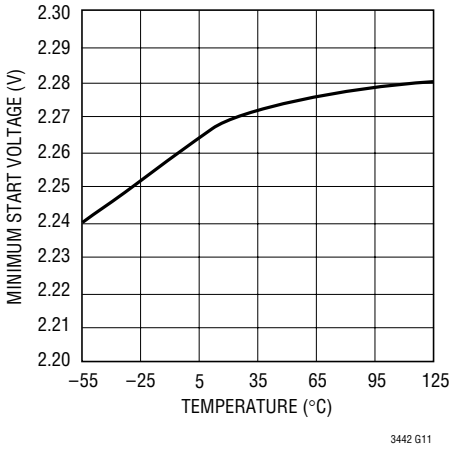

Average Input Current Limit vs Temperature (Normalized)

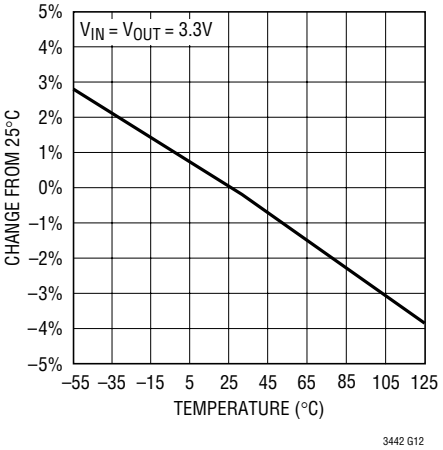

Frequency Change vs Temperature (Normalized)

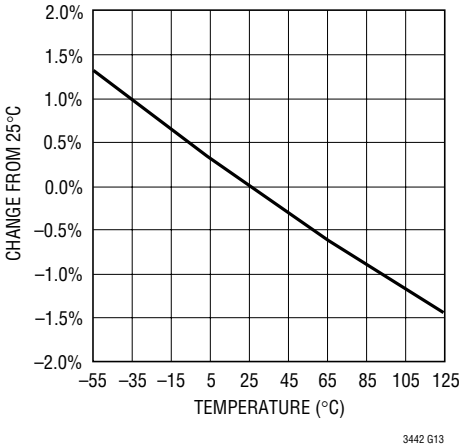

Feedback Voltage vs Temperature (Normalized)

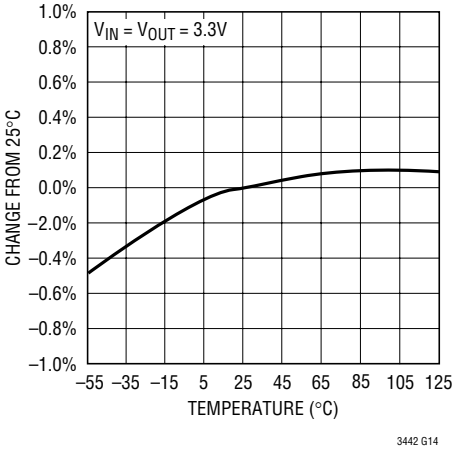

Switch Pins Before Entering Boost Mode

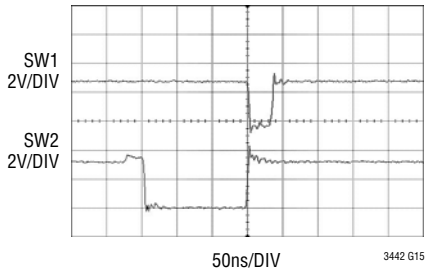

V_{IN} = 2.9V
V_{OUT} = 3.3V AT 500mA

TYPICAL PERFORMANCE CHARACTERISTICS (T_A = 25°C unless otherwise specified).

Switch Pins in Buck-Boost Mode

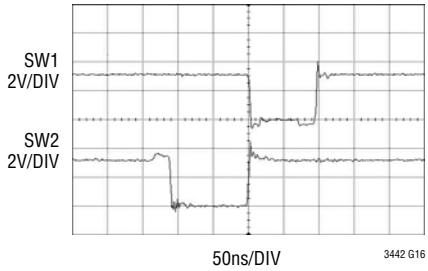

V_{IN} = 3.3V
V_{OUT} = 3.3V AT 500mA

Switch Pins Entering Buck-Boost Mode

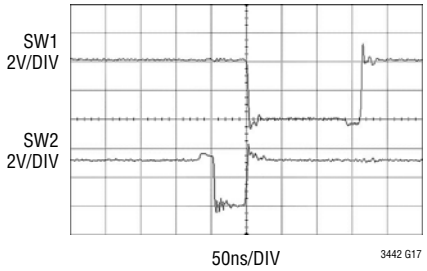

V_{IN} = 4.2V
V_{OUT} = 3.3V AT 500mA

Output Ripple at 1A Load

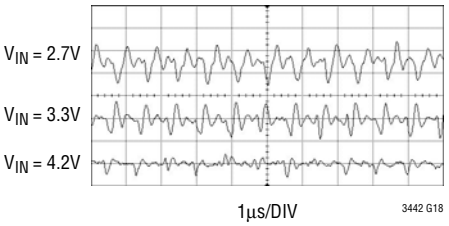

V_{OUT}
20mV/DIV
AC COUPLED

Load Transient Response in Fixed Frequency Mode, No Load to 1A

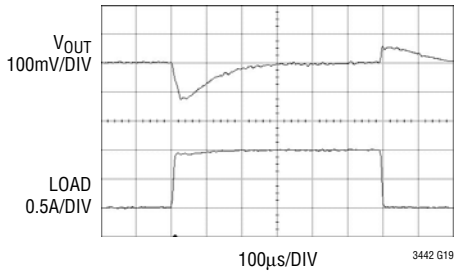

V_{IN} = 3.6V
V_{OUT} = 3.3V
C_{OUT} = 47µF, X5R CERAMIC

Load Transient Response in Auto Burst Mode Operation, No Load to 1A

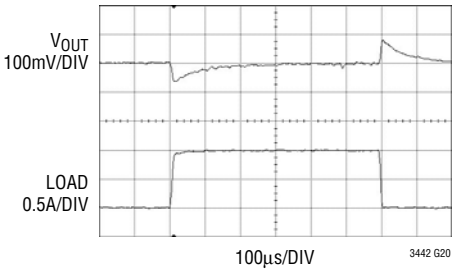

V_{IN} = 3.6V
V_{OUT} = 3.3V
C_{OUT} = 47µF, X5R CERAMIC + 100µF
LOW ESR TANTALUM

Burst Mode Operation

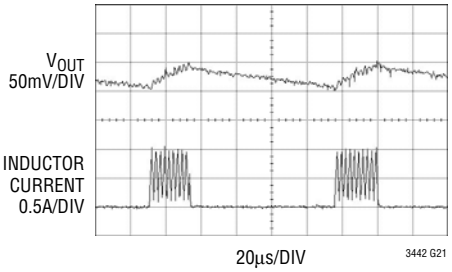

C_{OUT} = 100µF
LOW ESR TANTALUM

Transition from Burst Mode Operation to Fixed Frequency Mode

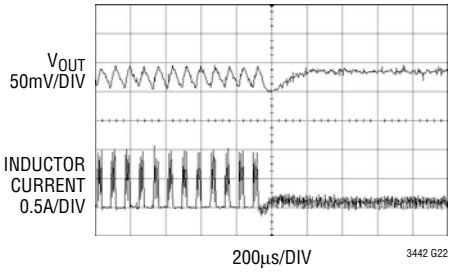

C_{OUT} = 100µF
LOW ESR TANTALUM

Pulsed Overload Using Average Input Current Limit

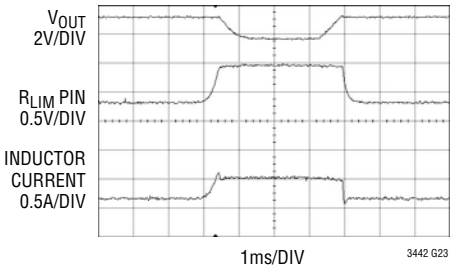

R_{LIM} = 133k
C_{LIM} = .001µF

PIN FUNCTIONS

$\overline{SHDN}$/SS (Pin 1): Combined Soft-Start and Shutdown. Applied voltage <0.4V shuts down the IC. Tie to >1.4V to enable the IC and >2.4V to ensure the error amp is not clamped from soft-start. For Burst Mode operation, this pin must be pulled up to within 0.5V of V_{IN}. An RC network from the shutdown command signal to this pin will provide a soft-start function by limiting the rise time of the V_C pin.

R_T (Pin 2): Programs the Frequency of the Internal Oscillator. Place a resistor from this pin to ground. See the Applications Information section for component value selection.

SGND (Pin 3): Signal Ground for the IC.

SW1 (Pin 4): Switch Pin Where Internal Switches A and B are Connected. Connect inductor from SW1 to SW2. An optional Schottky diode can be connected from SW1 to ground for a moderate efficiency improvement. Minimize trace length to reduce EMI.

PGND (Pin 5, 13): Power Ground for the Internal NMOS Power Switches. The exposed pad must be soldered to PCB ground to provide both electrical contact and a good thermal contact to the PCB.

SW2 (Pin 6): Switch Pin Where Internal Switches C and D are Connected. An optional Schottky diode can be connected from SW2 to V_{OUT} for a moderate efficiency improvement. Minimize trace length to reduce EMI.

BURST (Pin 7): Used to set the Automatic Burst Mode Operation Threshold. Place a resistor and capacitor in parallel from this pin to ground. See the Applications Information section for component value selection. For manual control, ground the pin to force Burst Mode operation, connect to V_{OUT} to force fixed frequency mode.

V_{OUT} (Pin 8): Output of the Synchronous Rectifier. A filter capacitor is placed from V_{OUT} to GND. A ceramic bypass capacitor is recommended as close to the V_{OUT} and GND pins as possible.

V_{IN} (Pin 9): Input Supply Pin. Internal V_{CC} for the IC. A 10µF ceramic capacitor is recommended as close to V_{IN} and SGND as possible.

R_{LIM} (Pin 10): Sets the Average Input Current Limit Threshold. Place a resistor and capacitor in parallel from this pin to ground. See the Applications Information section for component value selection.

V_C (Pin 11): Error Amp Output. A frequency compensation network is connected from this pin to FB to compensate the loop. During Burst Mode operation, V_C is internally connected to a hold circuit.

FB (Pin 12): Feedback Pin. Connect resistor divider tap here. The output voltage can be adjusted from 2.4V to 5.25V. The feedback reference voltage is typically 1.22V.

SIMPLIFIED BLOCK DIAGRAM

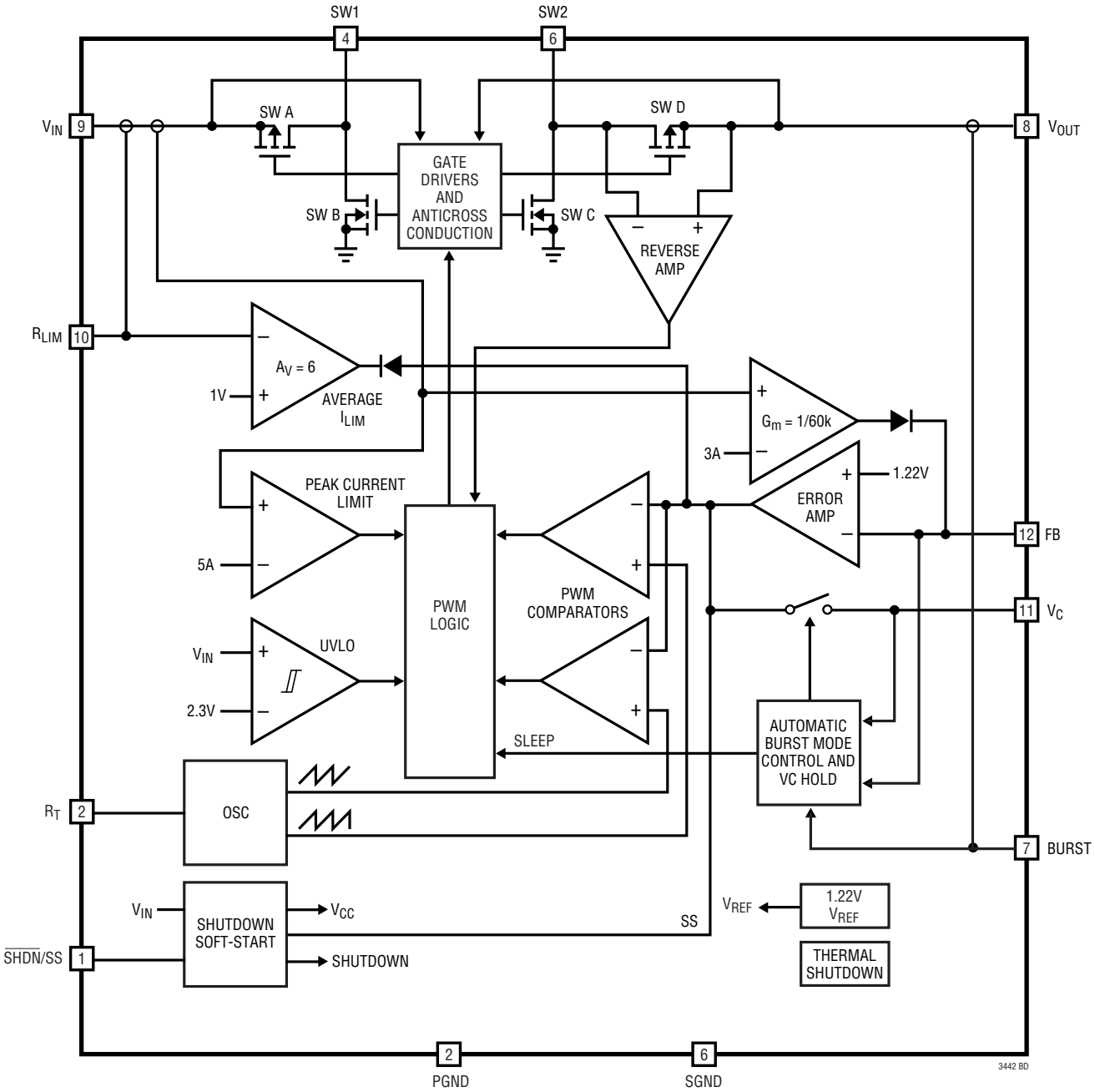

OPERATION

The LTC3442 provides high efficiency, low noise power for applications such as portable instrumentation. The LTC proprietary topology allows input voltages above, below or equal to the output voltage by properly phasing the output switches. The error amp output voltage on V_C determines the output duty cycle of the switches. Since V_C is a filtered signal, it provides rejection of frequencies from well below the switching frequency. The low $R_{DS(ON)}$, low gate charge synchronous switches provide high frequency pulse width modulation control at high efficiency. Schottky diodes across the synchronous switch D and synchronous switch B are not required, but provide a lower voltage drop during the break-before-make time (typically 15ns). Schottky diodes will improve peak efficiency by typically 1% to 2%. High efficiency is achieved at light loads when Burst Mode operation is entered and the IC's quiescent current drops to a low 35μA.

LOW NOISE FIXED FREQUENCY OPERATION

Oscillator

The frequency of operation is programmed by an external resistor from R_T to ground, according to the following equation:

$$f_{(kHz)} = \frac{43{,}300}{R_{T(k\Omega)}}$$

Error Amp

The error amplifier is a voltage mode amplifier. The loop compensation components are configured around the amplifier (from FB to V_C) to obtain stability of the converter. For improved bandwidth, an additional RC feedforward network can be placed across the upper feedback divider resistor. The voltage on SHDN/SS clamps the error amp output, V_C, to provide a soft-start function.

Internal Current Limit

There are three different current limit circuits in the LTC3442. Two have internally fixed thresholds which vary inversely with V_{IN}, the third is externally programmable, and does not vary with input voltage.

The first circuit is a high speed peak current limit amplifier that will shut off switch A if the current exceeds 5A typical. The delay to output of this amplifier is typically 50ns.

A second amplifier will begin to source current into the FB pin to drop the output voltage once the peak input current exceeds 3A typical. This method provides a closed loop means of clamping the input current. During conditions where V_{OUT} is near ground, such as during a short-circuit or during startup, this threshold is cut in half, providing a foldback feature. For this current limit feature to be most effective, the Thevenin resistance from FB to ground should be greater than 100kΩ.

Externally Programmable Current Limit

The third current limit circuit is programmed by an external resistor on R_{LIM}. This circuit works by mirroring the input current in switch A, averaging it by means of the external RC network on R_{LIM}, and comparing the resulting voltage with an internal reference. If the voltage on R_{LIM} starts to exceed 0.95V, a G_m amplifier will clamp V_C, lowering V_{OUT} to maintain control of the input current. This allows the user to program a maximum average input current, for applications such as USB, where the current draw from the bus must be limited to 500mA. The resistor and capacitor values are determined by the following equations:

$$R_{LIM(k\Omega)} = \frac{70 \bullet \left(0.86 + \frac{\left(2 \bullet V_{IN} - V_{OUT}\right)}{40}\right)}{I_{IN(AMPS)}}$$

$$C_{LIM(\mu F)} \geq \frac{0.1}{R_{LIM(k\Omega)}}$$

The programmable current limit feature is disabled in Burst Mode operation.

OPERATION

Reverse Current Limit

During fixed frequency operation, the LTC3442 operates in forced continuous conduction mode. The reverse current limit amplifier monitors the inductor current from the output through switch D. Once the negative inductor current exceeds 500mA typical, the IC will shut off switch D.

Four-Switch Control

Figure 1 shows a simplified diagram of how the four internal switches are connected to the inductor, V_{IN}, V_{OUT} and GND. Figure 2 shows the regions of operation for the LTC3442 as a function of the internal control voltage, V_{CI}. Depending on the control voltage, the IC will operate in either buck, buck/boost or boost mode. The V_{CI} voltage is a level shifted voltage from the output of the error amp (V_C) (see Figure 5). The four power switches are properly phased so the transfer between operating modes is continuous, smooth and transparent to the user. When V_{IN} approaches V_{OUT} the buck/boost region is reached where the conduction time of the four switch region is typically 150ns. Referring to Figures 1 and 2, the various regions of operation will now be described.

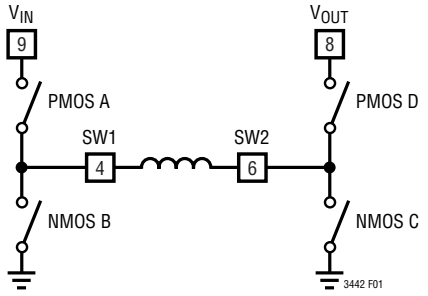

Figure 1. Simplified Diagram of Output Switches

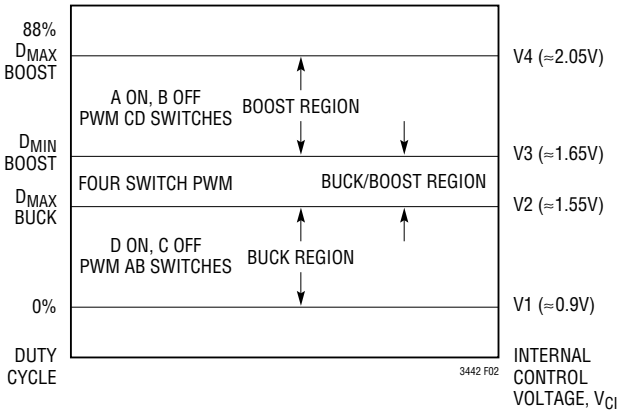

Figure 2. Switch Control vs Internal Control Voltage, V_{CI}

Buck Region ($V_{IN} > V_{OUT}$)

Switch D is always on and switch C is always off during this mode. When the internal control voltage, V_{CI}, is above voltage V1, output A begins to switch. During the off-time of switch A, synchronous switch B turns on for the remainder of the time. Switches A and B will alternate similar to a typical synchronous buck regulator. As the control voltage increases, the duty cycle of switch A increases until the maximum duty cycle of the converter in buck mode reaches DMAX_BUCK, given by:

$$DMAX_BUCK = 100 - D4_{SW}\ \%$$

where $D4_{SW}$ = duty cycle % of the four switch range.

$$D4_{SW} = (150ns \bullet f) \bullet 100\ \%$$

where f = operating frequency, Hz.

Beyond this point the "four switch," or buck/boost region is reached.

Buck/Boost or Four Switch ($V_{IN} \sim V_{OUT}$)

When the internal control voltage, V_{CI}, is above voltage V2, switch pair AD remain on for duty cycle DMAX_BUCK, and the switch pair AC begins to phase in. As switch pair AC phases in, switch pair BD phases out accordingly. When the V_{CI} voltage reaches the edge of the buck/boost range, at voltage V3, the AC switch pair completely phase out the BD pair, and the boost phase begins at duty cycle $D4_{SW}$. The input voltage, V_{IN}, where the four switch region begins is given by:

$$V_{IN} = \frac{V_{OUT}}{1-(150ns \bullet f)}$$

The point at which the four switch region ends is given by:

$$V_{IN} = V_{OUT}(1 - D) = V_{OUT}(1 - 150ns \bullet f)\ V$$

OPERATION

Boost Region ($V_{IN} < V_{OUT}$)

Switch A is always on and switch B is always off during this mode. When the internal control voltage, V_{CI}, is above voltage V3, switch pair CD will alternately switch to provide a boosted output voltage. This operation is typical to a synchronous boost regulator. The maximum duty cycle of the converter is limited to 88% typical and is reached when V_{CI} is above V4.

BURST MODE OPERATION

Burst Mode operation occurs when the IC delivers energy to the output until it is regulated and then goes into a sleep mode where the outputs are off and the IC is consuming only 35µA of quiescent current from V_{IN}. In this mode the output ripple has a variable frequency component that depends upon load current, and will typically be about 2% peak-to-peak. Burst Mode operation ripple can be reduced slightly by using more output capacitance (47µF or greater). Another method of reducing Burst Mode operation ripple is to place a small feed-forward capacitor across the upper resistor in the V_{OUT} feedback divider network (as in Type III compensation).

During the period where the device is delivering energy to the output, the peak switch current will be equal to 900mA typical and the inductor current will terminate at zero current for each cycle. In this mode the typical maximum average output current is given by:

$$I_{OUT(MAX)BURST} \approx \frac{0.2 \bullet V_{IN}}{V_{OUT} + V_{IN}} A$$

Note that the peak efficiency during Burst Mode operation is less than the peak efficiency during fixed frequency

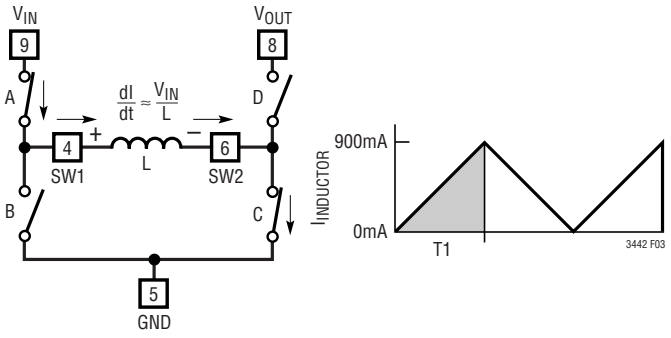

Figure 3. Inductor Charge Cycle During Burst Mode Operation

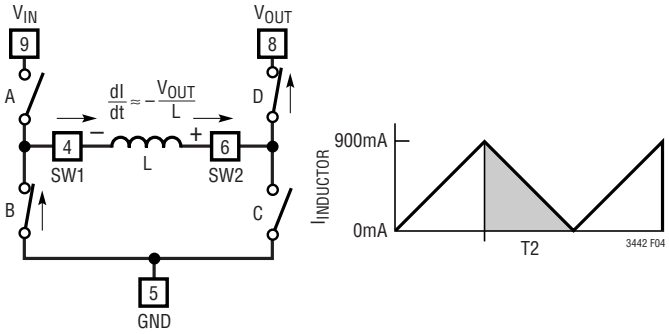

Figure 4. Inductor Discharge Cycle During Burst Mode Operation

because the part enters full-time 4-switch mode (when servicing the output) with discontinuous inductor current as illustrated in Figures 3 and 4. During Burst Mode operation, the control loop is nonlinear and cannot utilize the control voltage from the error amp to determine the control mode, therefore full-time 4-switch mode is required to maintain the Buck/Boost function. The efficiency below 1mA becomes dominated primarily by the quiescent current. The Burst Mode operation efficiency is given by:

$$EFFICIENCY \cong \frac{n \bullet I_{LOAD}}{35\mu A + I_{LOAD}}$$

where n is typically 82% during Burst Mode operation.

Automatic Burst Mode Operation Control

Burst Mode operation can be automatic or manually controlled with a single pin. In automatic mode, the IC will enter Burst Mode operation at light load and return to fixed frequency operation at heavier loads. The load current at which the mode transition occurs is programmed using a single external resistor from the BURST pin to ground, according to the following equations:

$$\text{Enter Burst Mode: } I = \frac{17.6}{R_{BURST}}$$

$$\text{Leave Burst Mode: } I = \frac{22.4}{R_{BURST}}$$

where R_{BURST} is in kΩ and I_{BURST} is the load transition

OPERATION

current in Amps. Do not use values of R_{BURST} greater than 250k.

For automatic operation, a filter capacitor should also be connected from BURST to ground to prevent ripple on BURST from causing the IC to oscillate in and out of Burst Mode operation. The equation for the minimum capacitor value is:

$$C_{BURST(MIN)} \geq \frac{C_{OUT} \bullet V_{OUT}}{60{,}000}$$

where $C_{BURST(MIN)}$ and C_{OUT} are in µF

In the event that a load transient causes the feedback pin to drop by more than 4% from the regulation value while in Burst Mode operation, the IC will immediately switch to fixed frequency mode and an internal pull-up will be momentarily applied to BURST, rapidly charging the BURST cap. This prevents the IC from immediately re-entering Burst Mode operation once the output achieves regulation.

Manual Burst Mode Operation

For manual control of Burst Mode operation, the RC network connected to BURST can be eliminated. To force fixed frequency mode, BURST should be connected to V_{OUT}. To force Burst Mode operation, BURST should be grounded. When commanding Burst Mode operation manually, the circuit connected to BURST should be able to sink up to 2mA.

For optimum transient response with large dynamic loads, the operating mode should be controlled manually by the host. By commanding fixed frequency operation prior to a sudden increase in load, output voltage droop can be minimized. Note that if the load current applied during forced Burst Mode operation (BURST pin is grounded) exceeds the current that can be supplied, the output voltage will start to droop and the IC will automatically come out of Burst Mode operation and enter fixed frequency mode, raising V_{OUT}. Once regulation is achieved, the IC will then enter Burst Mode operation once again, and the cycle will repeat, resulting in about 4% output ripple. Note that Burst Mode operation is inhibited during soft-start.

Burst Mode Operation to Fixed Frequency Transient Response

In Burst Mode operation, the compensation network is not used and V_C is disconnected from the error amplifier. During long periods of Burst mode operation, leakage currents in the external components or on the PC board could cause the compensation capacitor to charge (or discharge), which could result in a large output transient when returning to fixed frequency mode of operation, even at the same load current. To prevent this, the LTC3442 incorporates an active clamp circuit that holds the voltage on V_C at an optimal voltage during Burst Mode operation. This minimizes any output transient when returning to fixed frequency mode operation. For optimum transient

OPERATION

response, Type 3 compensation is also recommended to broad band the control loop and roll off past the two pole response of the output LC filter. (See Closing the Feedback Loop.)

Soft-Start

The soft-start function is combined with shutdown. When the $\overline{SHDN}$/SS pin is brought above 1V typical, the IC is enabled but the EA duty cycle is clamped from V_C. A detailed diagram of this function is shown in Figure 5. The components R_{SS} and C_{SS} provide a slow ramping voltage on $\overline{SHDN}$/SS to provide a soft-start function. To ensure that V_C is not being clamped, $\overline{SHDN}$/SS must be raised above 2.4V. To enable Burst Mode operation, $\overline{SHDN}$/SS must be raised to within 0.5V of V_{IN}.

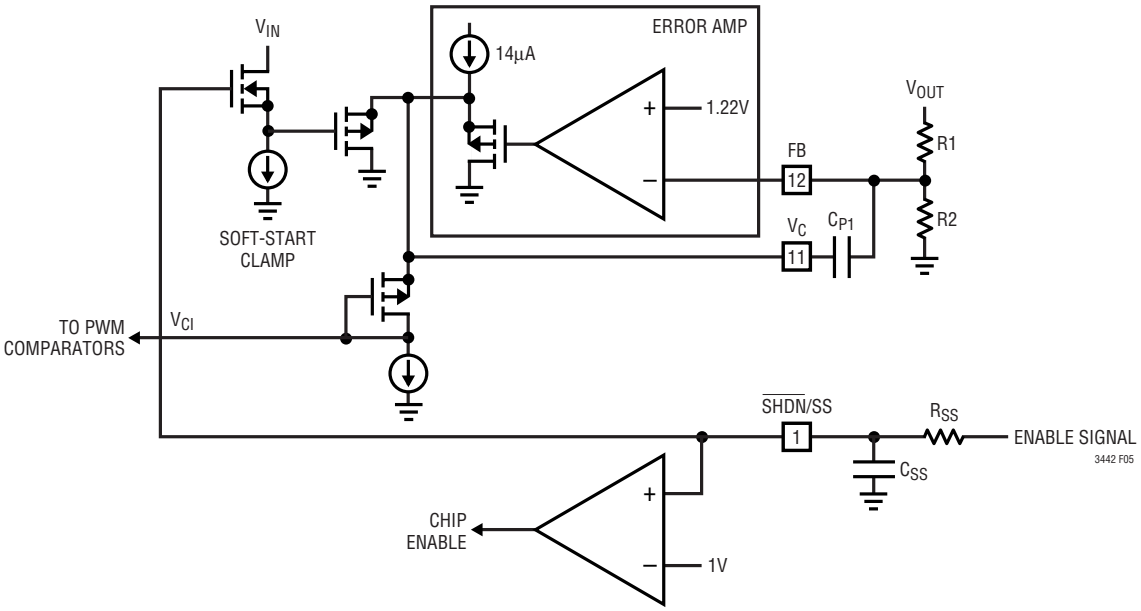

Figure 5. Soft-Start Circuitry

APPLICATIONS INFORMATION

COMPONENT SELECTION

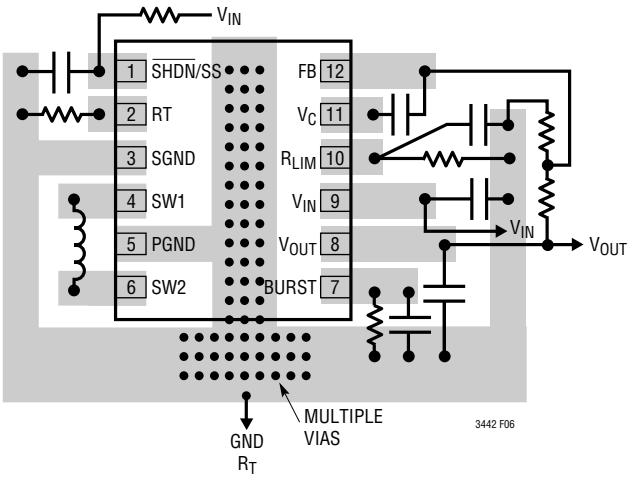

Figure 6. Recommended Component Placement. Traces Carrying High Current Should be Short and Wide. Trace Area at FB and V_C Pins are Kept Low. Lead Length to Battery Should be Kept Short. V_{OUT} and V_{IN} Ceramic Capacitors Close to the IC Pins.

Inductor Selection

The high frequency operation of the LTC3442 allows the use of small surface mount inductors. The inductor ripple current is typically set to 20% to 40% of the maximum inductor current. For a given ripple the inductance terms are given as follows:

$$L_{BOOST} > \frac{V_{IN(MIN)} \bullet (V_{OUT} - V_{IN(MIN)})}{f \bullet \Delta I_L \bullet V_{OUT}} H$$

$$L_{BUCK} > \frac{V_{OUT} \bullet (V_{IN(MAX)} - V_{OUT})}{f \bullet \Delta I_L \bullet V_{IN(MAX)}} H$$

where f = operating frequency, Hz

ΔI_L = maximum allowable inductor ripple current, A

$V_{IN(MIN)}$ = minimum input voltage, V

$V_{IN(MAX)}$ = maximum input voltage, V

V_{OUT} = output voltage, V

$I_{OUT(MAX)}$ = maximum output load current

For high efficiency, choose a ferrite inductor with a high frequency core material to reduce core loses. The inductor should have low ESR (equivalent series resistance) to reduce the I^2R losses, and must be able to handle the peak inductor current without saturating. Molded chokes or chip inductors usually do not have enough core to support the peak inductor currents in the 1A to 2A region. To minimize radiated noise, use a shielded inductor. See Table 1 for a suggested list of inductor suppliers.

Output Capacitor Selection

The bulk value of the output filter capacitor is set to reduce the ripple due to charge into the capacitor each cycle. The steady state ripple due to charge is given by:

$$\%\ RIPPLE_BOOST = \frac{I_{OUT(MAX)} \bullet (V_{OUT} - V_{IN(MIN)}) \bullet 100}{C_{OUT} \bullet V_{OUT}^2 \bullet f}\ \%$$

$$\%\ RIPPLE_BUCK = \frac{I_{OUT(MAX)} \bullet (V_{IN(MAX)} - V_{OUT}) \bullet 100}{C_{OUT} \bullet V_{IN(MAX)} \bullet V_{OUT} \bullet f}\ \%$$

where C_{OUT} = output filter capacitor in Farads and f = switching frequency in Hz.

Table 1. Inductor Vendor Information

SUPPLIER	PHONE	FAX	WEB SITE
Coilcraft	(847) 639-6400	(847) 639-1469	www.coilcraft.com
CoEv Magnetics	(800) 227-7040	(650) 361-2508	www.circuitprotection.com/magnetics.asp
Murata	(814) 237-1431 (800) 831-9172	(814) 238-0490	www.murata.com
Sumida	USA: (847) 956-0666 Japan: 81(3) 3607-5111	USA: (847) 956-0702 Japan: 81(3) 3607-5144	www.sumida.com
TDK	(847) 803-6100	(847) 803-6296	www.component.tdk.com
TOKO	(847) 297-0070	(847) 699-7864	www.tokoam.com

APPLICATIONS INFORMATION

The output capacitance is usually many times larger than the minimum value in order to handle the transient response requirements of the converter. For a rule of thumb, the ratio of the operating frequency to the unity-gain bandwidth of the converter is the amount the output capacitance will have to increase from the above calculations in order to maintain the desired transient response.

The other component of ripple is due to the ESR (equivalent series resistance) of the output capacitor. Low ESR capacitors should be used to minimize output voltage ripple. For surface mount applications, Taiyo Yuden or TDK ceramic capacitors, AVX TPS series tantalum capacitors or Sanyo POSCAP are recommended. See Table 2 for contact information.

Input Capacitor Selection

Since V_{IN} is the supply voltage for the IC, as well as the input to the power stage of the converter, it is recommended to place at least a 4.7µF, low ESR ceramic bypass capacitor close to the V_{IN} and SGND pins. It is also important to minimize any stray resistance from the converter to the battery or other power source.

Optional Schottky Diodes

The Schottky diodes across the synchronous switches B and D are not required (V_{OUT} < 4.3V), but provide a lower drop during the break-before-make time (typically 15ns) improving efficiency. Use a surface mount Schottky diode such as an MBRM120T3 or equivalent. Do not use ordinary rectifier diodes, since the slow recovery times will compromise efficiency. For applications with an output voltage above 4.3V, a Schottky diode is required from SW2 to V_{OUT}.

Output Voltage < 2.4V

The LTC3442 can operate as a buck converter with output voltages as low as 0.4V. The part is specified at 2.4V minimum to allow operation without the requirement of a Schottky diode. Synchronous switch D is powered from V_{OUT} and the $R_{DS(ON)}$ will increase at low output voltages, therefore a Schottky diode is required from SW2 to V_{OUT} to provide the conduction path to the output. Note that Burst Mode operation is inhibited at output voltages below 1.6V typical.

Output Voltage > 4.3V

A Schottky diode from SW2 to V_{OUT} is required for output voltages over 4.3V. The diode must be located as close to the pins as possible in order to reduce the peak voltage on SW2 due to the parasitic lead and trace inductance.

Input Voltage > 4.5V

For applications with input voltages above 4.5V which could exhibit an overload or short-circuit condition, a 2Ω/1nF series snubber is required between SW1 and GND. A Schottky diode from SW1 to V_{IN} should also be added as close to the pins as possible. For the higher input voltages, V_{IN} bypassing becomes more critical; therefore, a ceramic bypass capacitor as close to the V_{IN} and SGND pins as possible is also required.

Operating Frequency Selection

Higher operating frequencies allow the use of a smaller inductor and smaller input and output filter capacitors, thus reducing board area and component height. However, higher operating frequencies also increase the IC's total quiescent current due to the gate charge of the four switches, as given by:

Buck: $Iq = (0.8 \bullet V_{IN} \bullet f)$ mA

Boost: $Iq = [0.4 \bullet (V_{IN} + V_{OUT}) \bullet f]$ mA

Buck/Boost: $Iq = [f \bullet (1.2 \bullet V_{IN} + 0.4 \bullet V_{OUT})]$ mA

Table 2. Capacitor Vendor Information

SUPPLIER	PHONE	FAX	WEB SITE
AVX	(803) 448-9411	(803) 448-1943	www.avxcorp.com
Murata	(814) 237-1431 (800) 831-9172	(814) 238-0490	www.murata.com
Sanyo	(619) 661-6322	(619) 661-1055	www.sanyovideo.com
Taiyo Yuden	(408) 573-4150	(408) 573-4159	www.t-yuden.com
TDK	(847) 803-6100	(847) 803-6296	www.component.tdk.com

APPLICATIONS INFORMATION

where f = switching frequency in MHz. Therefore frequency selection is a compromise between the optimal efficiency and the smallest solution size.

Closing the Feedback Loop

The LTC3442 incorporates voltage mode PWM control. The control to output gain varies with operation region (buck, boost, buck/boost), but is usually no greater than 15. The output filter exhibits a double pole response, as given by:

$$f_{FILTER_POLE} = \frac{1}{2 \bullet \pi \bullet \sqrt{L \bullet C_{OUT}}} Hz$$

(in buck mode)

$$f_{FILTER_POLE} = \frac{V_{IN}}{2 \bullet V_{OUT} \bullet \pi \bullet \sqrt{L \bullet C_{OUT}}} Hz$$

(in boost mode)

where L is in henries and C_{OUT} is in farads.

The output filter zero is given by:

$$f_{FILTER_ZERO} = \frac{1}{2 \bullet \pi \bullet R_{ESR} \bullet C_{OUT}} Hz$$

where R_{ESR} is the equivalent series resistance of the output cap.

A troublesome feature in boost mode is the right-half plane zero (RHP), given by:

$$f_{RHPZ} = \frac{V_{IN}^{2}}{2 \bullet \pi \bullet I_{OUT} \bullet L \bullet V_{OUT}} Hz$$

The loop gain is typically rolled off before the RHP zero frequency.

A simple Type I compensation network can be incorporated to stabilize the loop, but at a cost of reduced bandwidth and slower transient response. To ensure proper phase margin using Type I compensation, the loop must be crossed over a decade before the LC double pole. The unity-gain frequency of the error amplifier with the Type I compensation is given by:

$$f_{UG} = \frac{1}{2 \bullet \pi \bullet R1 \bullet C_{P1}} Hz$$

referring to Figure 7.

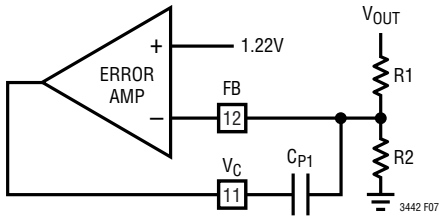

Figure 7. Error Amplifier with Type I Compensation

Most applications demand an improved transient response to allow a smaller output filter capacitor. To achieve a higher bandwidth, Type III compensation is required, providing two zeros to compensate for the double-pole response of the output filter. Referring to Figure 8, the location of the poles and zeros are given by:

$$f_{POLE1} \cong \frac{1}{2 \bullet \pi \bullet 32e^{3} \bullet R1 \bullet CP1} Hz$$

(which is extremely close to DC)

$$f_{ZERO1} = \frac{1}{2 \bullet \pi \bullet R_Z \bullet C_{P1}} Hz$$

$$f_{ZERO2} = \frac{1}{2 \bullet \pi \bullet R1 \bullet C_{Z1}} Hz$$

$$f_{POLE2} = \frac{1}{2 \bullet \pi \bullet R_Z \bullet C_{P2}} Hz$$

where resistance is in ohms and capacitance is in farads.

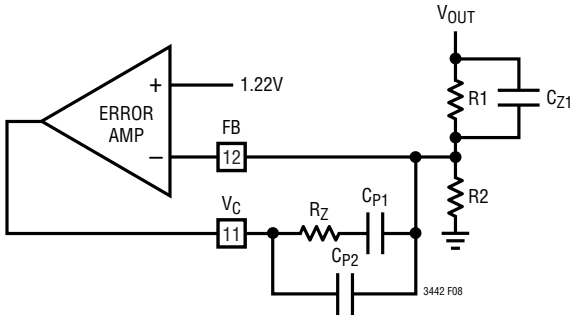

Figure 8. Error Amplifier with Type III Compensation

TYPICAL APPLICATIONS

1MHz Li-Ion to 3.3V at 1.2A Converter with Manual Mode Control (and Peak Current Limit Only)

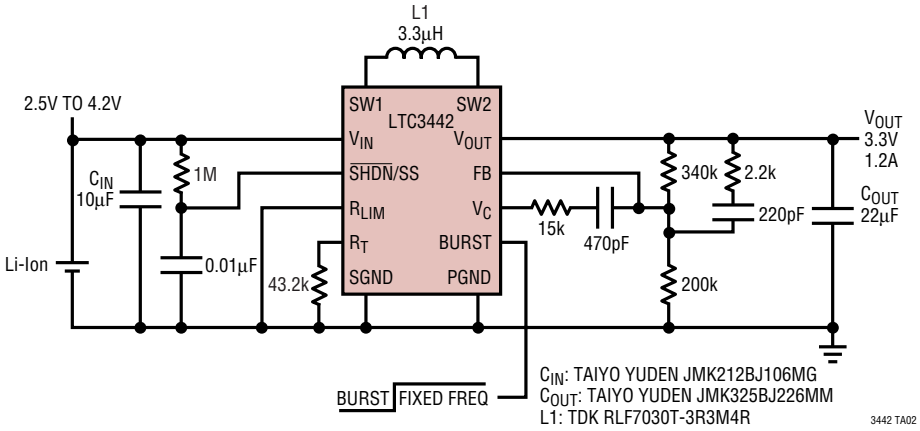

Multi-Input 3.3V at 600mA Boost Converter for Portable Applications with Automatic Burst Mode Operation and Average Input Current Limit for USB Powered Devices

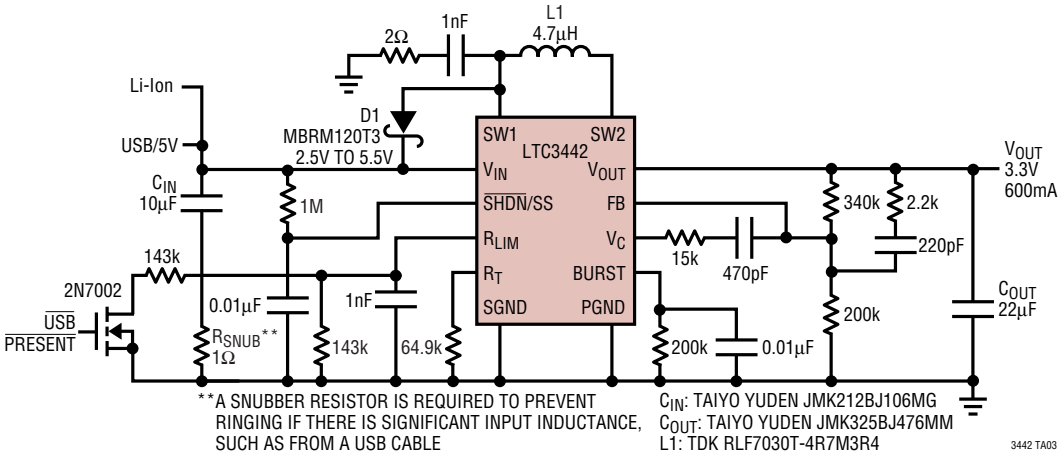

TYPICAL APPLICATIONS

High Efficiency Li-Ion Powered Constant Current LED Driver with Open-LED Protection

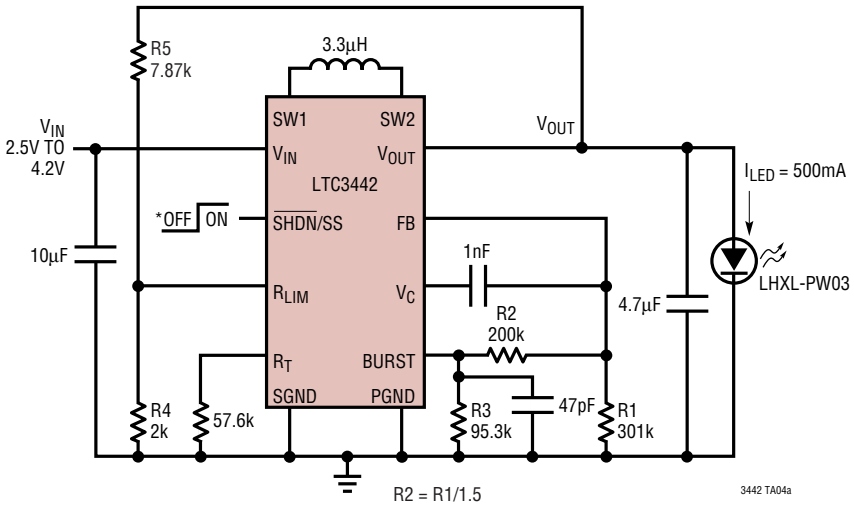

OPEN LED VOLTAGE LIMIT = (R4+R5)*0.95/R4

R2 = R1/1.5

I_{LED} = 24 • (R1+R2+R3)/(R1 • R3) AMPS

* NOTE: THE $\overline{SHDN}$/SS VOLTAGE MUST BE NO MORE THAN 0.5V BELOW V_{IN} WHEN ENABLED.

LED Driver Efficiency vs LED Current

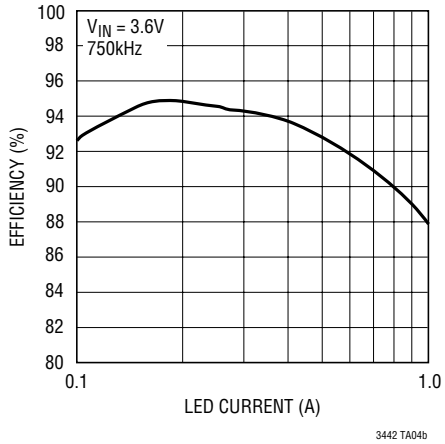

TYPICAL APPLICATIONS

High Current LED Driver with Low/High Current Range for Pulsed Applications; LED Current is 0.5A with 1.5A Pulse

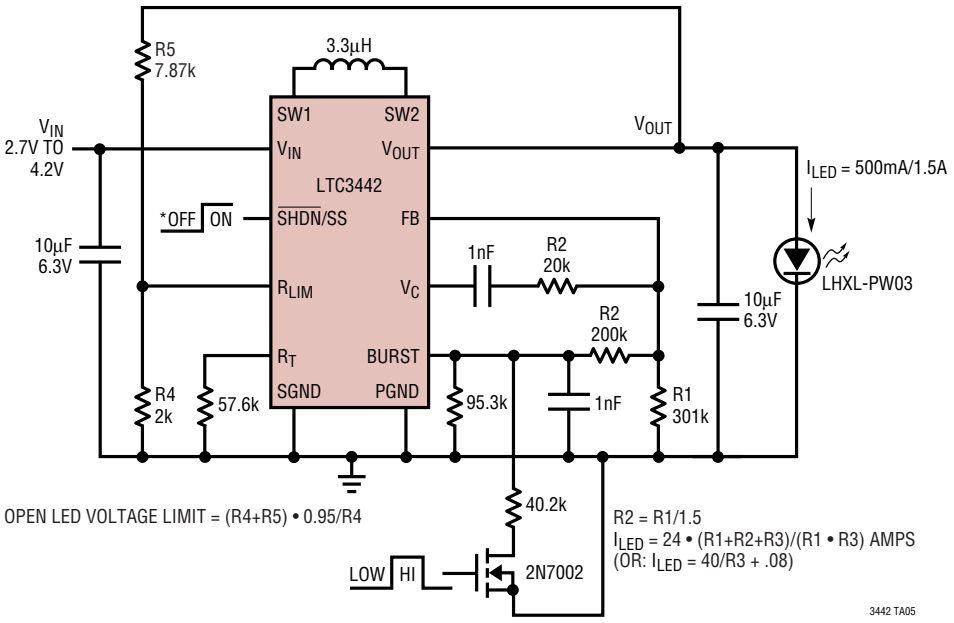

* NOTE: THE $\overline{SHDN}$/SS VOLTAGE MUST BE NO MORE THAN 0.5V BELOW V_{IN} WHEN ENABLED.

PACKAGE DESCRIPTION

UE/DE Package
12-Lead Plastic DFN (4mm × 3mm)
(Reference LTC DWG # 05-08-1695)

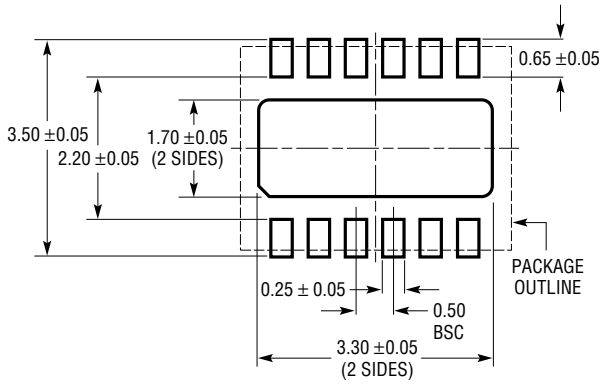

RECOMMENDED SOLDER PAD PITCH AND DIMENSIONS

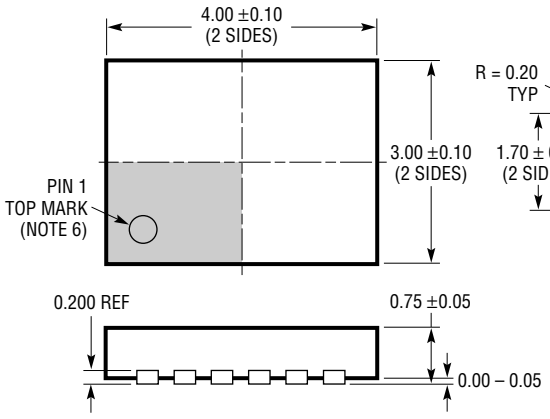

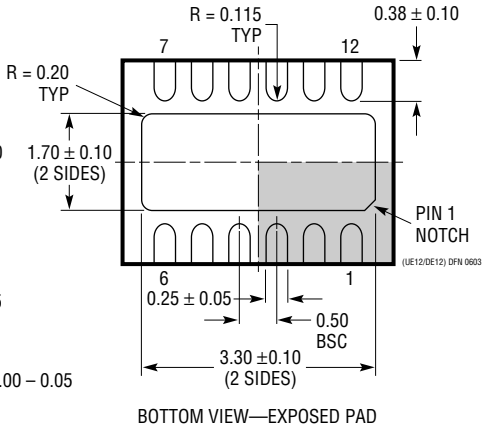

BOTTOM VIEW—EXPOSED PAD

NOTE:
1. DRAWING PROPOSED TO BE A VARIATION OF VERSION (WGED) IN JEDEC PACKAGE OUTLINE M0-229
2. DRAWING NOT TO SCALE
3. ALL DIMENSIONS ARE IN MILLIMETERS
4. DIMENSIONS OF EXPOSED PAD ON BOTTOM OF PACKAGE DO NOT INCLUDE MOLD FLASH. MOLD FLASH, IF PRESENT, SHALL NOT EXCEED 0.15mm ON ANY SIDE
5. EXPOSED PAD SHALL BE SOLDER PLATED
6. SHADED AREA IS ONLY A REFERENCE FOR PIN 1 LOCATION ON THE TOP AND BOTTOM OF PACKAGE

Information furnished by Linear Technology Corporation is believed to be accurate and reliable. However, no responsibility is assumed for its use. Linear Technology Corporation makes no representation that the interconnection of its circuits as described herein will not infringe on existing patent rights.

RELATED PARTS

PART NUMBER	DESCRIPTION	COMMENTS
LT®1613	550mA (I_{SW}), 1.4MHz, High Efficiency Step-Up DC/DC Converter	V_{IN}: 0.9V to 10V, $V_{OUT(MAX)}$ = 34V, I_Q = 3mA, I_{SD} < 1µA, ThinSOT™ Package
LT1618	1.5A (I_{SW}), 1.25MHz, High Efficiency Step-Up DC/DC Converter	V_{IN}: 1.6V to 18V, $V_{OUT(MAX)}$ = 35V, I_Q = 1.8mA, I_{SD} < 1µA, MS10 Package
LT1930/LT1930A	1A (I_{SW}), 1.2MHz/2.2MHz, High Efficiency Step-Up DC/DC Converter	V_{IN}: 2.6V to 16V, $V_{OUT(MAX)}$ = 34V, I_Q = 4.2mA/5.5mA, I_{SD} < 1µA, ThinSOT Package
LT1935	2A (I_{SW}), 1.2MHz, 38V Step-Up DC/DC Converter	V_{IN}: 2.3V to 16V, $V_{OUT(MAX)}$ = 38V, I_Q = 3mA, I_{SD} < 1µA, ThinSOT Package
LT1946/LT1946A	1.5A (I_{SW}), 1.2MHz/2.7MHz, High Efficiency Step-Up DC/DC Converter	V_{IN}: 2.45V to 16V, $V_{OUT(MAX)}$ = 34V, I_Q = 3.2mA, I_{SD} < 1µA, MS8 Package
LT1961	1.5A (I_{SW}), 1.25MHz, High Efficiency Step-Up DC/DC Converter	V_{IN}: 3V to 25V, $V_{OUT(MAX)}$ = 35V, I_Q = 0.9mA, I_{SD} = 6µA, MS8E Package
LTC3400/LTC3400B	600mA (I_{SW}), 1.2MHz Synchronous Step-Up DC/DC Converter	V_{IN}: 0.85V to 5V, $V_{OUT(MAX)}$ = 5V, I_Q = 19µA/300µA, I_{SD} < 1µA, ThinSOT Package
LTC3401/LTC3402	1A/2A (I_{SW}), 3MHz Synchronous Step-Up DC/DC Converter	V_{IN}: 0.5V to 5V, $V_{OUT(MAX)}$ = 6V, I_Q = 38µA, I_{SD} < 1µA, MS Package
LTC3405/LTC3405A	300mA (I_{OUT}), 1.5MHz Synchronous Step-Down DC/DC Converter	V_{IN}: 2.7V to 6V, $V_{OUT(MIN)}$ = 0.8V, I_Q = 20µA, I_{SD} ≤ 1µA, MS10 Package
LTC3406/LTC3406B	600mA (I_{OUT}), 1.5MHz Synchronous Step-Down DC/DC Converter	V_{IN}: 2.5V to 5.5V, $V_{OUT(MIN)}$ = 0.6V, I_Q = 20µA, I_{SD} ≤ 1µA, ThinSOT Package
LTC3407	600mA (I_{OUT}), 1.5MHz Dual Synchronous Step-Down DC/DC Converter	V_{IN}: 2.5V to 5.5V, $V_{OUT(MIN)}$ = 0.6V, I_Q = 40µA, I_{SD} ≤ 1µA, MS Package
LTC3411	1.25A (I_{OUT}), 4MHz Synchronous Step-Down DC/DC Converter	V_{IN}: 2.5V to 5.5V, $V_{OUT(MIN)}$ = 0.8V, I_Q = 60µA, I_{SD} ≤ 1µA, MS Package
LTC3412	2.5A (I_{OUT}), 4MHz Synchronous Step-Down DC/DC Converter	V_{IN}: 2.5V to 5.5V, $V_{OUT(MIN)}$ = 0.8V, I_Q = 60µA, I_{SD} ≤ 1µA, TSSOP16E Package
LTC3421	3A (I_{SW}), 3MHz Synchronous Step-Up DC/DC Converter	V_{IN}: 0.5V to 4.5V, $V_{OUT(MAX)}$ = 5.25V, I_Q = 12µA, I_{SD} < 1µA, QFN Package
LTC3425	5A (I_{SW}), 8MHz Multiphase Synchronous Step-Up DC/DC Converter	V_{IN}: 0.5V to 4.5V, $V_{OUT(MAX)}$ = 5.25V, I_Q = 12µA, I_{SD} < 1µA, QFN Package
LTC3429	600mA (I_{SW}), 500kHz Synchronous Step-Up DC/DC Converter	V_{IN}: 0.5V to 4.4V, $V_{OUT(MIN)}$ = 5V, I_Q = 20µA, I_{SD} < 1µA, QFN Package
LTC3436	3A (I_{SW}), 1MHz, 34V Step-Up DC/DC Converter	V_{IN}: 3V to 25V, $V_{OUT(MAX)}$ = 34V, I_Q = 0.9mA, I_{SD} < 6µA, TSSOP-16E Package
LTC3440	600mA (I_{OUT}), 2MHz Synchronous Buck-Boost DC/DC Converter	V_{IN}: 2.5V to 5.5V, $V_{OUT(MIN)}$ = 5.5V, I_Q = 25µA, I_{SD} < 1µA, MS, DFN Packages
LTC3441	600mA (I_{OUT}), 2MHz Synchronous Buck-Boost DC/DC Converter	V_{IN}: 2.5V to 5.5V, $V_{OUT(MIN)}$ = 5.5V, I_Q = 25µA, I_{SD} < 1µA, DFN Package
LTC3443	1.2A (I_{OUT}), 600kHz Synchronous Buck-Boost DC/DC Converter	V_{IN}: 2.4V to 5.5V, $V_{OUT(MIN)}$ = 5.25V, I_Q = 28µA, I_{SD} < 1µA, MS Package
LT3467	1.1A (I_{SW}), 1.3MHz, High Efficiency Step-Up DC/DC Converter	V_{IN}: 2.6V to 16V, $V_{OUT(MAX)}$ = 40V, I_Q = 1.2mA, I_{SD} < 1µA, ThinSOT Package

ThinSOT is a trademark of Linear Technology Corporation.

20 Linear Technology Corporation
1630 McCarthy Blvd., Milpitas, CA 95035-7417
(408) 432-1900 • FAX: (408) 434-0507 • www.linear.com

LT 0306 REV A • PRINTED IN USA

© LINEAR TECHNOLOGY CORPORATION 2004