1.2MHz Step-Up DC/DC Converter in SOT-23

FEATURES

- **Internal 2A MOSFET Switch**
- **1.2MHz Switching Frequency**
- **Integrated Soft-Start**
- **Low 1.6V V_{IN} Operation**
- Low $R_{DS(ON)}$ Switch: 100mΩ at 5V Output
- Delivers 5V at 800mA from a 3.3V Input
- Delivers 3.3V at 800mA from a 2.5V Input
- Uses Small, Low Profile External Components
- Low Profile (1mm) SOT-23 (ThinSOT™) Package

APPLICATIONS

- White LED Driver Supply
- Local 3.3V or 5V Supply
- Battery Back-Up

DESCRIPTION

The LTC®3426 step-up switching regulator generates an output voltage of up to 5.5V from an input voltage as low as 1.6V. Ideal for applications where space is limited, it switches at 1.2MHz, allowing the use of tiny, low cost and low profile external components. Its internal 2A, 100mΩ NMOS switch provides high efficiency even at heavy load, while the constant frequency, current mode architecture results in low, predictable output noise that is easy to filter.

Antiringing circuitry reduces EMI concerns by damping the inductor while in discontinuous mode, and internal soft-start eases inrush current worries. Internal frequency compensation is designed to accommodate ceramic output capacitors, further reducing noise. The device features very low shutdown current of 0.5µA.

The LTC3426 is available in the 6-lead SOT-23 package.

LT, LTC and LTM are registered trademarks and ThinSOT is a trademark of Analog Devices, Inc. All other trademarks are the property of their respective owners. Protected by U.S. Patents including 6498466, 6611131.

TYPICAL APPLICATION

3.3V to 5V Boost Converter

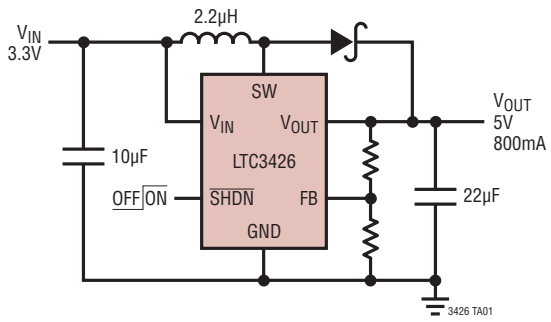

Efficiency

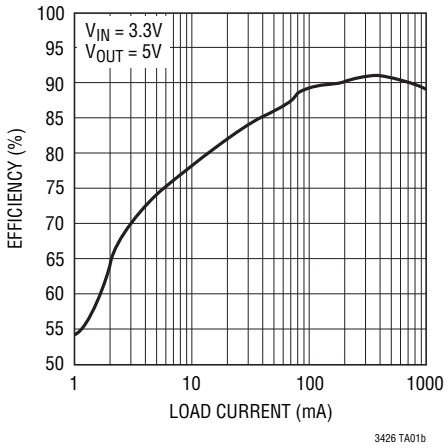

ABSOLUTE MAXIMUM RATINGS

(Note 1)

V_{IN} Voltage ..... –0.3V to 6V
SW Voltage ..... –0.3V to 6V
$\overline{SHDN}$, FB Voltage ..... –0.3V to 6V
V_{OUT} ..... –0.3V to 6V
Operating Temperature Range (Note 2)... –40°C to 85°C
Storage Temperature Range.....–65°C to 125°C
Lead Temperature (Soldering, 10 sec) ..... 300°C

PACKAGE/ORDER INFORMATION

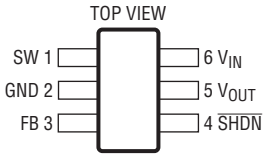

S6 PACKAGE
6-LEAD PLASTIC TSOT-23
T_{JMAX} = 125°C, θ_{JA} = 165°C/W, θ_{JC} = 102°C/W

ORDER INFORMATION

http://www.linear.com/product/LTC3426#orderinfo

LEAD FREE FINISH	TAPE AND REEL	PART MARKING	PACKAGE DESCRIPTION	TEMPERATURE RANGE
LTC3426ES6#PBF	LTC3426ES6#TRPBF	LTAJT	6-Lead Plastic TSOT-23	–40°C to 85°C

Consult LTC Marketing for parts specified with wider operating temperature ranges.

For more information on lead free part marking, go to: http://www.linear.com/leadfree/

For more information on tape and reel specifications, go to: http://www.linear.com/tapeandreel/. Some packages are available in 500 unit reels through designated sales channels with #TRMPBF suffix.

CONVERTER CHARACTERISTICS

The ● denotes the specifications which apply over the full operating temperature range, otherwise specifications are at T_A = 25°C. V_{IN} = 1.8V, V_{OUT} = 3.3V, unless otherwise specified.

PARAMETER	CONDITIONS		MIN	TYP	MAX	UNITS
Input Voltage Range	$\overline{SHDN}$ = V_{IN}		1.6			V
Output Voltage Adjust Range			2.25		5	V
Feedback Voltage		●	1.173	1.22	1.247	V
Feedback Input Current	V_{FB} = 1.23V				0.1	µA
Quiescent Current (Shutdown)	$V_{\overline{SHDN}}$ = 0V, Not Including Switch Leakage				1	µA
Quiescent Current	$\overline{SHDN}$ = V_{IN}, Not Switching			600	1000	µA
Switch Leakage	V_{SW} = 5V			0.2	10	µA
Switch On Resistance	V_{OUT} = 3.3V V_{OUT} = 5V			0.11 0.10		Ω Ω
Current Limit		●	2	2.3		A
Maximum Duty Cycle	V_{FB} = 1.15V		80	85		%
Switching Frequency		●	0.85	1.2	1.5	MHz
$\overline{SHDN}$ Input High			1			V
$\overline{SHDN}$ Input Low					0.4	V
$\overline{SHDN}$ Input Current	$\overline{SHDN}$ = 5.5V				1	µA

Note 1: Stresses beyond those listed under Absolute Maximum Ratings may cause permanent damage to the device. Exposure to any Absolute Maximum Rating condition for extended periods may affect device reliability and lifetime.

Note 2: The LTC3426 is guaranteed to meet performance specifications from 0°C to 85°C. Specifications over the –40°C to 85°C operating temperature are assured by design, characterization and correlation with statistical process controls.

Note 3: This IC includes overtemperature protection that is intended to protect the device during momentary overload conditions. Junction temperature will exceed 125°C when overtemperature protection is active. Continuous operation above the specified maximum operating junction temperature may impair device reliability.

TYPICAL PERFORMANCE CHARACTERISTICS

Oscillator Frequency vs Temperature

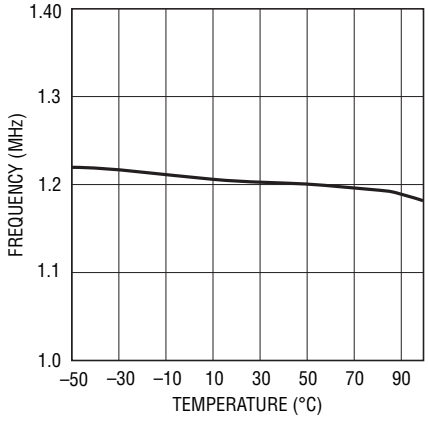

Efficiency vs V_{IN}

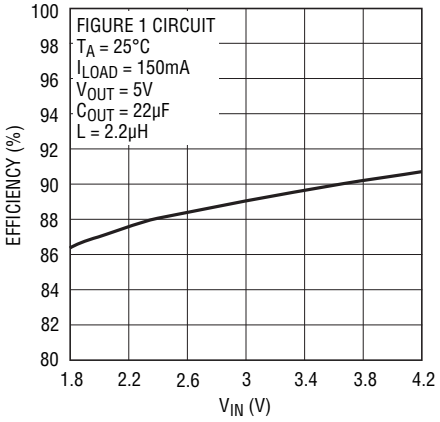

$I_{OUT(MAX)}$ vs V_{IN}

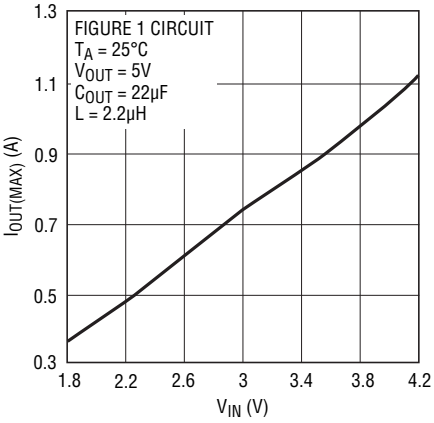

$R_{DS(ON)}$ vs Temperature

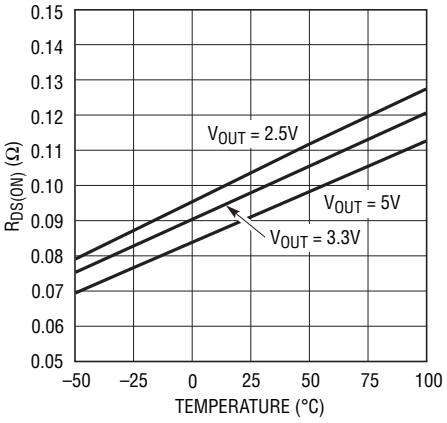

FB Pin Voltage

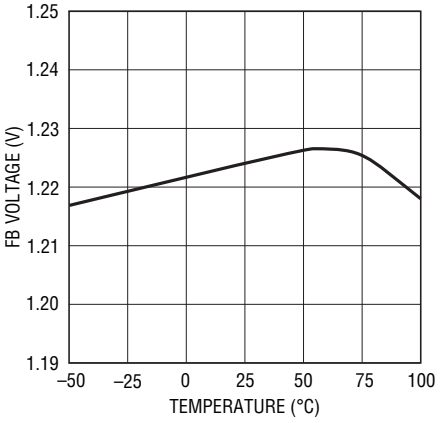

Switching Waveforms

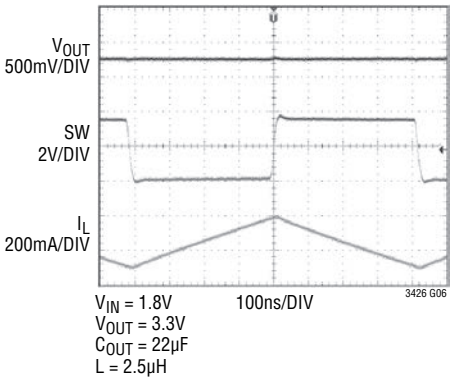

SW Pin Antiringing Operation

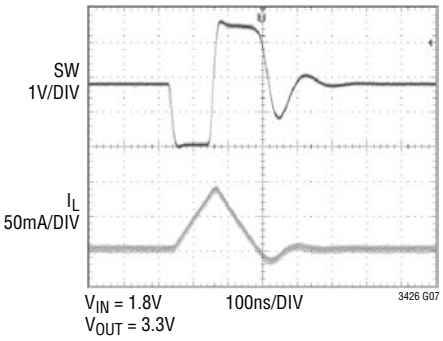

V_{OUT} Transient Response

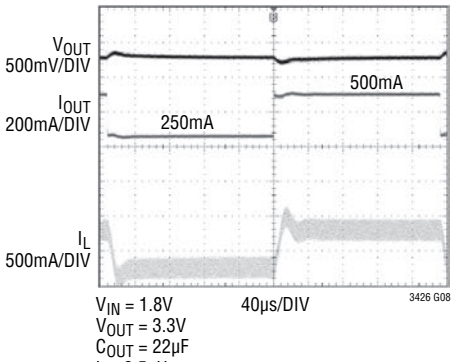

PIN FUNCTIONS

SW (Pin 1): Switch Pin. Connect inductor between SW and V_{IN}. A Schottky diode is connected between SW and V_{OUT}. Keep these PCB trace lengths as short and wide as possible to reduce EMI and voltage overshoot. If the inductor current falls to zero, an internal 100Ω antiringing switch is connected from SW to V_{IN} to minimize EMI.

GND (Pin 2): Signal and Power Ground. Provide a short direct PCB path between GND and the (–) side of the output capacitor(s).

FB (Pin 3): Feedback Input to the g_m Error Amplifier. Connect resistor divider tap to this pin. The output voltage can be adjusted from 2.5V to 5V by:

$$V_{OUT} = 1.22 \bullet \left(1 + \frac{R1}{R2}\right)$$

$\overline{SHDN}$ (Pin 4): Logic Controlled Shutdown Input.

$\overline{SHDN}$ = High: Normal free running operation

$\overline{SHDN}$ = Low: Shutdown, quiescent current < 1µA

Typically, $\overline{SHDN}$ should be connected to V_{IN} through a 1M pull-up resistor.

V_{OUT} (Pin 5): Output Voltage Sense Input. The NMOS switch gate drive is derived from the greater of V_{OUT} and V_{IN}.

V_{IN} (Pin 6): Input Supply. Must be locally bypassed.

BLOCK DIAGRAM

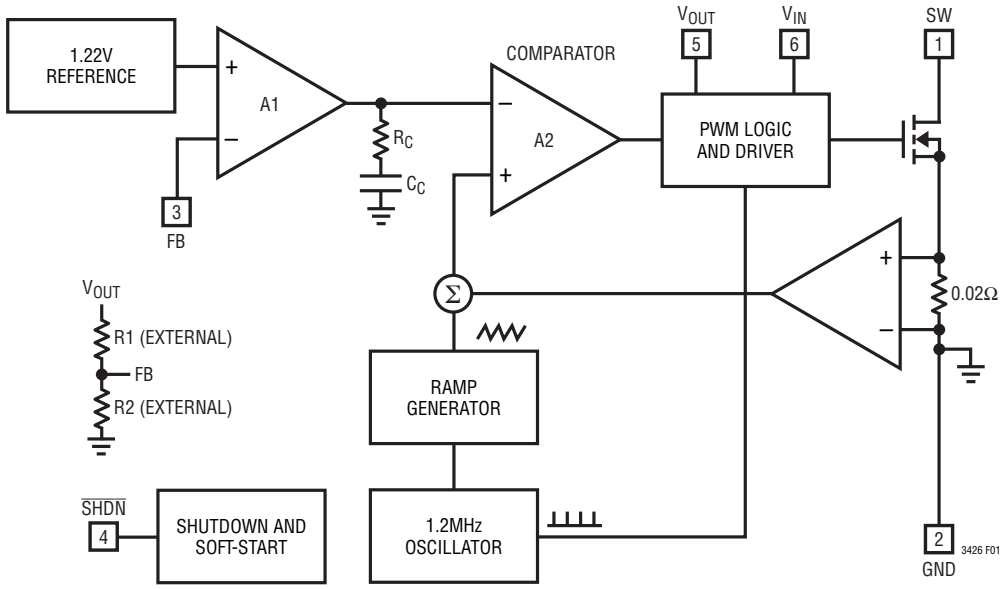

OPERATION

The LTC3426 is a monolithic 1.2MHz boost converter housed in a 6-lead SOT-23 package. The device features fixed frequency, current mode PWM control for excellent line and load regulation. The low $R_{DS(ON)}$ NMOS switch enables the device to maintain high efficiency over a wide range of load current. Operation of the feedback loop which sets the peak inductor current to keep the output in regulation can be best understood by referring to the Block Diagram in Figure 1. At the start of each clock cycle a latch in the PWM logic is set and the NMOS switch is turned on. The sum of a voltage proportional to the switch current and a slope compensating voltage ramp is fed to the positive input to the PWM comparator. When this voltage exceeds either a voltage proportional to the 2A current limit or the PWM control voltage, the latch in the PWM logic is reset and NMOS switch is turned off. The PWM control voltage at the output of the error amplifier is the amplified and compensated difference between the feedback voltage on the FB pin and the internal reference voltage of 1.22V. If the control voltage increases, more current is delivered to the output. When the control voltage exceeds the I_{LIMIT} reference voltage, the peak current is limited to a minimum of 2A. The current limit helps protect the LTC3426 internal switch and external components connected to it. If the control voltage decreases, less current is delivered to the output. During load transients control voltage may decrease to the point where no switching occurs until the feedback voltage drops below the reference. The LTC3426 has an integrated soft-start feature which slowly ramps up the feedback control node from 0V. The soft-start is initiated when $\overline{SHDN}$ is pulled high.

APPLICATIONS INFORMATION

Setting the Output Voltage

The output voltage, V_{OUT}, is set by a resistive divider from V_{OUT} to ground. The divider tap is tied to the FB pin. V_{OUT} is set by the formula:

$$V_{OUT} = 1.22 \bullet \left(1 + \frac{R1}{R2}\right)$$

Inductor Selection

The LTC3426 can utilize small surface mount inductors due to its 1.2MHz switching frequency. A 1.5µH or 2.2µH inductor will be the best choice for most LTC3426 applications. Larger values of inductance will allow greater output current capability by reducing the inductor ripple current. Increasing the inductance above 3.3µH will increase component size while providing little improvement in output current capability. The inductor current ripple is typically set for 20% to 40% of the maximum inductor current (I_P). High frequency ferrite core inductor materials reduce frequency dependent power losses compared to cheaper powdered iron types, improving efficiency. The inductor should have low DCR (DC resistance) to reduce the I^2R power losses, and must be able to handle the peak inductor current without saturating.

Several inductor manufacturers are listed in Table 1.

Table 1. Inductor Manufacturers

TDK	www.tdk.com
Sumida	www.sumida.com
Murata	www.murata.com

Output and Input Capacitor Selection

Low ESR (equivalent series resistance) capacitors should be used to minimize the output voltage ripple. Multilayer ceramic capacitors are an excellent choice as they have extremely low ESR and are available in small footprints. A 15µF to 30µF output capacitor is sufficient for most applications. X5R and X7R dielectric materials are preferred for their ability to maintain capacitance over wide voltage and temperature ranges.

Low ESR input capacitors reduce input switching noise and reduce the peak current drawn from the input supply. It follows that ceramic capacitors are also a good choice for input decoupling and should be located as close as

APPLICATIONS INFORMATION

possible to the device. A 10µF input capacitor is sufficient for most applications. Table 2 shows a list of several ceramic capacitor manufacturers. Consult the manufacturers for detailed information in their entire selection of ceramic parts.

Table 2. Ceramic Capacitor Manufacturers

Taiyo Yuden	www.t-yuden.com
Murata	www.murata.com
TDK	www.component.tdk.com

Diode Selection

A Schottky diode is recommended for use with the LTC3426. Use of a low forward voltage diode such as the ON Semiconductor MBRA210LT3 is recommended. A Schottky diode rated at 2A is recommended for use with the LTC3426.

PCB Layout Guidelines

The high speed operation of the LTC3426 demands careful attention to board layout. You will not get advertised performance with careless layout. Figure 2 shows the recommended component placement. A large ground pin copper area will help to lower the chip temperature.

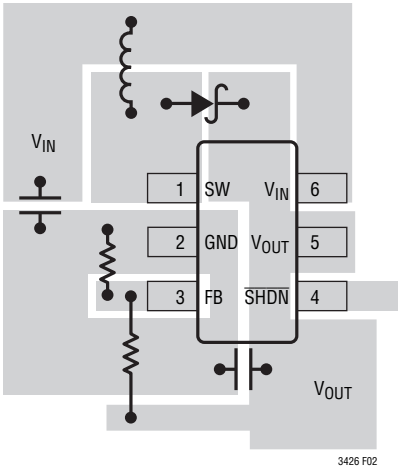

Figure 2. Recommended Component Placement for Single Layer Board

TYPICAL APPLICATIONS

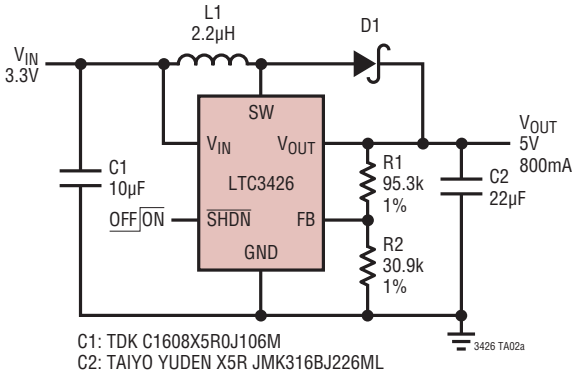

C1: TDK C1608X5R0J106M
C2: TAIYO YUDEN X5R JMK316BJ226ML
D1: ON SEMICONDUCTOR MBRA210LT3
L1: COILCRAFT D03316P-222

Efficiency

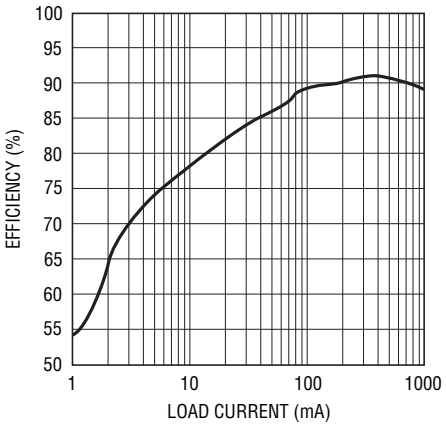

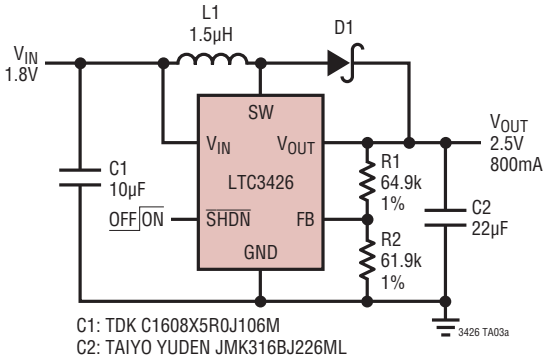

C1: TDK C1608X5R0J106M
C2: TAIYO YUDEN JMK316BJ226ML
D1: ON SEMICONDUCTOR MBRM120LT3
L1: TDK RLF7030T-1R5N6R1

Efficiency

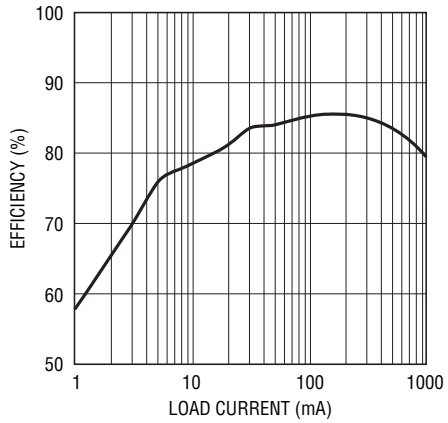

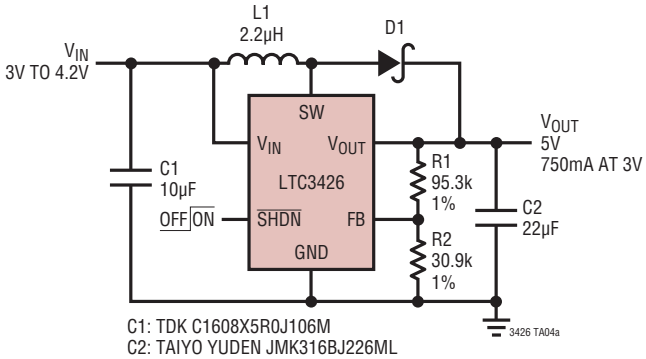

C1: TDK C1608X5R0J106M
C2: TAIYO YUDEN JMK316BJ226ML
D1: ON SEMICONDUCTOR MBR120VLSFT1
L1: SUMIDA CDRH4D28-2R2 2

Efficiency

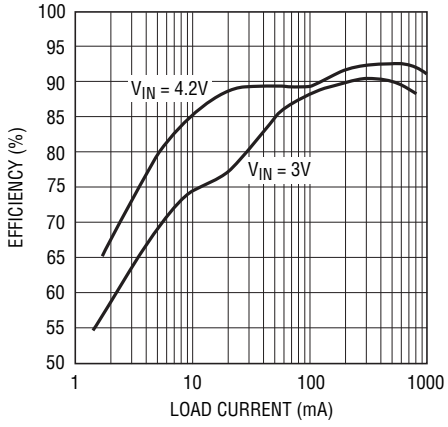

TYPICAL APPLICATIONS

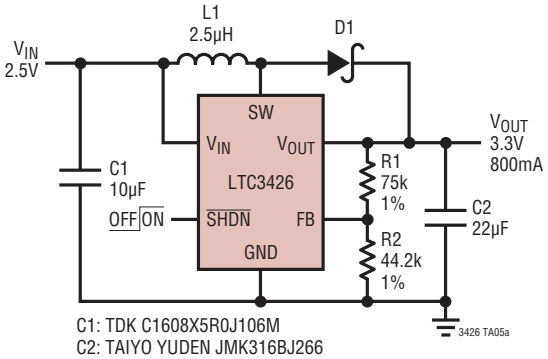

C1: TDK C1608X5R0J106M
C2: TAIYO YUDEN JMK316BJ266
D1: ON SEMICONDUCTOR MBRM120LT3
L1: SUMIDA CDRH5D28-2R5 2

Efficiency

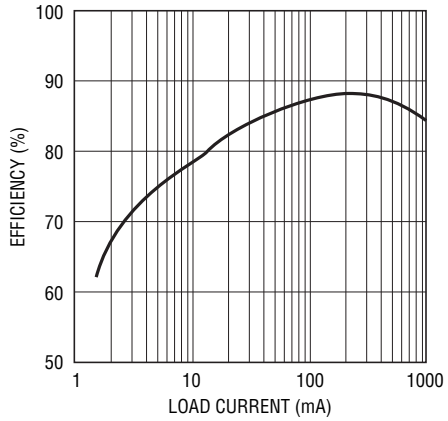

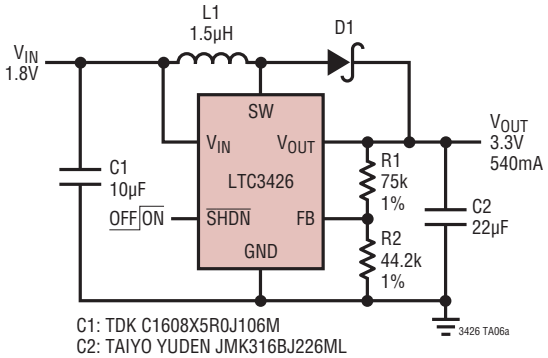

C1: TDK C1608X5R0J106M
C2: TAIYO YUDEN JMK316BJ226ML
D1: ON SEMICONDUCTOR MBRM120LT3
L1: TDK RLF7030T-1R5N6R1

Efficiency

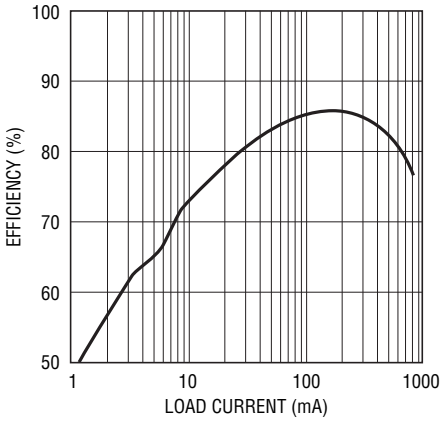

TYPICAL APPLICATIONS

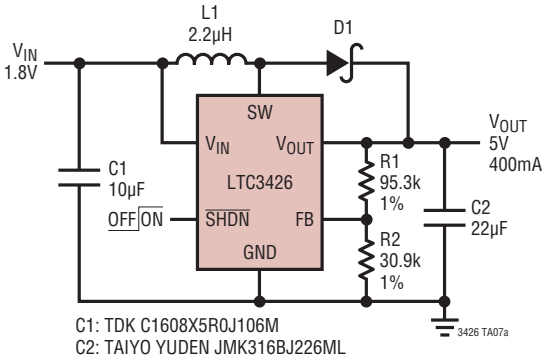

C1: TDK C1608X5R0J106M
C2: TAIYO YUDEN JMK316BJ226ML
D1: ON SEMICONDUCTOR MBR120VLSFT1
L1: SUMIDA CDRH4D28-2R2 2

Efficiency

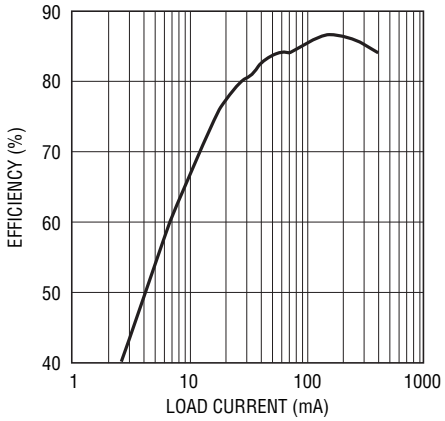

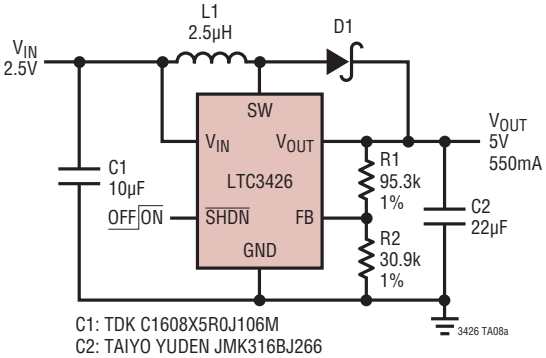

C1: TDK C1608X5R0J106M
C2: TAIYO YUDEN JMK316BJ266
D1: ON SEMICONDUCTOR MBRM120LT3
L1: SUMIDA CDRH5D28-2R5

Efficiency

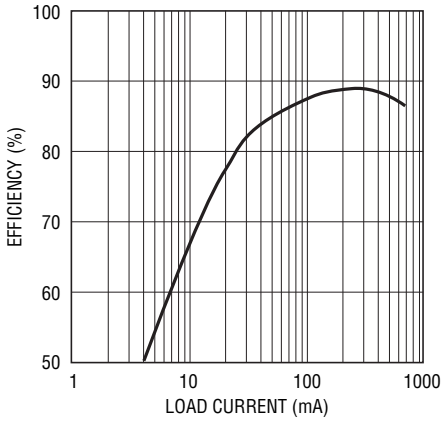

PACKAGE DESCRIPTION

Please refer to http://www.linear.com/product/LTC3426#packaging for the most recent package drawings.

S6 Package
6-Lead Plastic TSOT-23
(Reference LTC DWG # 05-08-1636)

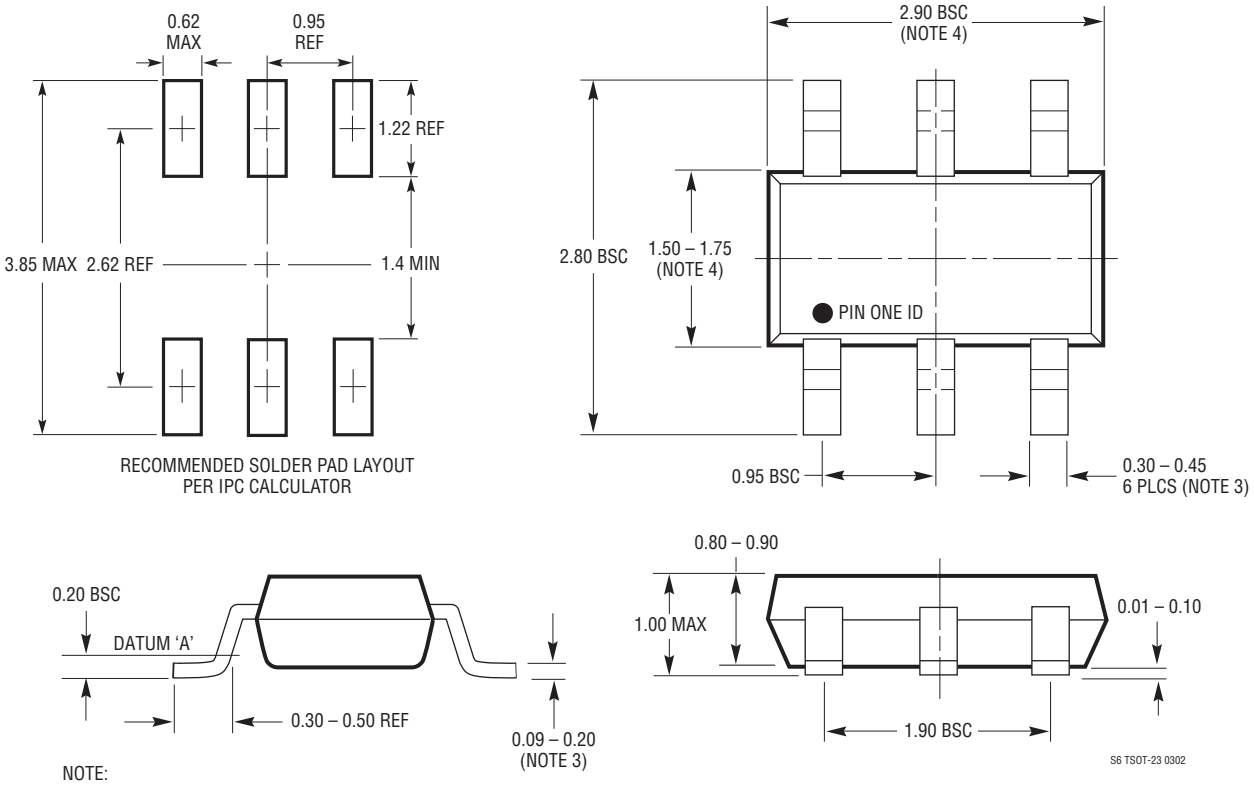

NOTE:
1. DIMENSIONS ARE IN MILLIMETERS
2. DRAWING NOT TO SCALE
3. DIMENSIONS ARE INCLUSIVE OF PLATING
4. DIMENSIONS ARE EXCLUSIVE OF MOLD FLASH AND METAL BURR
5. MOLD FLASH SHALL NOT EXCEED 0.254mm
6. JEDEC PACKAGE REFERENCE IS MO-193

REVISION HISTORY (Revision history begins at Rev B)

REV	DATE	DESCRIPTION	PAGE NUMBER
B	06/17	Changed C1 to TDK C1068X5R0J106M	7, 8, 9, 10

Information furnished by Linear Technology Corporation is believed to be accurate and reliable. However, no responsibility is assumed for its use. Linear Technology Corporation makes no representation that the interconnection of its circuits as described herein will not infringe on existing patent rights.

RELATED PARTS

PART NUMBER	DESCRIPTION	COMMENTS
LT1613	550mA (I_{SW}), 1.4MHz, High Efficiency Step-Up DC/DC Converter	90% Efficiency, V_{IN}: 0.9V to 10V, $V_{OUT(MAX)}$ = 34V, I_Q = 3mA, I_{SD} < 1µA, ThinSOT
LT1946/LT1946A	1.5A (I_{SW}), 1.2MHz/2.7MHz, High Efficiency Step-Up DC/DC Converter	High Efficiency, V_{IN}: 2.45V to 16V, $V_{OUT(MAX)}$ = 34V, I_Q = 3.2mA, I_{SD} < 1µA, MS8
LTC3400/LTC3400B	600mA (I_{SW}), 1.2MHz, Synchronous Step-Up DC/DC Converter	92% Efficiency, V_{IN}: 0.5V to 5V, $V_{OUT(MAX)}$ = 5V, I_Q = 19µA/300µA, I_{SD} < 1µA, ThinSOT
LTC3401/LTC3402	1A/2A (I_{SW}), 3MHz, Synchronous Step-Up DC/DC Converter	97% Efficiency, V_{IN}: 0.5V to 5V, $V_{OUT(MAX)}$ = 5.5V, I_Q = 38µA, I_{SD} < 1µA, MS10
LTC3421	3A (I_{SW}), 3MHz, Synchronous Step-Up DC/DC Converter with Output Disconnect	95% Efficiency, V_{IN}: 0.5V to 4.5V, $V_{OUT(MAX)}$ = 5.25V, I_Q = 12µA, I_{SD} < 1µA, QFN24
LTC3425	5A (I_{SW}), 8MHz, 4-Phase Synchronous Step-Up DC/DC Converter with Output Disconnect	95% Efficiency, V_{IN}: 0.5V to 4.5V, $V_{OUT(MAX)}$ = 5.25V, I_Q = 12µA, I_{SD} < 1µA, QFN32
LTC3429	600mA (I_{SW}), 550kHz, Synchronous Step-Up DC/DC Converter with Soft-Start/Output Disconnect	90% Efficiency, V_{IN}: 0.5V to 4.3V, $V_{OUT(MAX)}$ = 5V, I_Q = 20µA, I_{SD} < 1µA, ThinSOT
LTC3436	3A (I_{SW}), 1MHz, High Efficiency Step-Up DC/DC Converter	V_{IN}: 3V to 25V, $V_{OUT(MAX)}$ = 34V, I_Q = 0.9mA, I_{SD} < 6µA, TSSOP16E
LTC3459	75mA (I_{SW}), 10V Micropower Synchronous Boost Converter in ThinSOT	V_{IN}: 1.5V to 5.5V, $V_{OUT(MAX)}$ = 10V, I_Q = 10µA, I_{SD} < 1µA, ThinSOT
LTC3464	85mA (I_{SW}), High Efficiency Step-Up DC/DC Converter with Schottky and PNP Disconnect	V_{IN}: 2.3V to 10V, $V_{OUT(MAX)}$ = 34V, I_Q = 25µA, I_{SD} < 1µA, ThinSOT

LINEAR TECHNOLOGY
NOW PART OF ANALOG DEVICES

LT 0617 REV B • PRINTED IN USA
www.linear.com/LTC3426
© LINEAR TECHNOLOGY CORPORATION 2004