2.5µA, 1% Accurate SOT-23 Comparator and Voltage Reference for Battery Monitoring

FEATURES

- **High Accuracy Trip Voltage: 1% Max Error Using External 1% Resistors**
- **Adjustable Threshold Voltage and Hysteresis**
- **Quiescent Current: 2.5µA Typ**
- Output Swings Rail-to-Rail
- Thresholds Programmable from 2.5V to 3.25V
- Output State Guaranteed for V_{BATT} ≥1.5V
- Low Profile (1mm) ThinSOT™ Package

APPLICATIONS

- Lithium-Ion Battery-Powered Equipment
  - PDAs
  - Cell Phones
  - Handheld Instruments
  - Battery Packs
  - Pagers
  - Palm Top Computers
  - POS Terminals

LT, LTC, LTM, Linear Technology and the Linear logo are registered trademarks of Linear Technology Corporation. ThinSOT is a trademark of Linear Technology Corporation. All other trademarks are the property of their respective owners.

DESCRIPTION

The LTC®1998 is a micropower comparator and a precision adjustable reference in a 6-pin SOT-23 package that is optimized for lithium-ion low battery detection circuits.

The LTC1998 features a voltage detection circuit with an adjustable threshold voltage and hysteresis. The threshold voltage can be programmed from 2.5V to 3.25V with two external resistors. A 10mV to 750mV hysteresis can be added with a third external resistor.

A proprietary internal architecture maintains 1% threshold voltage accuracy over temperature with low cost 1% external resistors.

A separate power supply pin, V_{LOGIC}, allows the battery-low logic output to operate below the battery voltage, allowing compatibility with low voltage microprocessors without a pull-up resistor. Power supply glitches are eliminated by preventing the cross-conducting current which occurs when the output changes state.

The LTC1998 operates with battery or supply voltages up to 5.5V and its battery-low output is valid for battery voltages above 1.5V.

BLOCK DIAGRAM

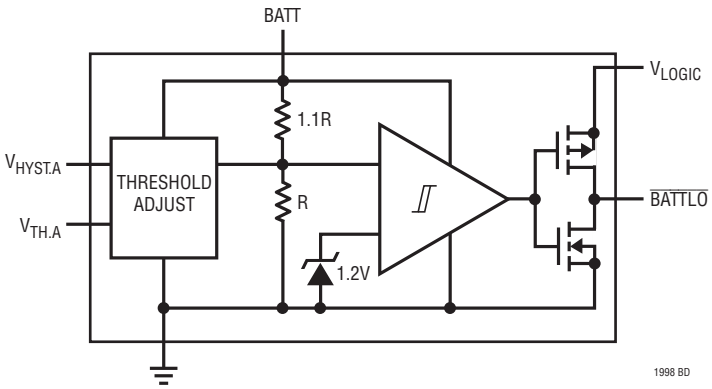

Threshold Voltage Error vs Temperature

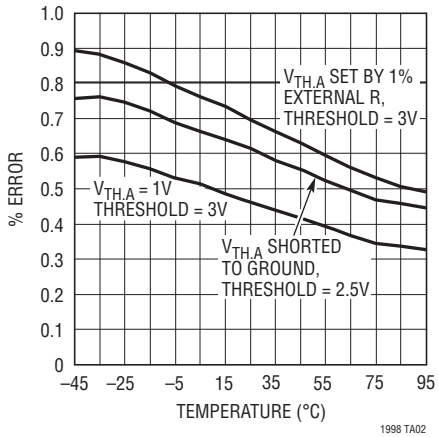

ABSOLUTE MAXIMUM RATINGS

(Note 1)

Total Supply Voltage (BATT or V_{LOGIC} to GND).....6V
Voltage
$V_{TH.A}$, $V_{H.A}$ ..... BATT + 0.3V to GND – 0.3V
$\overline{BATTLO}$.....V_{LOGIC} + 0.3V to GND – 0.3V
Operating Temperature Range (Note 3).... –40°C to 85°C
Specified Temperature Range (Note 4)
LTC1998C ..... –40°C to 85°C
LTC1998I..... –40°C to 85°C
Storage Temperature Range..... –65°C to 150°C
Lead Temperature (Soldering, 10 sec) ..... 300°C

PIN CONFIGURATION

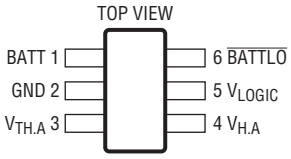

S6 PACKAGE
6-LEAD PLASTIC TSOT-23
T_{JMAX} = 150°C, θ_{JA} = 250°C/W

ORDER INFORMATION

LEAD FREE FINISH	TAPE AND REEL	PART MARKING	PACKAGE DESCRIPTION	SPECIFIED TEMPERATURE RANGE
LTC1998CS6#PBF	LTC1998CS6#TRPBF	LTTY	6-Lead Plastic TSOT-23	–40°C to 85°C
LTC1998IS6#PBF	LTC1998IS6#TRPBF	LTTY	6-Lead Plastic TSOT-23	–40°C to 85°C
LEAD BASED FINISH	**TAPE AND REEL**	**PART MARKING**	**PACKAGE DESCRIPTION**	**SPECIFIED TEMPERATURE RANGE**
LTC1998CS6	LTC1998CS6#TR	LTTY	6-Lead Plastic TSOT-23	–40°C to 85°C
LTC1998IS6	LTC1998IS6#TR	LTTY	6-Lead Plastic TSOT-23	–40°C to 85°C

Consult LTC Marketing for parts specified with wider operating temperature ranges. *The temperature grade is identified by a label on the shipping container.

For more information on lead free part marking, go to: http://www.linear.com/leadfree/
For more information on tape and reel specifications, go to: http://www.linear.com/tapeandreel/

ELECTRICAL CHARACTERISTICS

The ● denotes the specifications which apply over the full operating temperature range, otherwise specifications are at T_A = 25°C. V_{GND} = 0V, unless otherwise noted.

PARAMETER	CONDITIONS		MIN	TYP	MAX	UNITS
Power Supply						
Supply Voltage Range-BATT		●	1.5		5.5	V
Supply Voltage Range-V_{LOGIC}		●	1		V_{BATT}	V
Supply Current, V_{BATT} = 3V, $V_{TH.A}$ = 1.5V	T_A = 25°C			2.5	3.5	µA
	LTC1998CS6	●			4.2	µA
	LTC1998IS6	●			4.5	µA
Supply Current, V_{BATT} = 5.5V, $V_{TH.A}$ = 1.5V	T_A = 25°C			3	4.3	µA
	LTC1998CS6	●			5.2	µA
	LTC1998IS6	●			5.5	µA
Monitor						
Threshold Accuracy	$V_{BATT.Th}$ = 2.5V, Pin 3 Shorted to Ground			0.6	0.85	%
		●		0.8	1	%
	$V_{BATT.Th}$ = 3V, Pin 3 Driven by Precision Voltage Source to 1V					
	LTC1998C	●		0.5	0.61	%
	LTC1998I	●		0.6	0.71	%
	$V_{BATT.Th}$ = 3V, $V_{TH.A}$ = 1V (Note 5) Programmed with 1% Max External Resistors					
	LTC1998C	●		0.8	1	%
	LTC1998I	●		0.9	1.1	%
	$V_{BATT.Th}$ = 3.25V, Pin 3 Driven by Precision Voltage Source to 1.5V					
	LTC1998C	●		0.6	0.65	%
	LTC1998I	●		0.7	0.85	%
	$V_{BATT.Th}$ = 3.25V, $V_{TH.A}$ = 1.5V (Note 5) Programmed with 1% Max External Resistors					
	LTC1998C	●		0.9	1.1	%
	LTC1998I	●		1	1.3	%
Hysteresis Accuracy	V_{HYST} ≤ 250mV	●	–5		5	mV
	250mV ≤ V_{HYST} ≤ 750mV	●		±5		mV
Allowable Hysteresis Range (Note 2)		●	10		750	mV
Propagation Delay	C_{OUT} = 100pF					
	Overdrive = 10mV			350		µs
	Overdrive = 100mV			150		µs
Threshold Adjust Pin Leakage, $I_{TH.A}$	$V_{TH.A}$ ≤ 1.5V	●		0.01	1	nA
Hysteresis Adjust Pin Leakage, $I_{H.A}$	$V_{H.A}$ ≤ 1.5V	●		0.01	1	nA
Output						
$\overline{BATTLO}$ High Voltage	I_{OUT} = –1mA, V_{LOGIC} ≥ 1.5V	●	V_{LOGIC} – 0.3			V
$\overline{BATTLO}$ Low Voltage	I_{OUT} = 1mA, V_{BATT} ≥ 2V	●			0.2	V
$\overline{BATTLO}$ Low Voltage	I_{OUT} = 0.25mA, V_{BATT} = 1V	●		0.3		V

Note 1: Stresses beyond those listed under Absolute Maximum Ratings may cause permanent damage to the device. Exposure to any Absolute Maximum Rating condition for extended periods may affect device reliability and lifetime.

Note 2: Maximum allowable hysteresis depends on desired trip voltages. See application notes for details.

Note 3: LTC1998C and LTC1998I are guaranteed functional over the operating temperature range of –40°C to 85°C.

Note 4: The LTC1998C is guaranteed to meet specified performance from 0°C to 70°C. The LTC1998C is designed, characterized and expected to meet specified performance from –40°C to 85°C but is not tested or QA sampled at these temperatures. The LTC1998I is guaranteed to meet specified performance from –40°C to 85°C.

Note 5: This parameter is not 100% tested.

TYPICAL PERFORMANCE CHARACTERISTICS

Quiescent Supply Current vs Supply Voltage

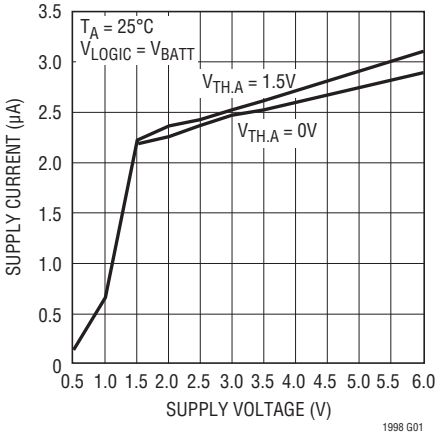

Quiescent Supply Current vs Temperature

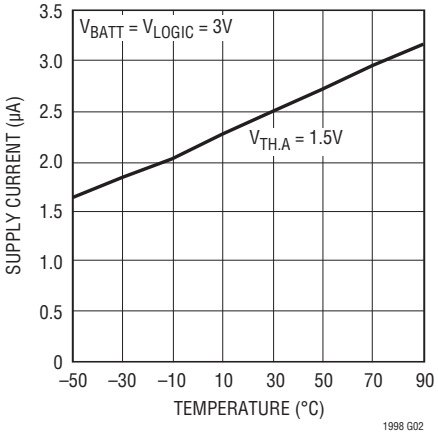

Threshold Voltage vs Threshold Adjust Voltage

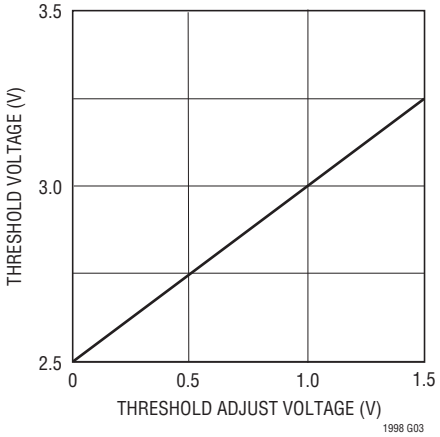

Available Hysteresis vs Threshold Voltage

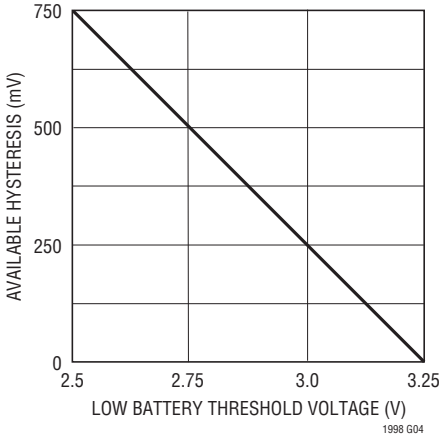

Threshold Voltage Error vs Temperature

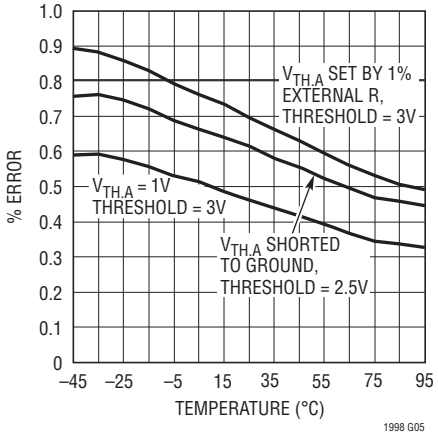

Input Current vs Temperature

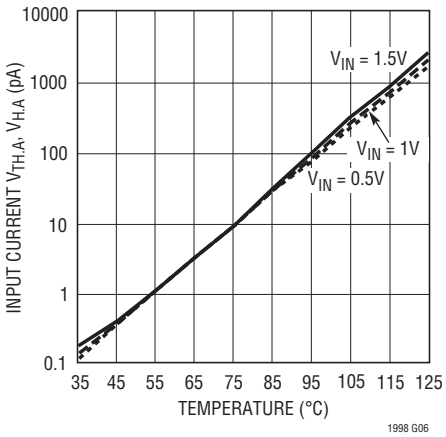

TYPICAL PERFORMANCE CHARACTERISTICS

Output Low Voltage vs Load Current

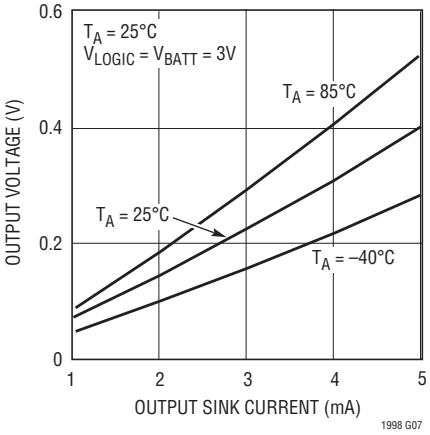

Output High Voltage vs Load Current

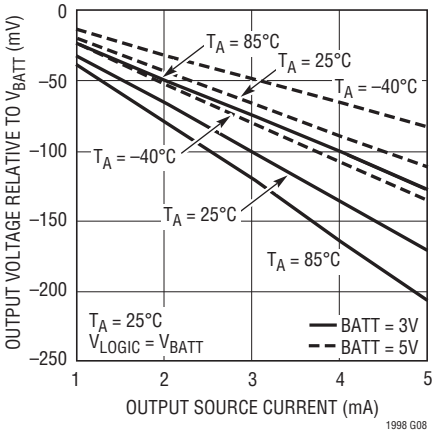

Output Short-Circuit Current vs Supply Voltage

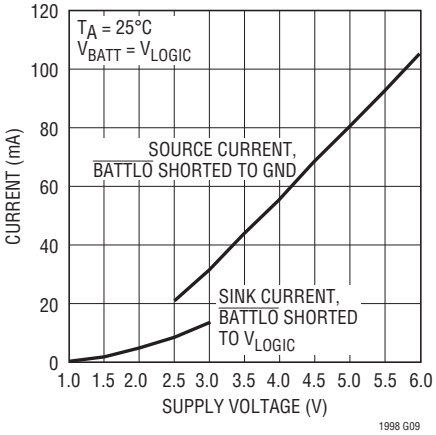

PIN FUNCTIONS

BATT (Pin 1): Battery Voltage to be monitored. Supply current is also drawn from this pin. Board layout should connect this pin to the battery(+) terminal, through a trace that does not conduct load current.

GND (Pin 2): Ground should be connected to the battery (–) terminal through a trace that does not conduct load return current.

$V_{TH.A}$ (Pin 3): Threshold Adjust Pin. Adjusts the low battery threshold voltage, $V_{BATT.Th} = 2.5V + (V_{TH.A}/2)$. $V_{TH.A}$ can be supplied by a voltage source or a resistor divider.

$V_{H.A}$ (Pin 4): Hysteresis Adjust. Hysteresis threshold voltage $V_{TH2} = 2.5V + (V_{H.A}/2)$. $V_{H.A}$ can be supplied by a voltage source or resistor divider. $V_{H.A}$ must always be programmed to a higher potential than $V_{TH.A}$. Hysteresis voltage, $V_{HYST} = V_{TH2} – V_{BATT.Th}$.

V_{LOGIC} (Pin 5): Positive Supply Voltage for Output Driver. This voltage can be driven from an external logic supply or tied to BATT.

BATTLO (Pin 6): Output of Comparator. Low for BATT < $V_{BATT.Th}$ (low battery threshold voltage). Output state guaranteed for $V_{BATT} \geq 1.5V$.

QUICK DESIGN GUIDE

How to Calculate the External Resistor Values

The LTC1998 is a low battery warning indicator and is especially designed for monitoring the voltage of single-cell Lithium-Ion batteries. The LTC1998 compares its supply pin (BATT) to an accurate internal reference; if the battery voltage falls below the programmed low battery threshold voltage of the LTC1998, the battery low pin ($\overline{BATTLO}$) will change state, from high to low, to indicate a low battery condition. The low battery threshold voltage is programmed via the voltage threshold adjust pin ($V_{TH.A}$). A hysteresis adjust pin ($V_{H.A}$) will add hysteresis to the programmed value of the low battery threshold voltage.

Typical Application

Table 1: Design Equations for R1, R2, R3, Figure 1

Choose desired values for:

- $V_{BATT.Th}$: Low Battery Threshold Voltage
- V_{HYST}: Hysteresis Voltage
- I_R: Max Allowable Resistor Current

Solve:

$$R_{TOTAL} = R1 + R2 + R3 = \frac{4.2V}{I_R}$$

$$R1 = R_{TOTAL} \bullet \left(\frac{5V}{V_{BATT.Th} + V_{HYST}} - 1 \right)$$

$$R2 = R_{TOTAL} \bullet \left(\frac{5V}{V_{BATT.Th}} - 1 \right) - R1$$

$$R3 = R_{TOTAL} - R1 - R2$$

Example 1: A system using a 4.2V (fully charged) Lithium-Ion battery requires a low battery threshold of 2.7V, 100mV hysteresis and can allow up to 4.2µA maximum resistor current.

R_{TOTAL} = 1MΩ, R1 = 786k, R2 = 66k and R3 = 148k

Choose standard 1% values.

R1 = 787k, R2 = 66.5k, R3 = 147k

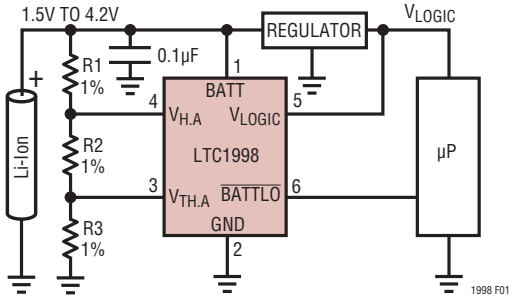

Figure 1. Low Battery Threshold Detector with Hysteresis

APPLICATIONS INFORMATION

LOW BATTERY THRESHOLD VOLTAGE AND HYSTERESIS ADJUST

Low Battery Threshold Voltage Adjustment, Pin 3

The low battery threshold voltage is the battery voltage which will trip the ($\overline{BATTLO}$) pin high to low. It should be adjusted via the threshold adjust pin ($V_{TH.A}$). This is a high input impedance pin that senses an externally applied voltage and programs the low battery threshold voltage ($V_{BATT.Th}$). The $V_{TH.A}$ pin is designed to accommodate voltages from 0V to 1.5V with respect to ground. This allows the low battery threshold voltage to be set to any voltage between 2.5V and 3.25V, that is:

$$V_{BATT.Th} = 2.5V + \frac{(V_{TH.A})}{2}$$

For instance, if the applied voltage at pin 3, $V_{TH.A}$, is 1V the LTC1998 will indicate a low battery condition when the battery voltage pin (BATT) falls below 3V.

The voltage at the threshold adjust pin ($V_{TH.A}$) can be set with any voltage source. This pin allows a continuous time adjustment, that is, the low battery threshold voltage may be changed at any time. The high input impedance of the $V_{TH.A}$ pin allows the use of a high valued resistive divider (to minimize current drain) from the battery to set the battery low threshold voltage, Figure 2.

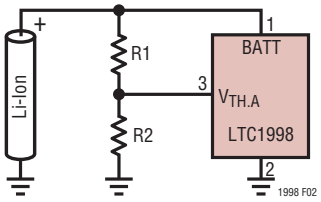

Figure 2. Resistor Divider Sets Threshold

The simple calculations of resistor values R1 and R2 are illustrated below. Set a value for R1 + R2. This value will affect the max amount of current drawn from the battery when fully charged. For instance if R1 + R2 = 1M the resistive divider will draw 4.1µA when the battery voltage is 4.1V. Set the desired value of $V_{BATT.Th}$ (this value should be between 2.5V and 3.25V) that is the value of the battery voltage that will trip the internal circuitry of the LTC1998 and change the state of the battery low pin ($\overline{BATTLO}$).

$$\text{Solve for R1} = (R1+R2)\left(\frac{5V}{V_{BATT.Th}} - 1\right)$$

Example: A Lithium-Ion battery is monitored and a battery low signal should be issued when it discharges to 2.85V, that is, $V_{BATT.Th}$ = 2.85V; if (R1 + R2) = 1M, then R1 = 754.38k and R2 = 245.62k. Choose the closest 1% value of R1 = 750k and R2 = 243k. Calculate the practical value for $V_{BATT.Th}$ as it will be slightly different from 2.85V, due to the use of standard 1% resistor values.

$$V_{BATT.Th} = 5V\frac{R1+R2}{R1+(R1+R2)} = 2.849V$$

The above low battery threshold of 2.849V is guaranteed to within 1% even though 1% resistors are used to program the $V_{TH.A}$ voltage applied to Pin 3.

For sake of completeness, the voltage at Pin 3 ($V_{TH.A}$) can be easily calculated by $V_{TH.A} = V_{BATT.Th}$ (R2/(R1 + R2) = 0.6972V (when $V_{BATTERY} = V_{BATT.Th}$).

APPLICATIONS INFORMATION

Hysteresis Adjustment, Pin 4.

The LTC1998 has an adjustable hysteresis ranging from 10mV to 0.75V. A large hysteresis is useful in the event that a low battery signal at the LTC1998's $\overline{BATTLO}$ pin causes the system to shed some battery load, thus inducing system confusion as the partially loaded battery recovers and changes the status of Pin 6 ($\overline{BATTLO}$). The 2.5V to 3.25V programming window of low battery threshold voltage includes the hysteresis. If, for instance, the low battery threshold voltage is set to 2.5V, 750mV hysteresis can be added on top of the 2.5V. If the low battery threshold voltage is set to 3.15V, only 100mV hysteresis can be applied.

The programming of the hysteresis threshold adjust pin ($V_{H.A}$) is similar to the programming of the voltage threshold adjust pin ($V_{TH.A}$) already described in the previous paragraph. Pin 4 effectively adjusts the threshold voltage at which the low battery pin ($\overline{BATTLO}$) changes state from low to high. This threshold (V_{TH2}) is defined as:

$$V_{TH2} = 2.5V + \frac{(V_{H.A})}{2}$$

The actual hysteresis voltage is:

$$V_{HYST} = V_{TH2} - V_{BATT.Th}$$

It is imperative that the hysteresis threshold adjust voltage at Pin 4 be set to a higher voltage than the low battery threshold adjust voltage at Pin 3, at all times, to avoid oscillation at the $\overline{BATTLO}$ output pin. The hysteresis threshold adjust pin may be set with a voltage source or with a resistor divider, just as with the low battery threshold adjust pin.

Combined Control of Threshold and Hysteresis

If a resistor divider is desired, then both threshold adjust dividers can be combined in order to save current. This simple technique also guarantees that the hysteresis threshold adjust voltage at Pin 4 is higher than the voltage at the $V_{TH.A}$ pin, Figure 3.

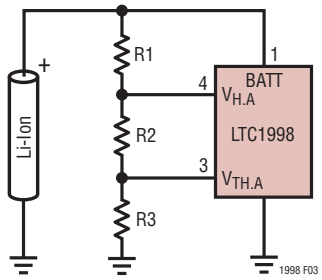

Figure 3. Combined Resistor Divider

APPLICATIONS INFORMATION

The calculation of the resistor values R1, R2 and R3 is quite straightforward and similar to the procedure outlined in the previous paragraph.

Choose a value for the sum of R1 + R2 + R3 as well as the values for low battery threshold and hysteresis.

Solve for resistor R1:

$$R1=(R1+R2+R3)\left(\frac{5V}{V_{TH2}}-1\right)$$

Solve for the sum of

$$(R1+R2)=(R1+R2+R3)\left(\frac{5V}{V_{BATT.Th}}-1\right)$$

then solve for R2 and R3.

Example: A system needs to detect a low battery voltage of 3V ($V_{BATT.Th}$ = 3V) with 250mV hysteresis (V_{TH2} = 3.25V). Set the value of the resistor divider (R1 + R2 + R3) = 1M.

R1 = 539k, R1 + R2 = 667k, R2 = 128k, R3 = 333k. Choose the closest 1% values, that is 536k, 332k, 127k. Figure 4 graphically shows the function of the LTC1998 as described above.

VERSATILE OUTPUT DRIVER

V_{LOGIC}, $\overline{BATTLO}$ (Pins 5,6)

The LTC1998 uses a CMOS push-pull output stage to drive the low battery output signal. This output pin ($\overline{BATTLO}$) has a separate supply pin, (V_{LOGIC}) that can be used to provide an output voltage rail matching the V_{DD} logic of microprocessors. The V_{LOGIC} pin may be tied to a voltage lower than the voltage at the BATT pin. The V_{LOGIC} pin may also be tied to a voltage higher than V_{BATT} via a series resistor greater than 10k. The output will then act as an open-drain device.

In a given application, if it is possible for $\overline{BATTLO}$ to be shorted to GND or a supply, a series resistor should be added to limit the short-circuit current to 5mA.

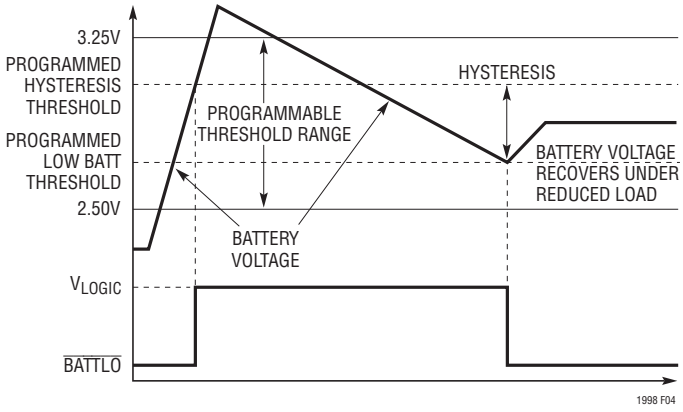

Figure 4. LTC1998 Function Plot

PACKAGE DESCRIPTION

S6 Package
6-Lead Plastic TSOT-23
(Reference LTC DWG # 05-08-1636)

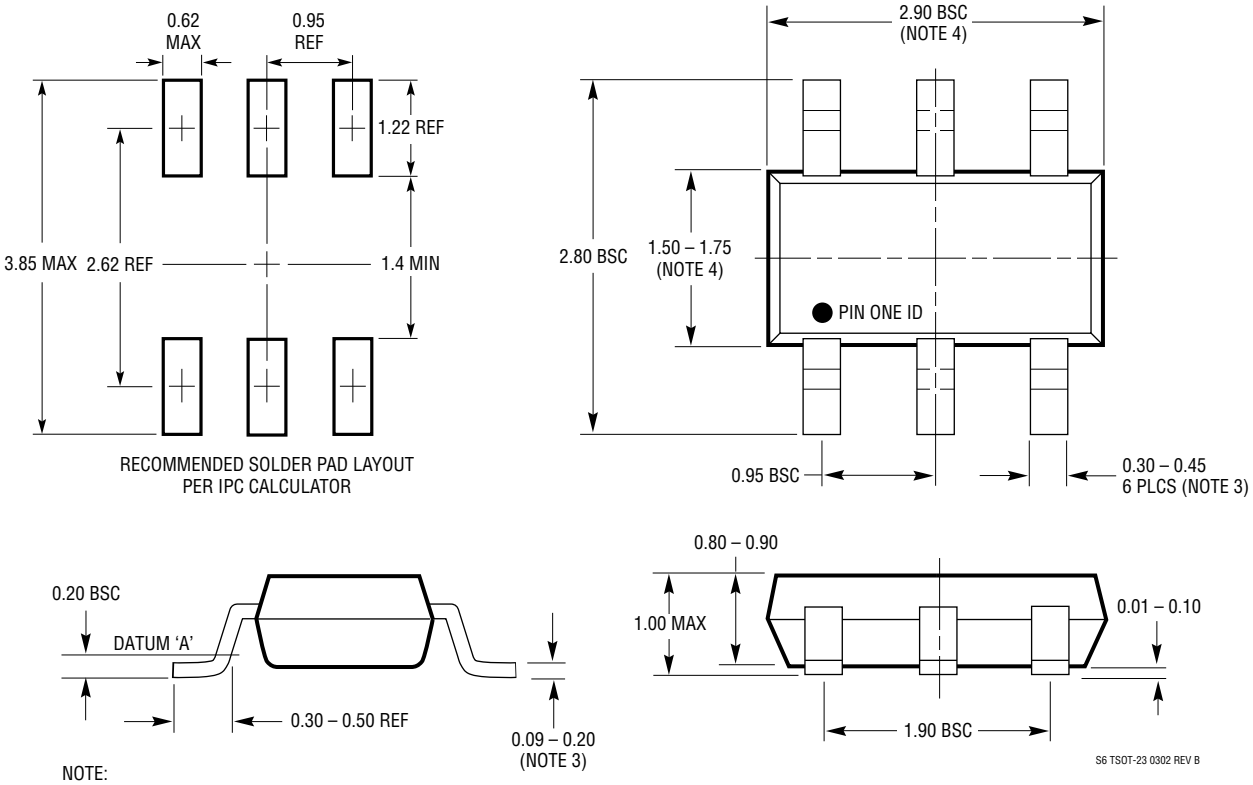

NOTE:
1. DIMENSIONS ARE IN MILLIMETERS
2. DRAWING NOT TO SCALE
3. DIMENSIONS ARE INCLUSIVE OF PLATING
4. DIMENSIONS ARE EXCLUSIVE OF MOLD FLASH AND METAL BURR
5. MOLD FLASH SHALL NOT EXCEED 0.254mm
6. JEDEC PACKAGE REFERENCE IS MO-193

Information furnished by Linear Technology Corporation is believed to be accurate and reliable. However, no responsibility is assumed for its use. Linear Technology Corporation makes no representation that the interconnection of its circuits as described herein will not infringe on existing patent rights.

TYPICAL APPLICATIONS

Single Li-Ion Cell Low Battery Detector

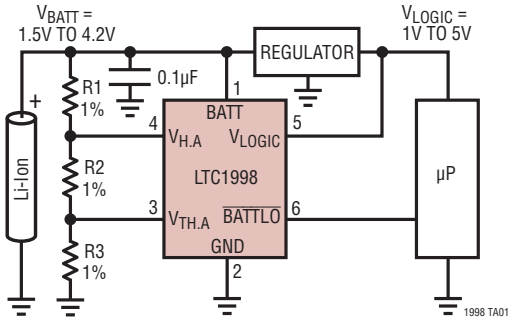

Backup Battery Switchover Circuit

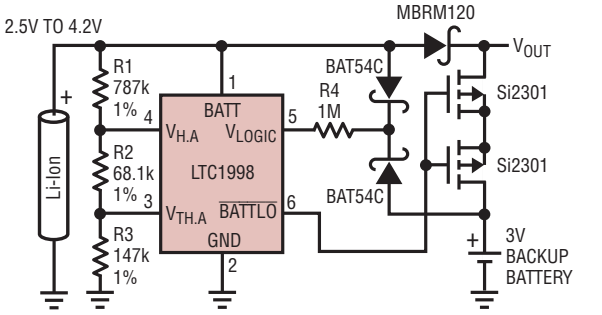

SWITCHES TO BACKUP BATTERY WHEN PRIMARY FALLS BELOW 2.7V.
SWITCHES BACK TO PRIMARY WHEN VOLTAGE RECOVERS TO ≥ 2.8V

1998 TA04

Micropower 2.9V V_{CC} Threshold Detector with 15mV Hysteresis

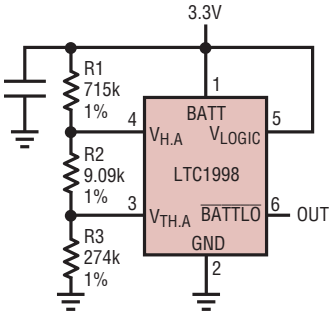

LOW THRESHOLD = 2.9V
HYSTERESIS = 15mV

1998 TA03

High Accuracy Window Comparator with Dual Hysteresis

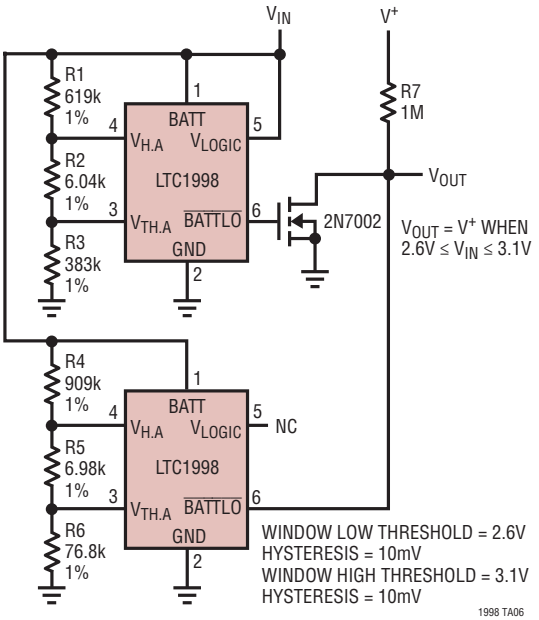

V_{OUT} = V^+ WHEN
2.6V ≤ V_{IN} ≤ 3.1V

WINDOW LOW THRESHOLD = 2.6V
HYSTERESIS = 10mV
WINDOW HIGH THRESHOLD = 3.1V
HYSTERESIS = 10mV

1998 TA06

Low Battery Load Reduction Circuit

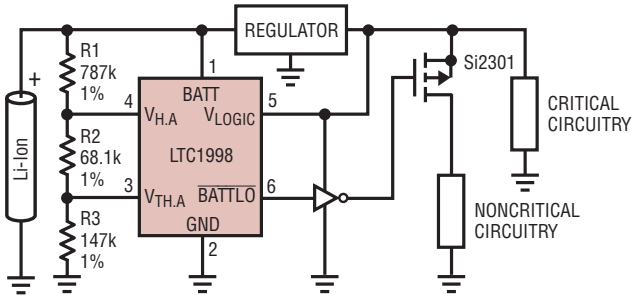

LOW THRESHOLD = 2.7V
HYSTERESIS = 100mV

1998 TA05

RELATED PARTS

PART NUMBER	DESCRIPTION	COMMENTS
LTC1440/LTC1540	Micropower Comparator with 1% Reference	1.182V ±1% Reference, ±10mV (Max) Input Offset
LTC1441/LTC1442	Micropower Dual Comparator with 1% Reference	1.182V ±1% Reference (LTC1442)
LTC1443/LTC1444/LTC1445	Micropower Quad Comparator with 1% Reference	LTC1443 has 1.182V Reference, LTC1444/LTC1445 have 1.221V Reference and Adjustable Hysteresis

Linear Technology Corporation
1630 McCarthy Blvd., Milpitas, CA 95035-7417
(408) 432-1900 • FAX: (408) 434-0507 • www.linear.com
LT 0809 REV B • PRINTED IN USA
© LINEAR TECHNOLOGY CORPORATION 2001