Monolithic Synchronous Step-Down Switching Regulator

FEATURES

- **High Efficiency: Up to 96%**
- **Constant Frequency 350kHz Operation**
- **2.65V to 8.5V V_{IN} Range**
- **V_{OUT} from 0.8V to V_{IN}, I_{OUT} to 500mA**
- **No Schottky Diode Required**
- **Synchronizable Up to 525kHz**
- **Selectable Burst Mode™ Operation**
- **Low Dropout Operation: 100% Duty Cycle**
- Precision 2.5V Undervoltage Lockout
- Secondary Winding Regulation
- Current Mode Operation for Excellent Line and Load Transient Response
- Low Quiescent Current: 200µA
- Shutdown Mode Draws Only 15µA Supply Current
- ±1.5% Reference Accuracy
- Available in 8-Lead SO Package

APPLICATIONS

- Cellular Telephones
- Portable Instruments
- Wireless Modems
- RF Communications
- Distributed Power Systems
- Scanners
- Single and Dual Cell Lithium

DESCRIPTION

The LTC®1627 is a monolithic current mode synchronous buck regulator using a fixed frequency architecture. The operating supply range is from 8.5V down to 2.65V, making it suitable for one or two lithium-ion battery-powered applications. Burst Mode operation provides high efficiency at low load currents. 100% duty cycle provides low dropout operation, which extends operating time in battery-operated systems.

The operating frequency is internally set at 350kHz, allowing the use of small surface mount inductors. For switching noise sensitive applications it can be externally synchronized up to 525kHz. The SYNC/FCB control pin guarantees regulation of secondary windings regardless of load on the main output by forcing continuous operation. Burst Mode operation is inhibited during synchronization or when the SYNC/FCB pin is pulled low to reduce noise and RF interference. Soft-start is provided by an external capacitor.

Optional bootstrapping enhances the internal switch drive for single lithium-ion cell applications. The internal synchronous switch increases efficiency and eliminates the need for an external Schottky diode, saving components and board space. The LTC1627 comes in an 8-lead SO package.

LT, LTC and LT are registered trademarks of Linear Technology Corporation.
Burst Mode is a trademark of Linear Technology Corporation.

TYPICAL APPLICATION

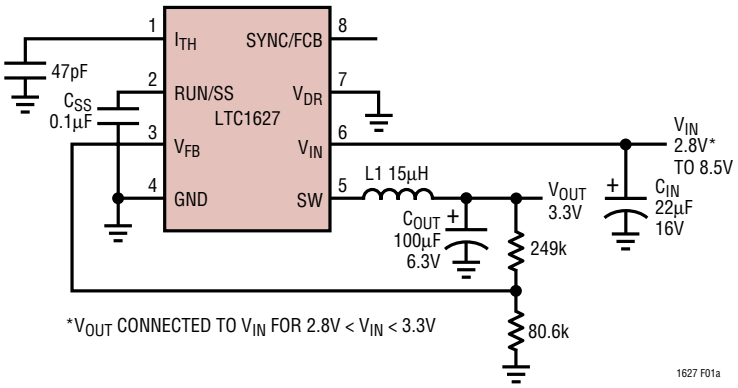

Figure 1a. High Efficiency Step-Down Converter

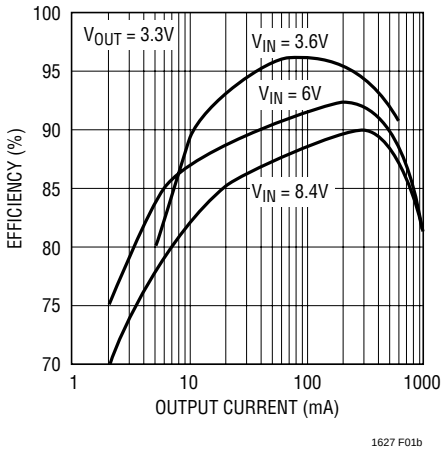

Figure 1b. Efficiency vs Output Load Current

ABSOLUTE MAXIMUM RATINGS

(Note 1)

Input Supply Voltage ..... –0.3V to 10V
Driver Supply Voltage (V_{IN} – V_{DR}) ..... –0.3V to 10V
I_{TH} Voltage ..... –0.3V to 5V
Run/SS, V_{FB} Voltages ..... –0.3V to V_{IN}
Sync/FCB Voltage ..... –0.3V to V_{IN}
V_{DR} Voltage ($V_{IN} \leq 5V$) ..... –5V to 0.3V
P-Channel Switch Source Current (DC) 800mA
N-Channel Switch Sink Current (DC) 800mA
Peak SW Sink and Source Current 1.5A
Operating Ambient Temperature Range
  Commercial ..... 0°C to 70°C
  Industrial ..... –40°C to 85°C
Junction Temperature (Note 2) ..... 125°C
Storage Temperature Range ..... –65°C to 150°C
Lead Temperature (Soldering, 10 sec) ..... 300°C

PACKAGE/ORDER INFORMATION

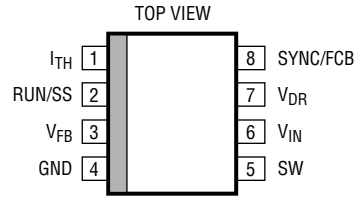

S8 PACKAGE
8-LEAD PLASTIC SO

T_{JMAX} = 125°C, θ_{JA} = 110°C/W

ORDER PART NUMBER
LTC1627CS8 LTC1627IS8
S8 PART MARKING
1627 1627I

Consult factory for Military grade parts.

ELECTRICAL CHARACTERISTICS

The ● denotes specifications which apply over the full operating temperature range, otherwise specifications are at T_A = 25°C. V_{IN} = 5V unless otherwise specified.

SYMBOL	PARAMETER	CONDITIONS		MIN	TYP	MAX	UNITS
I_{VFB}	Feedback Current	(Note 3)			20	60	nA
V_{FB}	Regulated Feedback Voltage	(Note 3)	●	0.788	0.80	0.812	V
ΔV_{OVL}	ΔOutput Overvoltage Lockout	$\Delta V_{OVL} = V_{OVL} - V_{FB}$		20	60	110	mV
ΔV_{FB}	Reference Voltage Line Regulation	V_{IN} = 2.8V to 8.5V (Note 3)			0.002	0.01	%/V
$V_{LOADREG}$	Output Voltage Load Regulation	I_{TH} Sinking 2µA (Note 3) I_{TH} Sourcing 2µA (Note 3)			0.5 –0.5	0.8 –0.8	% %
I_S	Input DC Bias Current Synchronized Burst Mode Operation Shutdown Shutdown	(Note 4) V_{IN} = 8.5V, V_{OUT} = 3.3V, Frequency = 525kHz V_{ITH} = 0V, V_{IN} = 8.5V, $V_{SYNC/FCB}$ = Open $V_{RUN/SS}$ = 0V, 2.65V < V_{IN} < 8.5V $V_{RUN/SS}$ = 0V, V_{IN} < 2.65V			 450 200 15 6	 320 35 	 µA µA µA µA
$V_{RUN/SS}$	Run/SS Threshold			0.4	0.7	1.0	V
$I_{RUN/SS}$	Soft-Start Current Source	$V_{RUN/SS}$ = 0V		1.2	2.25	3.3	µA
$V_{SYNC/FCB}$	Auxiliary Feedback Threshold	$V_{SYNC/FCB}$ Ramping Negative		0.730	0.8	0.860	V
$I_{SYNC/FCB}$	Auxiliary Feedback Current	$V_{SYNC/FCB}$ = 0V		0.5	1.5	2.5	µA
f_{OSC}	Oscillator Frequency	V_{FB} = 0.8V V_{FB} = 0V		315	350 35	385	kHz kHz
V_{UVLO}	Undervoltage Lockout	V_{IN} Ramping Down from 3V (–40°C to 85°C) V_{IN} Ramping Up from 0V (–40°C to 85°C)		2.3	2.50 2.65	2.65 2.85	V V
		V_{IN} Ramping Down from 3V (0°C to 70°C) V_{IN} Ramping Up from 0V (0°C to 70°C)		2.4	2.50 2.65	2.65 2.80	V V
R_{PFET}	$R_{DS(ON)}$ of P-Channel FET	(V_{IN} – V_{DR}) = 5V, I_{SW} = 100mA			0.5	0.7	Ω
R_{NFET}	$R_{DS(ON)}$ of N-Channel FET	I_{SW} = –100mA			0.6	0.8	Ω
I_{LSW}	SW Leakage	$V_{RUN/SS}$ = 0V			±10	±1000	nA

Note 1: Absolute Maximum Ratings are those values beyond which the life of a device may be impaired.

Note 2: T_J is calculated from the ambient temperature T_A and power dissipation P_D according to the following formula:

$T_J = T_A + (P_D \bullet 110°C/W)$

Note 3: The LTC1627 is tested in a feedback loop that servos V_{FB} to the balance point for the error amplifier (V_{ITH} = 0.8V).

Note 4: Dynamic supply current is higher due to the gate charge being delivered at the switching frequency.

TYPICAL PERFORMANCE CHARACTERISTICS

Efficiency vs Input Voltage

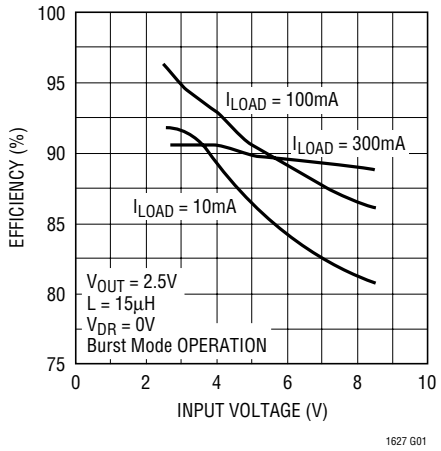

Efficiency vs Load Current

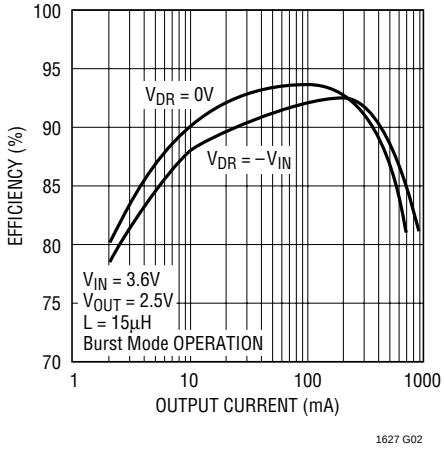

Efficiency vs Load Current

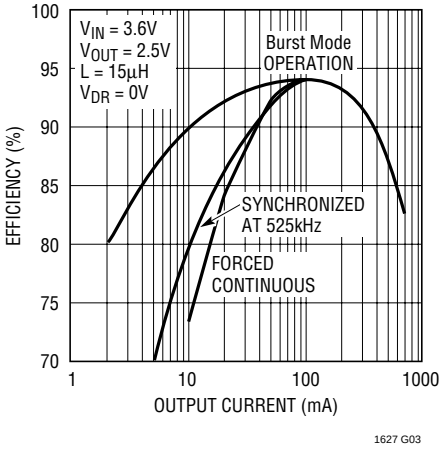

Efficiency vs Load Current

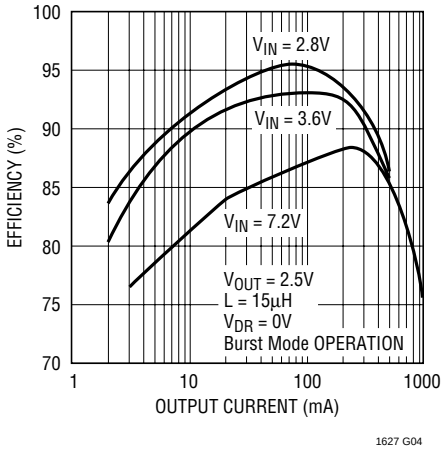

Undervoltage Lockout Threshold vs Temperature

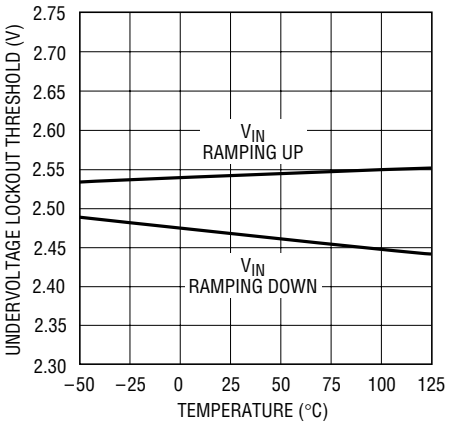

DC Supply Current* vs Input Voltage

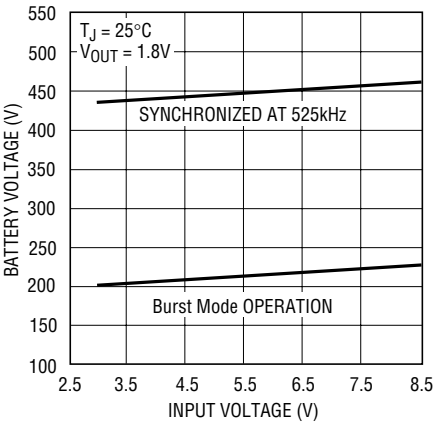

*DOES NOT INCLUDE GATE CHARGE CURRENT

Supply Current in Shutdown vs Input Voltage

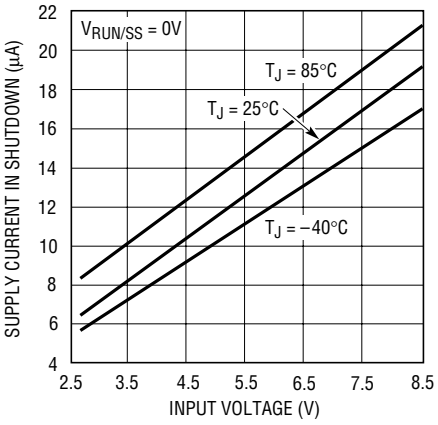

Reference Voltage vs Temperature

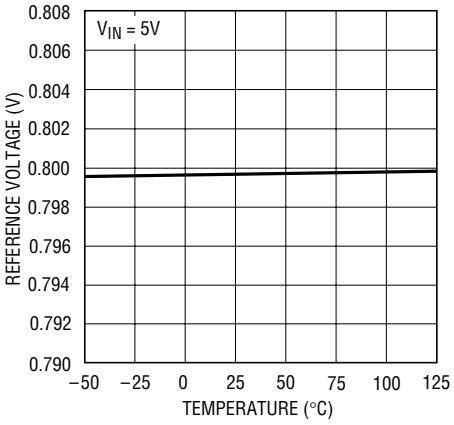

Forced Continuous Threshold Voltage vs Temperature

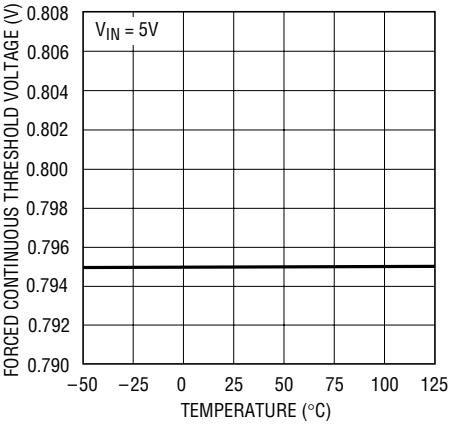

TYPICAL PERFORMANCE CHARACTERISTICS

Oscillator Frequency vs Temperature

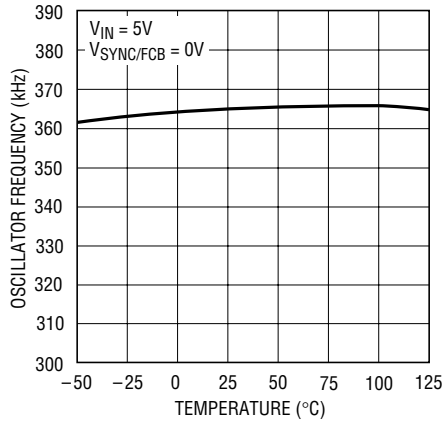

Oscillator Frequency vs Input Voltage

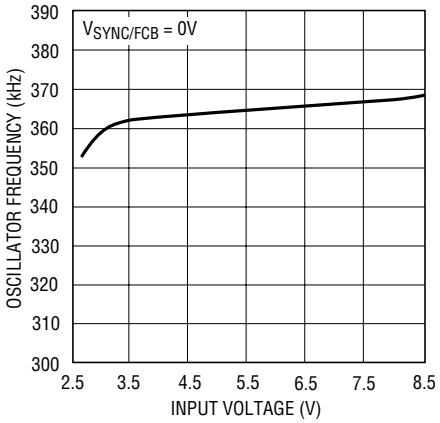

Maximum Output Load Current vs Input Voltage

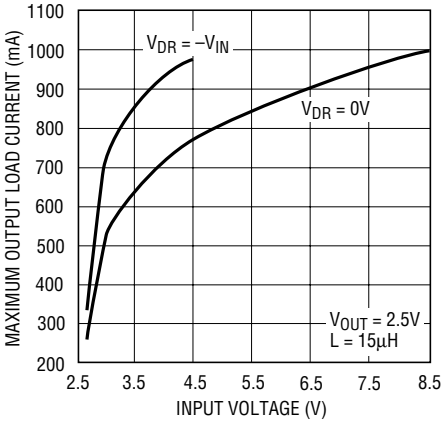

Switch Leakage Current vs Temperature

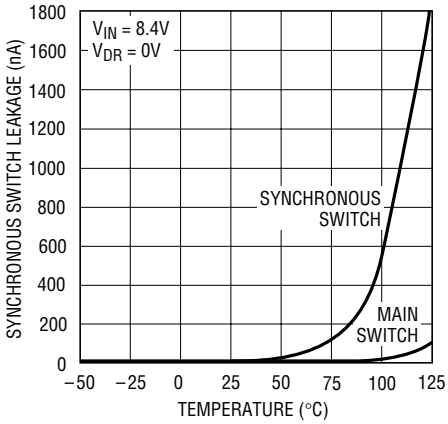

Switch Resistance vs Temperature

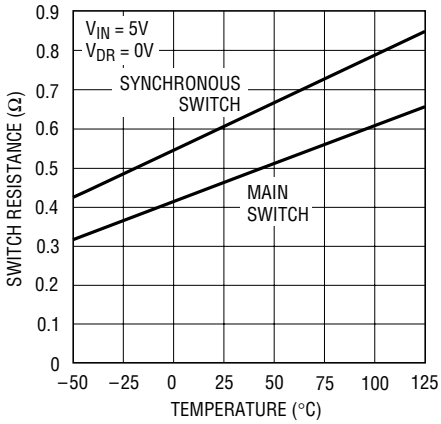

Switch Resistance vs Input Voltage

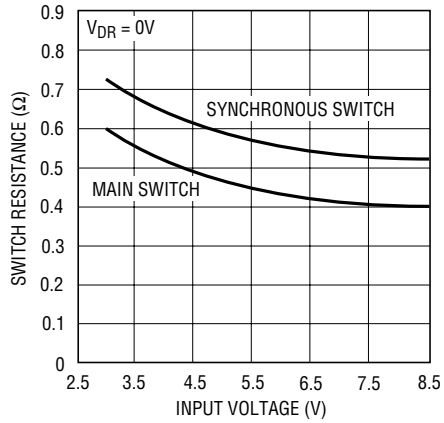

Load Step Transient Response

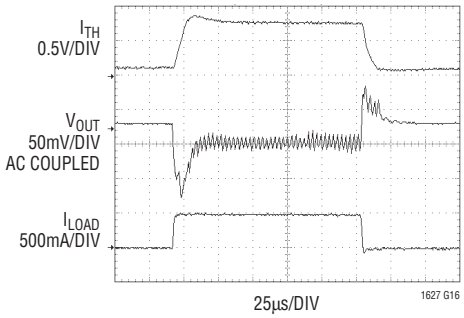

V_{IN} = 5V
V_{OUT} = 3.3V
L = 15µH
C_{IN} = 22µF
C_{OUT} = 100µF
I_{LOAD} = 0mA TO 500mA
Burst Mode OPERATION

Load Step Transient Response

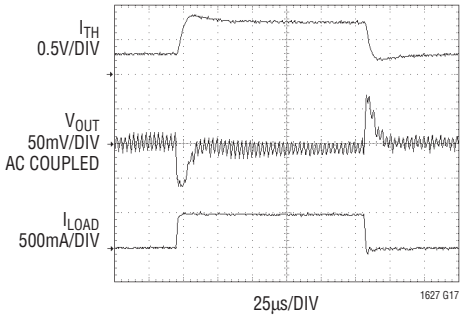

V_{IN} = 5V
V_{OUT} = 3.3V
L = 15µH
C_{IN} = 22µF
C_{OUT} = 100µF
I_{LOAD} = 0mA TO 500mA
FORCED CONTINUOUS MODE

Burst Mode Operation

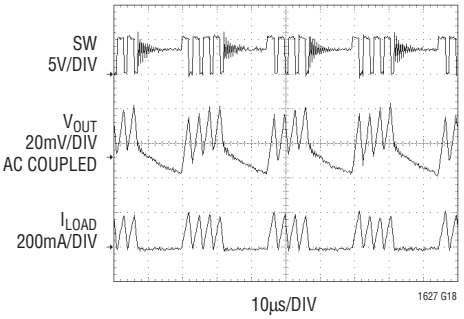

V_{IN} = 5V
V_{OUT} = 3.3V
L = 15µH
C_{IN} = 22µF
C_{OUT} = 100µF
I_{LOAD} = 50mA

PIN FUNCTIONS

I_{TH} (Pin 1): Error Amplifier Compensation Point. The current comparator threshold increases with this control voltage. Nominal voltage range for this pin is 0V to 1.2V.

RUN/SS (Pin 2): Combination of Soft-Start and Run Control Inputs. A capacitor to ground at this pin sets the ramp time to full current output. The time is approximately 0.5s/µF. Forcing this pin below 0.4V shuts down all the circuitry.

V_{FB} (Pin 3): Feedback Pin. Receives the feedback voltage from an external resistive divider across the output.

GND (Pin 4): Ground Pin.

SW (Pin 5): Switch Node Connection to Inductor. This pin connects to the drains of the internal main and synchronous power MOSFET switches.

V_{IN} (Pin 6): Main Supply Pin. Must be closely decoupled to GND, Pin 4.

V_{DR} (Pin 7): Top Driver Return Pin. This pin can be bootstrapped to go below ground to improve efficiency at low V_{IN} (see Applications Information).

SYNC/FCB (Pin 8): Multifunction Pin. This pin performs three functions: 1) secondary winding feedback input, 2) external clock synchronization and 3) Burst Mode operation or forced continuous mode select. For secondary winding applications connect a resistive divider from the secondary output. To synchronize with an external clock apply a TTL/CMOS compatible clock with a frequency between 385kHz and 525kHz. To select Burst Mode operation, float the pin or tie it to V_{IN}. Grounding Pin 8 forces continuous operation (see Applications Information).

FUNCTIONAL DIAGRAM

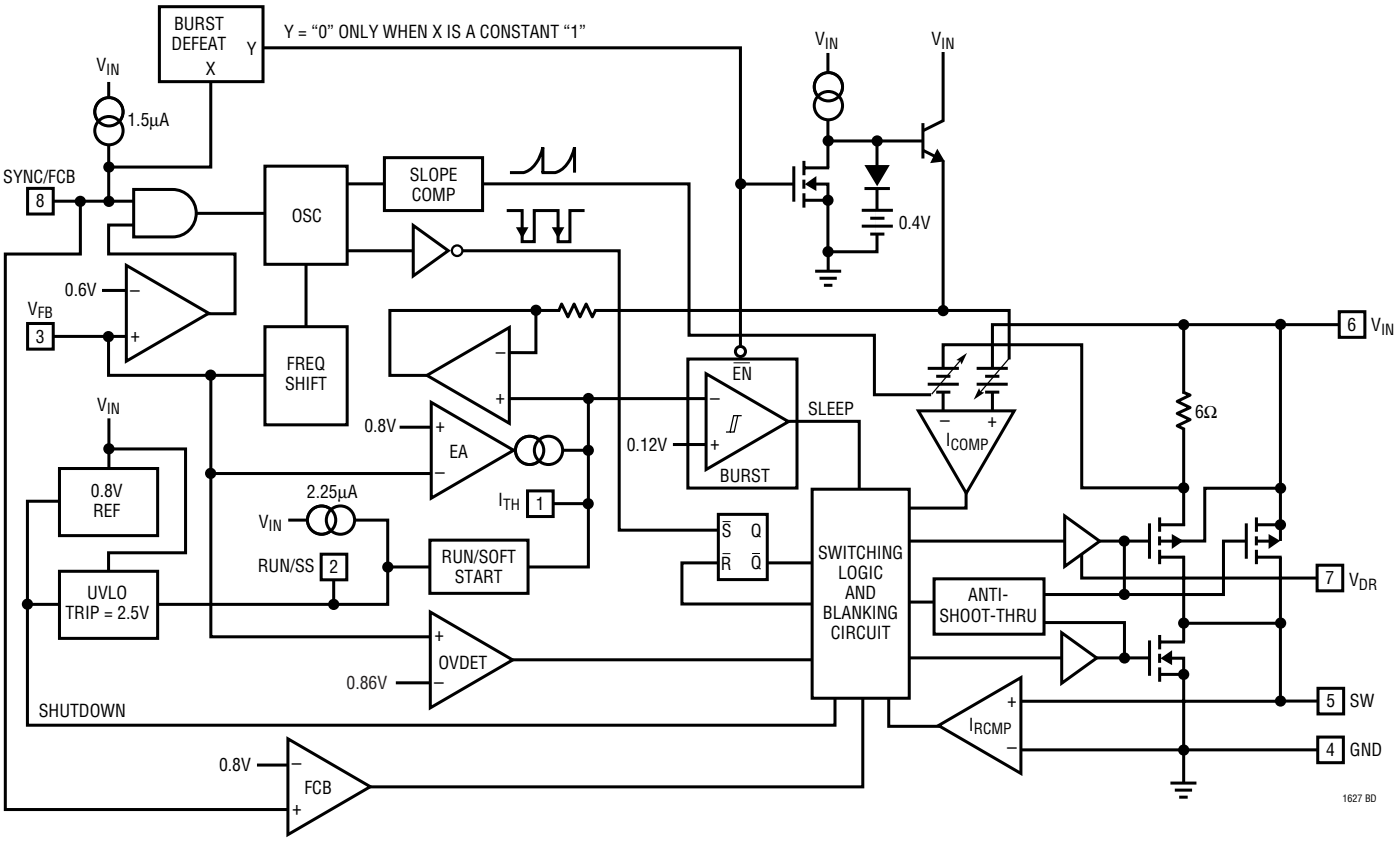

OPERATION (Refer to Functional Diagram)

Main Control Loop

The LTC1627 uses a constant frequency, current mode step-down architecture. Both the main and synchronous switches, consisting of top P-channel and bottom N-channel power MOSFETs, are internal. During normal operation, the internal top power MOSFET is turned on each cycle when the oscillator sets the RS latch, and turned off when the current comparator, I_{COMP}, resets the RS latch. The peak inductor current at which I_{COMP} resets the RS latch is controlled by the voltage on the I_{TH} pin, which is the output of error amplifier EA. The V_{FB} pin, described in the Pin Functions section, allows EA to receive an output feedback voltage from an external resistive divider. When the load current increases, it causes a slight decrease in the feedback voltage relative to the 0.8V reference, which, in turn, causes the I_{TH} voltage to increase until the average inductor current matches the new load current. While the top MOSFET is off, the bottom MOSFET is turned on until either the inductor current starts to reverse as indicated by the current reversal comparator I_{RCMP}, or the beginning of the next cycle.

The main control loop is shut down by pulling the RUN/SS pin low. Releasing RUN/SS allows an internal 2.25µA current source to charge soft-start capacitor C_{SS}. When C_{SS} reaches 0.7V, the main control loop is enabled with the I_{TH} voltage clamped at approximately 5% of its maximum value. As C_{SS} continues to charge, I_{TH} is gradually released, allowing normal operation to resume.

Comparator OVDET guards against transient overshoots >7.5% by turning the main switch off and turning the synchronous switch on. With the synchronous switch turned on, the output is crowbarred. This may cause a large amount of current to flow from V_{IN} if the main switch is damaged, blowing the system fuse.

Burst Mode Operation

The LTC1627 is capable of Burst Mode operation in which the internal power MOSFETs operate intermittently based on load demand. To enable Burst Mode operation, simply allow the SYNC/FCB pin to float or connect it to a logic high. To disable Burst Mode operation and enable forced continuous mode, connect the SYNC/FCB pin to GND. In this mode, the efficiency is lowest at light loads, but becomes comparable to Burst Mode operation when the output load exceeds 100mA. The threshold voltage between Burst Mode operation and forced continuous mode is 0.8V. This can be used to assist in secondary winding regulation as described in Auxiliary Winding Control Using SYNC/FCB Pin in the Applications Information section.

When the converter is in Burst Mode operation, the peak current of the inductor is set to approximately 200mA, even though the voltage at the I_{TH} pin indicates a lower value. The voltage at the I_{TH} pin drops when the inductor's average current is greater than the load requirement. As the I_{TH} voltage drops below 0.12V, the BURST comparator trips, causing the internal sleep line to go high and turn off both power MOSFETs.

In sleep mode, both power MOSFETs are held off and the internal circuitry is partially turned off, reducing the quiescent current to 200µA. The load current is now being supplied from the output capacitor. When the output voltage drops, causing I_{TH} to rise above 0.22V, the top MOSFET is again turned on and this process repeats.

Short-Circuit Protection

When the output is shorted to ground, the frequency of the oscillator is reduced to about 35kHz, 1/10 the nominal frequency. This frequency foldback ensures that the inductor current has more time to decay, thereby preventing runaway. The oscillator's frequency will progressively increase to 350kHz (or the synchronized frequency) when V_{FB} rises above 0.3V.

Frequency Synchronization

The LTC1627 can be synchronized with an external TTL/CMOS compatible clock signal. The frequency range of this signal must be from 385kHz to 525kHz. *Do not* attempt to synchronize the LTC1627 below 385kHz as this may cause abnormal operation and an undesired frequency spectrum. The top MOSFET turn-on follows the rising edge of the external source.

When the LTC1627 is clocked by an external source, Burst Mode operation is disabled; the LTC1627 then operates in PWM pulse skipping mode. In this mode, when the output load is very low, current comparator I_{COMP} remains tripped for more than one cycle and forces the main switch to stay off for the same number of cycles. Increasing the output

OPERATION

load slightly allows constant frequency PWM operation to resume.

Frequency synchronization is inhibited when the feedback voltage V_{FB} is below 0.6V. This prevents the external clock from interfering with the frequency foldback for short-circuit protection.

Dropout Operation

When the input supply voltage decreases toward the output voltage, the duty cycle increases toward the maximum on-time. Further reduction of the supply voltage forces the main switch to remain on for more than one cycle until it reaches 100% duty cycle. The output voltage will then be determined by the input voltage minus the voltage drop across the P-channel MOSFET and the inductor.

In Burst Mode operation or pulse skipping mode operation (externally synchronized) with the output lightly loaded, the LTC1627 transitions through continuous mode as it enters dropout.

Undervoltage Lockout

A precision undervoltage lockout shuts down the LTC1627 when V_{IN} drops below 2.5V, making it ideal for single lithium-ion battery applications. In lockout, the LTC1627 draws only several microamperes, which is low enough to prevent deep discharge and possible damage to the lithium-ion battery nearing its end of charge. A 150mV hysteresis ensures reliable operation with noisy supplies.

Low Supply Operation

The LTC1627 is designed to operate down to 2.65V supply voltage. At this voltage the converter is most likely to be running at high duty cycles or in dropout where the main switch is on continuously. Hence, the I^2R loss is due mainly to the $R_{DS(ON)}$ of the P-channel MOSFET. See Efficiency Considerations in the Applications Information section.

When V_{IN} is low (<4.5V) the $R_{DS(ON)}$ of the P-channel MOSFET can be lowered by driving its gate below ground. The top P-channel MOSFET driver makes use of a floating return pin, V_{DR}, to allow biasing below GND. A simple charge pump bootstrapped to the SW pin realizes a negative voltage at the V_{DR} pin as shown in Figure 2. Using

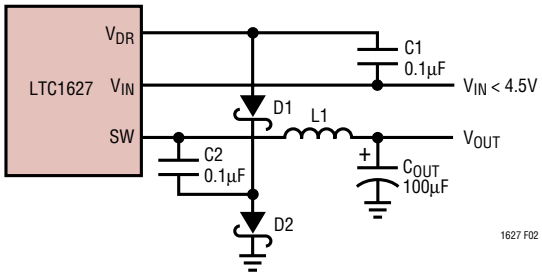

Figure 2. Using a Charge Pump to Bias V_{DR}

the charge pump at $V_{IN} \geq 4.5V$ is not recommended to ensure that ($V_{IN} - V_{DR}$) does not exceed its absolute maximum voltage.

When V_{IN} decreases to a voltage close to V_{OUT}, the loop may enter dropout and attempt to turn on the P-channel MOSFET continuously. When the V_{DR} charge pump is enabled, a dropout detector counts the number of oscillator cycles that the P-channel MOSFET remains on, and periodically forces a brief off period to allow C1 to recharge. 100% duty cycle is allowed when V_{DR} is grounded.

Slope Compensation and Inductor Peak Current

Slope compensation provides stability by preventing subharmonic oscillations. It works by internally adding a ramp to the inductor current signal at duty cycles in excess of 40%. As a result, the maximum inductor peak current is lower for $V_{OUT}/V_{IN} > 0.4$ than when $V_{OUT}/V_{IN} < 0.4$. See the inductor peak current as a function of duty cycle graph in Figure 3. The worst-case peak current reduction occurs with the oscillator synchronized at its minimum frequency, i.e., to a clock just above the oscillator free-running

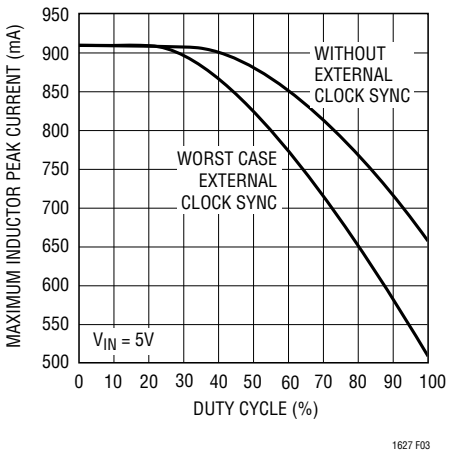

Figure 3. Maximum Inductor Peak Current vs Duty Cycle

APPLICATIONS INFORMATION

frequency. The actual reduction in average current is less than for peak current.

The basic LTC1627 application circuit is shown in Figure 1. External component selection is driven by the load requirement and begins with the selection of L followed by C_{IN} and C_{OUT}.

Inductor Value Calculation

The inductor selection will depend on the operating frequency of the LTC1627. The internal preset frequency is 350kHz, but can be externally synchronized up to 525kHz.

The operating frequency and inductor selection are interrelated in that higher operating frequencies allow the use of smaller inductor and capacitor values. However, operating at a higher frequency generally results in lower efficiency because of internal gate charge losses.

The inductor value has a direct effect on ripple current. The ripple current ΔI_L decreases with higher inductance or frequency and increases with higher V_{IN} or V_{OUT}.

$$\Delta I_L = \frac{1}{(f)(L)} V_{OUT}\left(1 - \frac{V_{OUT}}{V_{IN}}\right) \quad (1)$$

Accepting larger values of ΔI_L allows the use of low inductances, but results in higher output voltage ripple and greater core losses. A reasonable starting point for setting ripple current is $\Delta I_L = 0.4(I_{MAX})$.

The inductor value also has an effect on Burst Mode operation. The transition to low current operation begins when the inductor current peaks fall to approximately 200mA. Lower inductor values (higher ΔI_L) will cause this to occur at lower load currents, which can cause a dip in efficiency in the upper range of low current operation. In Burst Mode operation, lower inductance values will cause the burst frequency to increase.

Inductor Core Selection

Once the value for L is known, the type of inductor must be selected. High efficiency converters generally cannot afford the core loss found in low cost powdered iron cores, forcing the use of more expensive ferrite, molypermalloy, or Kool Mμ® cores. Actual core loss is independent of core size for a fixed inductor value, but it is very dependent on inductance selected. As inductance increases, core losses go down. Unfortunately, increased inductance requires more turns of wire and therefore copper losses will increase.

Ferrite designs have very low core losses and are preferred at high switching frequencies, so design goals can concentrate on copper loss and preventing saturation. Ferrite core material saturates "hard," which means that inductance collapses abruptly when the peak design current is exceeded. This results in an abrupt increase in inductor ripple current and consequent output voltage ripple. Do not allow the core to saturate!

Kool Mμ (from Magnetics, Inc.) is a very good, low loss core material for toroids with a "soft" saturation characteristic. Molypermalloy is slightly more efficient at high (>200kHz) switching frequencies but quite a bit more expensive. Toroids are very space efficient, especially when you can use several layers of wire, while inductors wound on bobbins are generally easier to surface mount. New designs for surface mount are available from Coiltronics, Coilcraft and Sumida.

C_{IN} and C_{OUT} Selection

In continuous mode, the source current of the top MOSFET is a square wave of duty cycle V_{OUT}/V_{IN}. To prevent large voltage transients, a low ESR input capacitor sized for the maximum RMS current must be used. The maximum RMS capacitor current is given by:

$$C_{IN} \text{ required } I_{RMS} \cong I_{MAX} \frac{\left[V_{OUT}\left(V_{IN} - V_{OUT}\right)\right]^{1/2}}{V_{IN}}$$

This formula has a maximum at $V_{IN} = 2V_{OUT}$, where $I_{RMS} = I_{OUT}/2$. This simple worst-case condition is commonly used for design because even significant deviations do not offer much relief. Note that capacitor manufacturer's ripple current ratings are often based on 2000 hours of life. This makes it advisable to further derate the capacitor, or choose a capacitor rated at a higher temperature than required. Several capacitors may also be paralleled to meet size or height requirements in the design. Always consult the manufacturer if there is any question.

Kool Mμ is a registered trademark of Magnetics, Inc.

APPLICATIONS INFORMATION

The selection of C_{OUT} is driven by the required effective series resistance (ESR). Typically, once the ESR requirement is satisfied, the capacitance is adequate for filtering. The output ripple ΔV_{OUT} is determined by:

$$\Delta V_{OUT} \cong \Delta I_L \left(ESR + \frac{1}{8fC_{OUT}} \right)$$

where f = operating frequency, C_{OUT} = output capacitance and ΔI_L = ripple current in the inductor. The output ripple is highest at maximum input voltage since ΔI_L increases with input voltage. For the LTC1627, the general rule for proper operation is:

C_{OUT} required ESR < 0.25Ω

Manufacturers such as Nichicon, United Chemicon and Sanyo should be considered for high performance through-hole capacitors. The OS-CON semiconductor dielectric capacitor available from Sanyo has the lowest ESR/size ratio of any aluminum electrolytic at a somewhat higher price. Once the ESR requirement for C_{OUT} has been met, the RMS current rating generally far exceeds the $I_{RIPPLE(P-P)}$ requirement.

In surface mount applications multiple capacitors may have to be paralleled to meet the ESR or RMS current handling requirements of the application. Aluminum electrolytic and dry tantalum capacitors are both available in surface mount configurations. In the case of tantalum, it is critical that the capacitors are surge tested for use in switching power supplies. An excellent choice is the AVX TPS series of surface mount tantalum, available in case heights ranging from 2mm to 4mm. Other capacitor types include Sanyo POSCAP, KEMET T510 and T495 series, Nichicon PL series and Sprague 593D and 595D series. Consult the manufacturer for other specific recommendations.

Output Voltage Programming

The output voltage is set by a resistive divider according to the following formula:

$$V_{OUT} = 0.8V\left(1 + \frac{R2}{R1}\right) \quad (2)$$

The external resistive divider is connected to the output, allowing remote voltage sensing as shown in Figure 4.

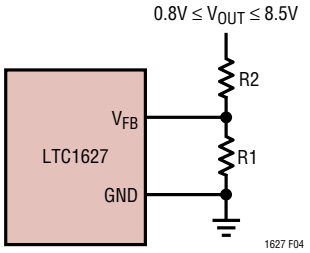

Figure 4. Setting the LTC1627 Output Voltage

Run/Soft-Start Function

The RUN/SS pin is a dual purpose pin that provides the soft-start function and a means to shut down the LTC1627. Soft-start reduces surge currents from V_{IN} by gradually increasing the internal current limit. Power supply sequencing can also be accomplished using this pin.

An internal 2.25μA current source charges up an external capacitor C_{SS}. When the voltage on RUN/SS reaches 0.7V the LTC1627 begins operating. As the voltage on RUN/SS continues to ramp from 0.7V to 1.8V, the internal current limit is also ramped at a proportional linear rate. The current limit begins at 25mA (at $V_{RUN/SS} \leq 0.7V$) and ends at the Figure 3 value ($V_{RUN/SS} \approx 1.8V$). The output current thus ramps up slowly, charging the output capacitor. If RUN/SS has been pulled all the way to ground, there will be a delay before the current starts increasing and is given by:

$$t_{DELAY} = \frac{0.7C_{SS}}{2.25\mu A}$$

Pulling the RUN/SS pin below 0.4V puts the LTC1627 into a low quiescent current shutdown ($I_Q < 15\mu A$). This pin can be driven directly from logic as shown in Figure 5. Diode D1 in Figure 5 reduces the start delay but allows C_{SS} to ramp up slowly providing the soft-start function. This diode can be deleted if soft-start is not needed.

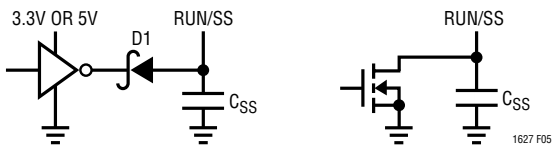

Figure 5. RUN/SS Pin Interfacing

APPLICATIONS INFORMATION

Auxiliary Winding Control Using SYNC/FCB Pin

The SYNC/FCB pin can be used as a secondary feedback input to provide a means of regulating a flyback winding output. When this pin drops below its ground referenced 0.8V threshold, continuous mode operation is forced. In continuous mode, the main and synchronous MOSFETs are switched continuously regardless of the load on the main output.

Synchronous switching removes the normal limitation that power must be drawn from the inductor primary winding in order to extract power from auxiliary windings. With continuous synchronous operation power can be drawn from the auxiliary windings without regard to the primary output load.

The secondary output voltage is set by the turns ratio of the transformer in conjunction with a pair of external resistors returned to the SYNC/FCB pin as shown in Figure 6. The secondary regulated voltage V_{SEC} in Figure 6 is given by:

$$V_{SEC} \cong (N+1)(V_{OUT}) - V_{DIODE} > 0.8V\left(1+\frac{R4}{R3}\right)$$

where N is the turns ratio of the transformer, V_{OUT} is the main output voltage sensed by V_{FB} and V_{DIODE} is the voltage drop across the Schottky diode.

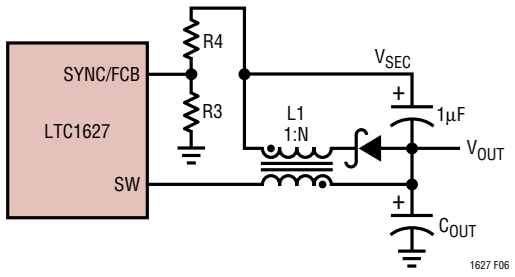

Figure 6. Secondary Output Loop Connection

Efficiency Considerations

The efficiency of a switching regulator is equal to the output power divided by the input power times 100%. It is often useful to analyze individual losses to determine what is limiting the efficiency and which change would produce the most improvement. Efficiency can be expressed as:

$$\text{Efficiency} = 100\% - (L1 + L2 + L3 + ...)$$

where L1, L2, etc. are the individual losses as a percentage of input power.

Although all dissipative elements in the circuit produce losses, two main sources usually account for most of the losses in LTC1627 circuits: V_{IN} quiescent current and I^2R losses.

1. The V_{IN} quiescent current is due to two components: the DC bias current as given in the electrical characteristics and the internal main switch and synchronous switch gate charge currents. The gate charge current results from switching the gate capacitance of the internal power MOSFET switches. Each time the gate is switched from high to low to high again, a packet of charge dQ moves from V_{IN} to ground. The resulting dQ/dt is the current out of V_{IN} that is typically larger than the DC bias current. In continuous mode, $I_{GATECHG} = f(Q_T + Q_B)$ where Q_T and Q_B are the gate charges of the internal top and bottom switches. Both the DC bias and gate charge losses are proportional to V_{IN} and thus their effects will be more pronounced at higher supply voltages.
2. I^2R losses are calculated from the resistances of the internal switches R_{SW} and external inductor R_L. In continuous mode the average output current flowing through inductor L is "chopped" between the main switch and the synchronous switch. Thus, the series resistance looking into SW pin from L is a function of both top and bottom MOSFET $R_{DS(ON)}$ and the duty cycle (DC) as follows:

   $$R_{SW} = (R_{DS(ON)TOP})(DC) + (R_{DS(ON)BOT})(1 - DC)$$

   The $R_{DS(ON)}$ for both the top and bottom MOSFETs can be obtained from the Typical Performance Characteristics curves. Thus, to obtain I^2R losses, simply add R_{SW} to R_L and multiply by the square of the average output current.

Other losses including C_{IN} and C_{OUT} ESR dissipative losses, MOSFET switching losses and inductor core losses generally account for less than 2% total additional loss.

APPLICATIONS INFORMATION

Checking Transient Response

The regulator loop response can be checked by looking at the load transient response. Switching regulators take several cycles to respond to a step in load current. When a load step occurs, V_{OUT} immediately shifts by an amount equal to (ΔI_{LOAD} • ESR), where ESR is the effective series resistance of C_{OUT}. ΔI_{LOAD} also begins to charge or discharge C_{OUT}, which generates a feedback error signal. The regulator loop then acts to return V_{OUT} to its steady-state value. During this recovery time V_{OUT} can be monitored for overshoot or ringing that would indicate a stability problem. The internal compensation provides adequate compensation for most applications. But if additional compensation is required, the I_{TH} pin can be used for external compensation as shown in Figure 7.

A second, more severe transient is caused by switching in loads with large (>1µF) supply bypass capacitors. The discharged bypass capacitors are effectively put in parallel with C_{OUT}, causing a rapid drop in V_{OUT}. No regulator can deliver enough current to prevent this problem if the load switch resistance is low and it is driven quickly. The only solution is to limit the rise time of the switch drive so that the load rise time is limited to approximately (25 • C_{LOAD}). Thus, a 10µF capacitor would require a 250µs rise time, limiting the charging current to about 130mA.

PC Board Layout Checklist

When laying out the printed circuit board, the following checklist should be used to ensure proper operation of the LTC1627. These items are also illustrated graphically in the layout diagram of Figure 7. Check the following in your layout:

1. Are the signal and power grounds segregated? The LTC1627 signal ground consists of the resistive divider, the optional compensation network (R_C and C_{C1}), C_{SS} and C_{C2}. The power ground consists of the (–) plate of C_{IN}, the (–) plate of C_{OUT} and Pin 4 of the LTC1627. The power ground traces should be kept short, direct and wide. The signal ground and power ground should converge to a common node in a star-ground configuration.
2. Does the V_{FB} pin connect directly to the feedback resistors? The resistive divider R1/R2 must be connected between the (+) plate of C_{OUT} and signal ground.

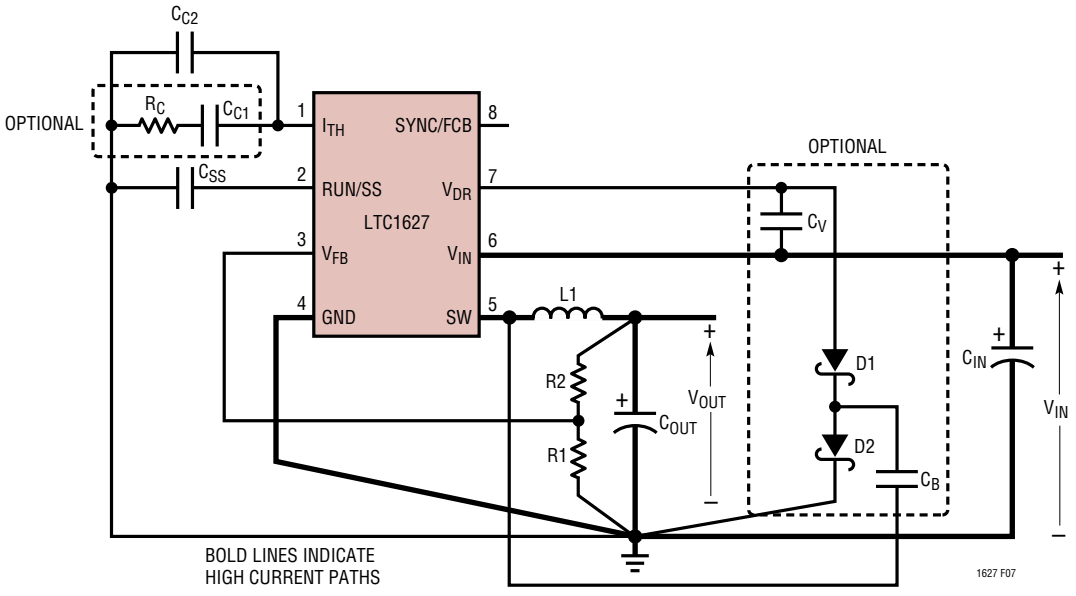

Figure 7. LTC1627 Layout Diagram

APPLICATIONS INFORMATION

3. Does the (+) plate of C_{IN} connect to V_{IN} as closely as possible? This capacitor provides the AC current to the internal power MOSFETs.
4. Keep the switching node SW away from sensitive small-signal nodes.

Design Example

As a design example, assume the LTC1627 is used in a single lithium-ion battery-powered cellular phone application. The V_{IN} will be operating from a maximum of 4.2V down to about 2.7V. The load current requirement is a maximum of 0.5A but most of the time it will be on standby mode, requiring only 2mA. Efficiency at both low and high load currents is important. Output voltage is 2.5V. With this information we can calculate L using equation (1),

$$L = \frac{1}{(f)(\Delta I_L)} V_{OUT}\left(1 - \frac{V_{OUT}}{V_{IN}}\right) \quad (3)$$

Substituting V_{OUT} = 2.5V, V_{IN} = 4.2V, ΔI_L = 200mA and f = 350kHz in equation (3) gives:

$$L = \frac{2.5V}{(350kHz)(200mA)}\left(1 - \frac{2.5V}{4.2V}\right) = 14.5\mu H$$

A 15µH inductor works well for this application. For good efficiency choose a 1A inductor with less than 0.25Ω series resistance.

C_{IN} will require an RMS current rating of at least 0.25A at temperature and C_{OUT} will require an ESR of less than 0.25Ω. In most applications, the requirements for these capacitors are fairly similar.

For the feedback resistors, choose R1 = 80.6k. R2 can then be calculated from equation (2) to be:

$$R2 = \left(\frac{V_{OUT}}{0.8} - 1\right) \bullet R1 = 171k; \text{ use } 169k$$

Figure 8 shows the complete circuit along with its efficiency curve.

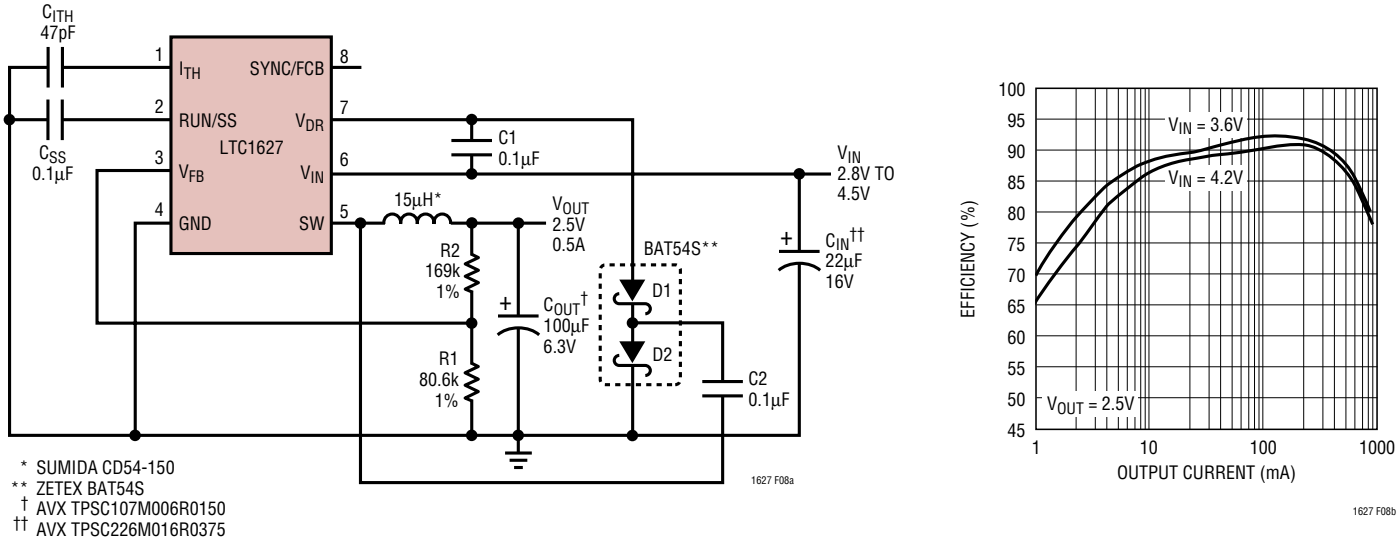

Figure 8. Single Lithium-Ion to 2.5V/0.5A Regulator

TYPICAL APPLICATIONS

5V Input to 3.3V/0.5A Regulator

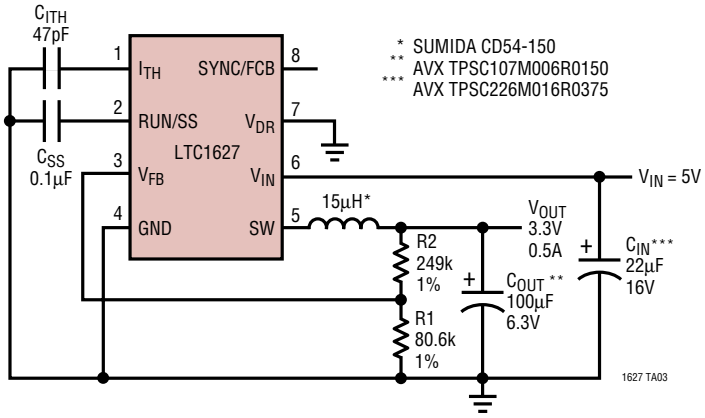

Double Lithium-Ion to 5V/0.5A Low Dropout Regulator

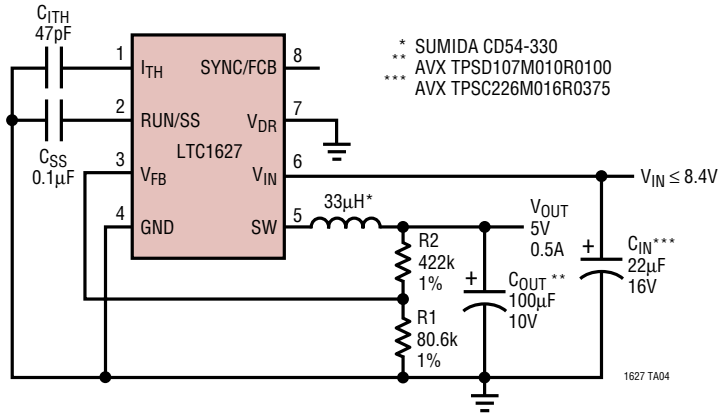

TYPICAL APPLICATIONS

3.3V Input to 2.5V/0.5A Regulator

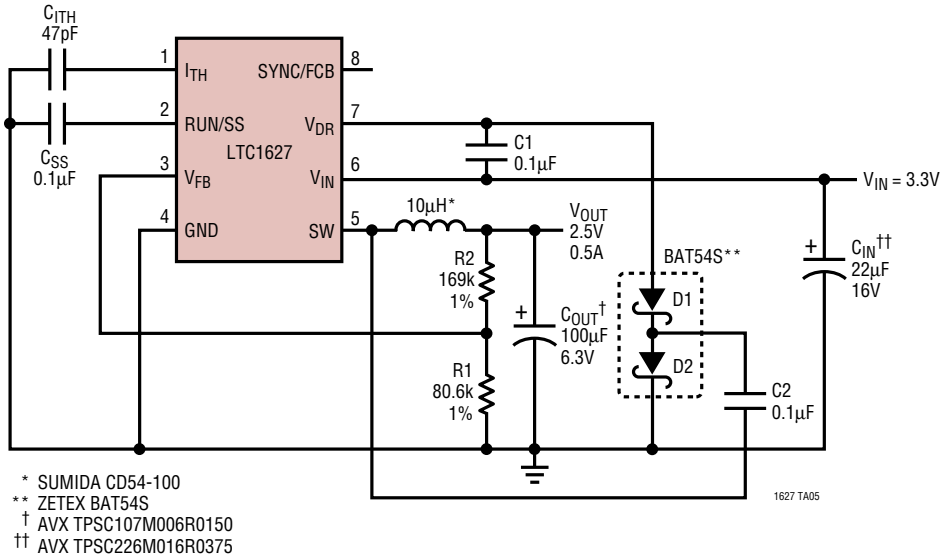

Single Lithium-Ion to 1.8V/0.3A Regulator

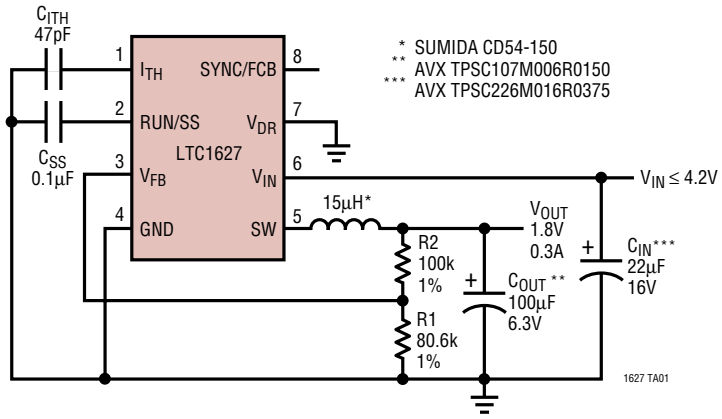

TYPICAL APPLICATIONS

Double Lithium-Ion to 2.5V/0.5A Regulator

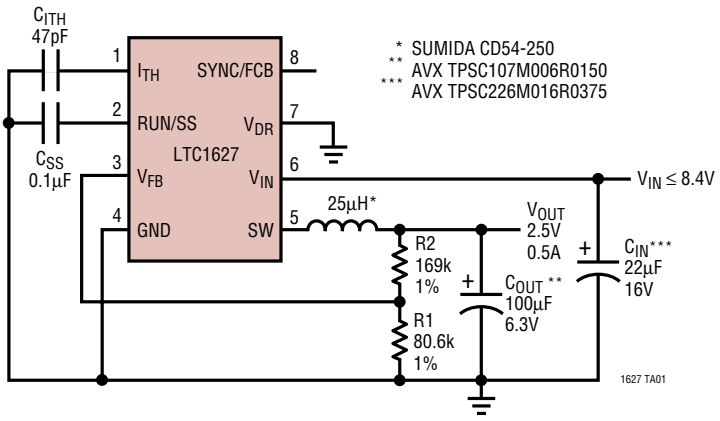

PACKAGE DESCRIPTION

Dimensions in inches (millimeters) unless otherwise noted.

S8 Package
8-Lead Plastic Small Outline (Narrow 0.150)
(LTC DWG # 05-08-1610)

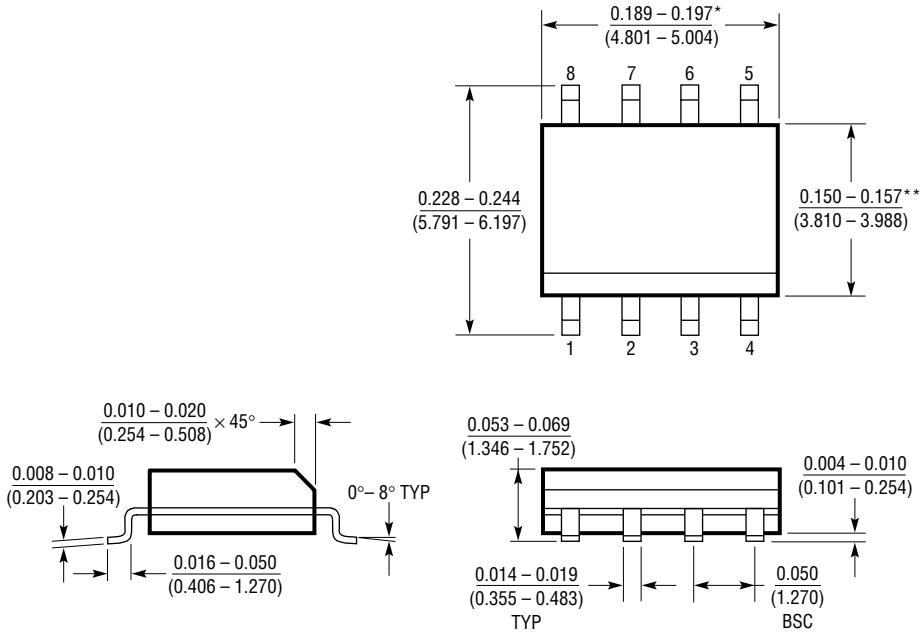

*DIMENSION DOES NOT INCLUDE MOLD FLASH. MOLD FLASH SHALL NOT EXCEED 0.006" (0.152mm) PER SIDE

**DIMENSION DOES NOT INCLUDE INTERLEAD FLASH. INTERLEAD FLASH SHALL NOT EXCEED 0.010" (0.254mm) PER SIDE

S08 1298

Information furnished by Linear Technology Corporation is believed to be accurate and reliable. However, no responsibility is assumed for its use. Linear Technology Corporation makes no representation that the interconnection of its circuits as described herein will not infringe on existing patent rights.

TYPICAL APPLICATIONS

Dual Output 1.8V/300mA and 3.3V/100mA Application

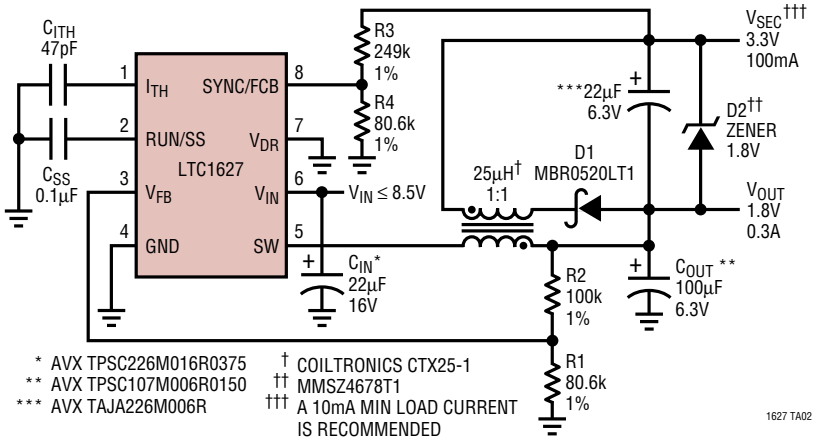

RELATED PARTS

PART NUMBER	DESCRIPTION	COMMENTS
LTC1174/LTC1174-3.3 LTC1174-5	High Efficiency Step-Down and Inverting DC/DC Converters	Monolithic Switching Regulators, I_{OUT} to 450mA, Burst Mode Operation
LTC1265	1.2A, High Efficiency Step-Down DC/DC Converter	Constant Off-Time, Monolithic, Burst Mode Operation
LT®1375/LT1376	1.5A, 500kHz Step-Down Switching Regulators	High Frequency, Small Inductor, High Efficiency
LTC1436A/LTC1436A-PLL	High Efficiency, Low Noise, Synchronous Step-Down Converters	24-Pin Narrow SSOP, Auxillary Output
LTC1474/LTC1475	Low Quiescent Current Step-Down DC/DC Converters	Monolithic, I_{OUT} to 250mA, I_Q = 10µA, 8-Pin MSOP
LTC1504A	Monolithic Synchronous Step-Down Switching Regulator	Low Cost, Voltage Mode I_{OUT} to 500mA, V_{IN} from 4V to 10V
LTC1622	Low Input Voltage Current Mode Step-Down DC/DC Controller	High Frequency, High Efficiency, 8-Pin MSOP
LTC1626	Low Voltage, High Efficiency Step-Down DC/DC Converter	Monolithic, Constant Off-Time, I_{OUT} to 600mA, Low Supply Voltage Range: 2.5V to 6V
LTC1701	Monolithic Current Mode Step-Down Switching Regulator	Constant Off-Time, I_{OUT} to 500mA, 1MHz Operation, V_{IN} from 2.5V to 5.5V
LTC1707	Monolithic Synchronous Step-Down Switching Regulator	1.19V V_{REF} Pin, Constant Frequency, I_{OUT} to 600mA, V_{IN} from 2.65V to 8.5V
LTC1735	High Efficiency Step-Down Converter	16-Pin SO and SSOP, V_{IN} Up to 36V, Fault Protection
LTC1772	Low Input Voltage Current Mode Step-Down DC/DC Controller	550kHz, 6-Pin SOT-23, I_{OUT} Up to 5A, V_{IN} from 2.2V to 10V
LTC1877	High Efficiency Monolithic Step-Down Regulator	550kHz, MS8, V_{IN} Up to 12V, I_Q = 10µA, I_{OUT} to 600mA
LTC1878	High Efficiency Monolithic Step-Down Regulator	550kHz, MS8, V_{IN} Up to 7V, I_Q = 10µA, I_{OUT} to 600mA

Linear Technology Corporation
1630 McCarthy Blvd., Milpitas, CA 95035-7417
(408)432-1900 • FAX: (408) 434-0507 • www.linear-tech.com
1627fa LTC/TP 0600 2K REV A • PRINTED IN USA
© LINEAR TECHNOLOGY CORPORATION 1998