Quad 12-Bit Rail-to-Rail Micropower DACs

FEATURES

- **Quad 12-Bit DAC**
- **Buffered True Rail-to-Rail Voltage Output**
- **Maximum DNL Error: 0.5LSB**
- 5V Operation, I_{CC}: 1.1mA Typ (LTC1458)
- 3V Operation, I_{CC}: 800µA Typ (LTC1458L)
- Internal or External Reference Operation
- Settling Time: 14µs to ±0.5LSB
- Schmitt Trigger On Clock Input Allows Direct Optocoupler Interface
- Power-On Reset and $\overline{CLR}$ Pin
- SSOP-28 Package
- 3-Wire Cascadable Serial Interface with 250kHz Update Rate
- Low Cost

APPLICATIONS

- Digital Calibration
- Industrial Process Control
- Automatic Test Equipment
- Low Power Systems

DESCRIPTION

The LTC®1458/LTC1458L are complete single supply, quad rail-to-rail voltage output, 12-bit digital-to-analog converters (DACs) in SO-28 and SSOP-28 packages. They include an output buffer amplifier with variable gain (×1 or ×2) and an easy-to-use 3-wire cascadable serial interface.

The LTC1458 has an onboard reference of 2.048V and a full-scale output of 4.095V in a ×2 gain configuration. It operates from a single 4.5V to 5.5V supply dissipating only 5.5mW (I_{CC} = 1.1mA typ).

The LTC1458L has an onboard 1.22V reference and a full-scale output of 2.5V in a ×2 gain configuration. It operates from a single supply of 2.7V to 5.5V dissipating 2.4mW.

Excellent DNL, low supply current and a wide range of built-in functions allow these parts to be used in a host of applications when flexibility, power and single supply operation are important.

LT, LTC and LT are registered trademarks of Linear Technology Corporation.

TYPICAL APPLICATION

Functional Block Diagram: Quad 12-Bit Rail-to-Rail DAC

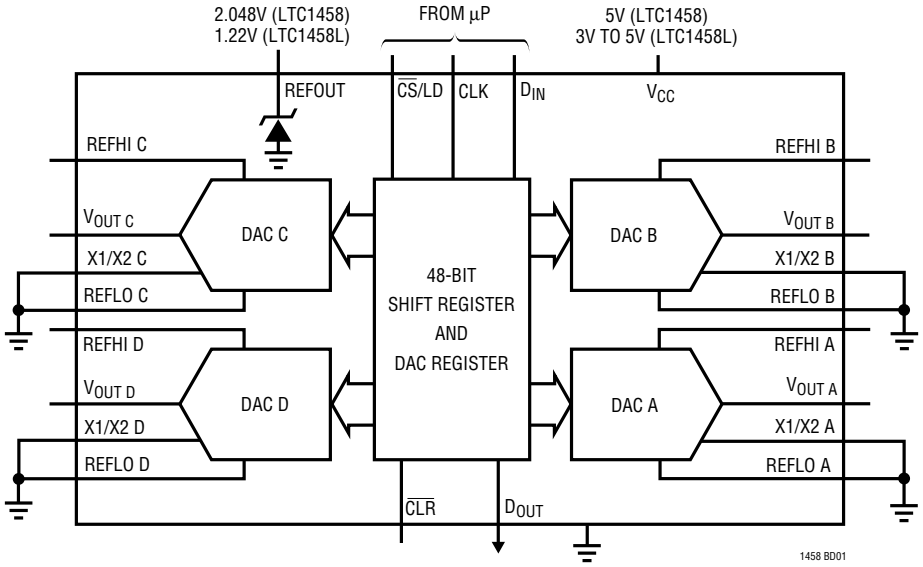

Differential Nonlinearity vs Input Code

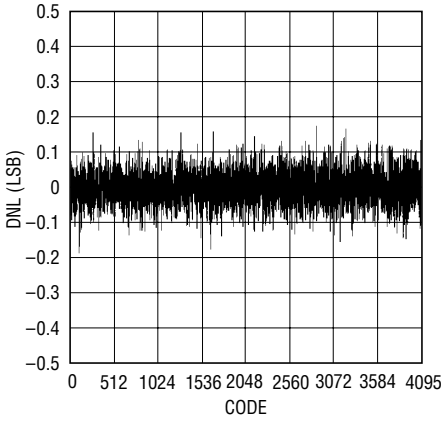

ABSOLUTE MAXIMUM RATINGS

(Note 1)

V_{CC} to GND ..... –0.5V to 7.5V
Logic Inputs to GND ..... –0.5V to 7.5V
$V_{OUT\ A}$, $V_{OUT\ B}$, $V_{OUT\ C}$, $V_{OUT\ D}$,
X1/X2 A, X1/X2 B, X1/X2 C,
X1/X2 D ..... –0.5V to V_{CC} + 0.5V
REFHI A, REFHI B, REFHI C, REFHI D,
REFLO A, REFLO B, REFLO C,
REFLO D ..... –0.5V to V_{CC} + 0.5V
Maximum Junction Temperature ..... 125°C
Operating Temperature Range
LTC1458C/LTC1458LC ..... 0°C to 70°C
LTC1458I/LTC1458LI ..... –40°C to 85°C
Storage Temperature Range ..... –65°C to 150°C
Lead Temperature (Soldering, 10 sec)..... 300°C

PACKAGE/ORDER INFORMATION

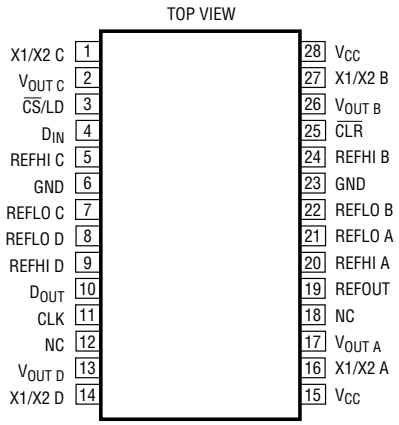

G PACKAGE
28-LEAD PLASTIC SSOP

SW PACKAGE
28-LEAD PLASTIC SO

T_{JMAX} = 125°C, θ_{JA} = 100°C/W (G)
T_{JMAX} = 125°C, θ_{JA} = 150°C/W (SW)

ORDER PART NUMBER
LTC1458CG
LTC1458CSW
LTC1458LCG
LTC1458LCSW
LTC1458IG
LTC1458ISW
LTC1458LIG
LTC1458LISW

Consult factory for Military grade parts.

ELECTRICAL CHARACTERISTICS

The ● denotes the specifications which apply over the full operating temperature range, otherwise specifications are at $T_A = T_{MIN}$ to T_{MAX}. V_{CC} = 4.5V to 5.5V (LTC1458), 2.7V to 5.5V (LTC1458L), X1/X2 = REFLO = GND, REFHI = REFOUT, V_{OUT} unloaded, unless otherwise noted.

SYMBOL	PARAMETER	CONDITIONS		MIN	TYP	MAX	UNITS
DAC							
	Resolution		●	12			Bits
DNL	Differential Nonlinearity	Guaranteed Monotonic (Note 2)	●			±0.5	LSB
INL	Integral Nonlinearity	T_A = 25°C (Note 2)	 ●		±1.75 ±2.25	±4.0 ±4.5	LSB LSB
V_{OS}	Offset Error	T_A = 25°C	 ●		±3.0 ±6.0	±12 ±18	mV mV
$V_{OS}TC$	Offset Error Temperature Coefficient				±15		µV/°C
V_{FS}	Full-Scale Voltage	When Using Internal Reference, LTC1458, T_A = 25°C LTC1458	 ●	4.065 4.045	4.095 4.095	4.125 4.145	V V
		When Using Internal Reference, LTC1458L, T_A = 25°C LTC1458L	 ●	2.470 2.460	2.500 2.500	2.530 2.540	V V
$V_{FS}TC$	Full-Scale Voltage Temperature Coefficient	When Using Internal Reference			±24		ppm/°C
Reference							
	Reference Output Voltage	LTC1458 LTC1458L	● ●	2.008 1.195	2.048 1.220	2.088 1.245	V V
	Reference Output Temperature Coefficient				±20		ppm/°C
	Reference Line Regulation		●		0.7	±2.0	LSB/V
	Reference Load Regulation	0 ≤ I_{OUT} ≤ 100µA, LTC1458 LTC1458L	● ●		0.2 0.6	1.5 3.0	LSB LSB
	Reference Input Range	$V_{REFHI} \le V_{CC} - 1.5V$			$V_{CC}/2$		V
	Reference Input Resistance		●	15	24	40	kΩ

ELECTRICAL CHARACTERISTICS

The ● denotes the specifications which apply over the full operating temperature range, otherwise specifications are at $T_A = T_{MIN}$ to T_{MAX}. V_{CC} = 4.5V to 5.5V (LTC1458), 2.7V to 5.5V (LTC1458L), X1/X2 = REFLO = GND, REFHI = REFOUT, V_{OUT} unloaded, unless otherwise noted.

SYMBOL	PARAMETER	CONDITIONS		MIN	TYP	MAX	UNITS
	Reference Input Capacitance				15		pF
	Short-Circuit Current	REFOUT Shorted to GND	●		45	120	mA
Power Supply							
V_{CC}	Positive Supply Voltage	For Specified Performance, LTC1458 LTC1458L	● ●	4.5 2.7		5.5 5.5	V V
I_{CC}	Supply Current	4.5V ≤ V_{CC} ≤ 5.5V (Note 5) , LTC1458 2.7V ≤ V_{CC} ≤ 5.5V (Note 5), LTC1458L	● ●		1100 800	2400 2000	µA µA
Op Amp DC Performance							
	Short-Circuit Current Low	V_{OUT} Shorted to GND	●		60	120	mA
	Short-Circuit Current High	V_{OUT} Shorted to V_{CC}	●		70	120	mA
	Output Impedance to GND	Input Code = 0	●		40	160	Ω
AC Performance							
	Voltage Output Slew Rate	(Note 3)	●	0.5	1.0		V/µs
	Voltage Output Settling Time	(Notes 3, 4) to ±0.5LSB			14		µs
	Digital Feedthrough				0.3		nV•s
	AC Feedthrough	REFHI = 1kHz, $2V_{P-P}$, (Code: All 0s)			–95		dB
SINAD	Signal-to-Noise + Distortion	REFHI = 1kHz, $2V_{P-P}$, (Code: All 1s)			85		dB

The ● denotes the specifications which apply over the full operating temperature range, otherwise specifications are at $T_A = T_{MIN}$ to T_{MAX}. V_{CC} = 5V (LTC1458), 3V (LTC1458L), unless otherwise noted.

SYMBOL	PARAMETER	CONDITIONS		LTC1458 MIN	LTC1458 TYP	LTC1458 MAX	LTC1458L MIN	LTC1458L TYP	LTC1458L MAX	UNITS
Digital I/O										
V_{IH}	Digital Input High Voltage		●	2.4			2.0			V
V_{IL}	Digital Input Low Voltage		●			0.8			0.6	V
V_{OH}	Digital Output High Voltage	I_{OUT} = –1mA	●	V_{CC} – 1.0			V_{CC} – 0.7			V
V_{OL}	Digital Output Low Voltage	I_{OUT} = 1mA	●			0.4			0.4	V
I_{LEAK}	Digital Input Leakage	V_{IN} = GND to V_{CC}	●			±10			±10	µA
C_{IN}	Digital Input Capacitance	Guaranteed by Design, Not Subject to Test	●			10			10	pF
Switching										
t_1	D_{IN} Valid to CLK Setup		●	40			60			ns
t_2	D_{IN} Valid to CLK Hold		●	0			0			ns
t_3	CLK High Time		●	40			60			ns
t_4	CLK Low Time		●	40			60			ns
t_5	$\overline{CS}$/LD Pulse Width		●	50			80			ns
t_6	LSB CLK to $\overline{CS}$/LD		●	40			60			ns
t_7	$\overline{CS}$/LD Low to CLK		●	20			30			ns
t_8	D_{OUT} Output Delay	C_{LOAD} = 15pF	●			150			220	ns
t_9	CLK Low to $\overline{CS}$/LD Low		●	20			30			ns

ELECTRICAL CHARACTERISTICS

Note 1: Absolute Maximum Ratings are those values beyond which the life of a device may be impaired.

Note 2: Nonlinearity is defined from the first code that is greater than or equal to the maximum offset specification to code 4095 (full scale).

Note 3: Load is 5kΩ in parallel with 100pF.

Note 4: DAC switched between all 1s and the code corresponding to V_{OS} for the part.

Note 5: Digital inputs at 0V or V_{CC}.

TYPICAL PERFORMANCE CHARACTERISTICS

LTC1458
Differential Nonlinearity (DNL)

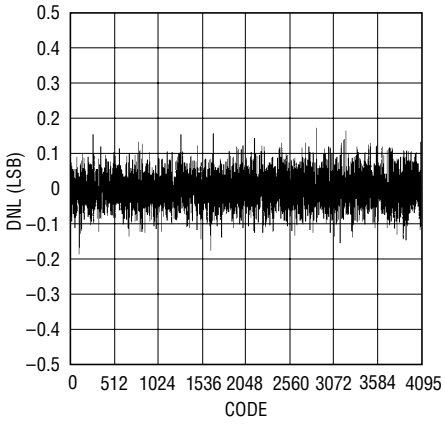

LTC1458
Integral Nonlinearity (INL)

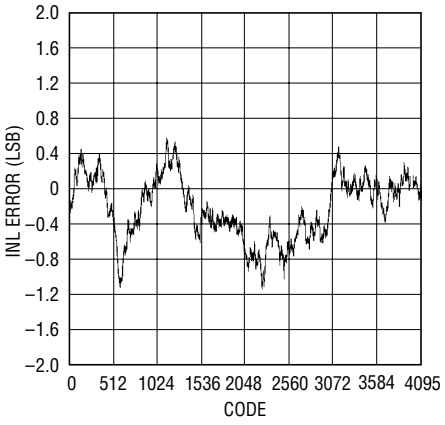

Minimum Supply Headroom for Full Output Swing vs Load Current

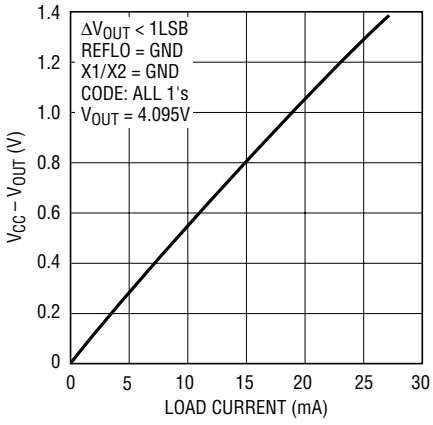

Minimum Output Voltage vs Output Sink Current

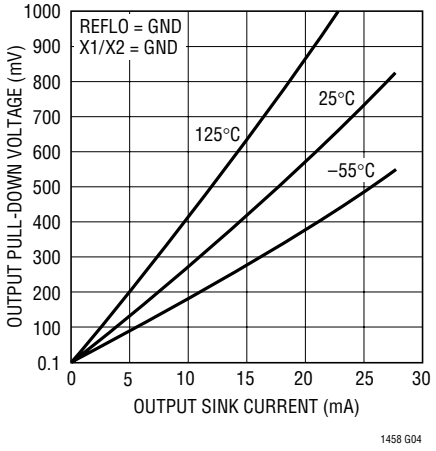

Output Swing vs Load Resistance

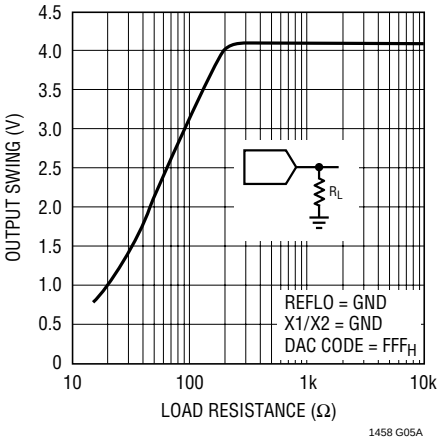

Output Swing vs Load Resistance

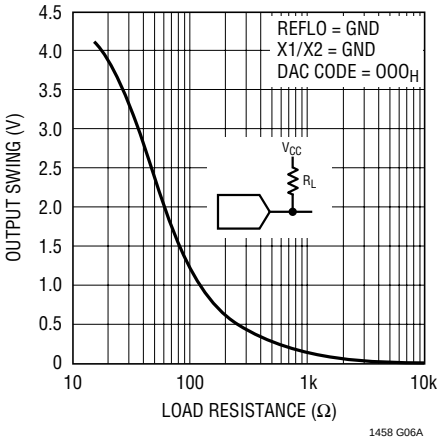

TYPICAL PERFORMANCE CHARACTERISTICS

LTC1458 Full-Scale Voltage vs Temperature

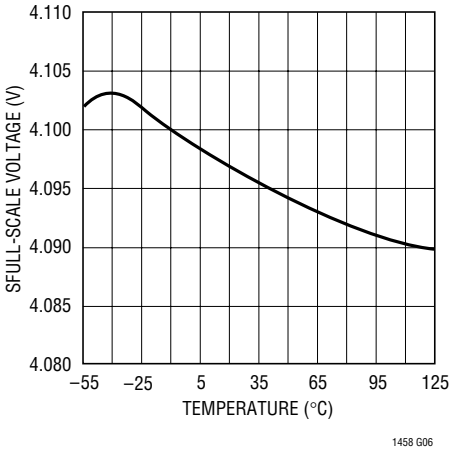

LTC1458 Offset Voltage vs Temperature

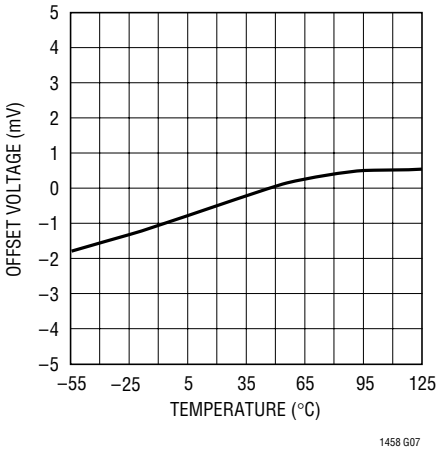

LTC1458 Supply Current vs Temperature

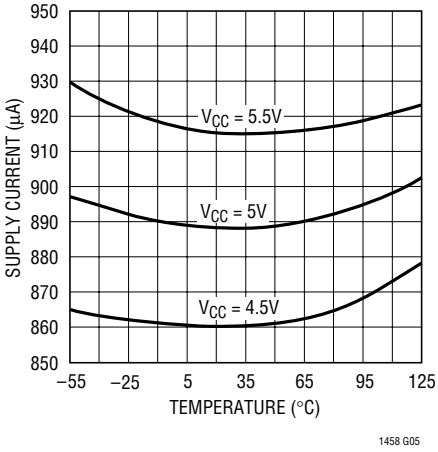

PIN FUNCTIONS

X1/X2 C, X1/X2 D,X1/X2 A, X1/X2 B (Pins 1, 14, 16, 27): The Input Pin that Sets the Gain for DAC C/D/A/B. When grounded the gain will be 2, i.e., output full-scale will be 2 • REFHI. When connected to V_{OUT} the gain will be 1, i.e., output full-scale will be equal to REFHI.

$V_{OUT\ C}$, $V_{OUT\ D}$, $V_{OUT\ A}$, $V_{OUT\ B}$ (Pins 2, 13, 17, 26): The Buffered DAC Outputs.

$\overline{CS}$/LD (Pin 3): The Serial Interface Enable and Load Control Input.

D_{IN} (Pin 4): The Serial Data Input.

REFHI C, REFHI D, REFHI A, REFHI B,(Pins 5, 9, 20, 24): The Inputs to the DAC Resistor Ladder for DAC C/D/A/B.

GND (Pins 6, 23): Ground.

REFLO C, REFLO D, REFLO A, REFLO B, (Pins 7, 8, 21, 22): The Bottom of the DAC Resistor Ladders for the DACs. These can be used to offset zero-scale above ground. REFLO should be connected to ground when no offset is required.

D_{OUT} (Pin 10): The Output of the Shift Register which Becomes Valid on the Rising Edge of the Serial Clock.

CLK (Pin 11): The Serial Interface Clock Input.

V_{CC} (Pins 15, 28): The Positive Supply Input. $4.5V \leq V_{CC} \leq 5.5V$ (LTC1458), $2.7V \leq V_{CC} \leq 5.5V$ (LTC1458L). Requires a 0.1µF bypass capacitor to ground.

REFOUT (Pin 19): The Output of the Internal Reference.

$\overline{CLR}$ (Pin 25): The Clear Pin. Clears all DACs to zero-scale when pulled low.

BLOCK DIAGRAM

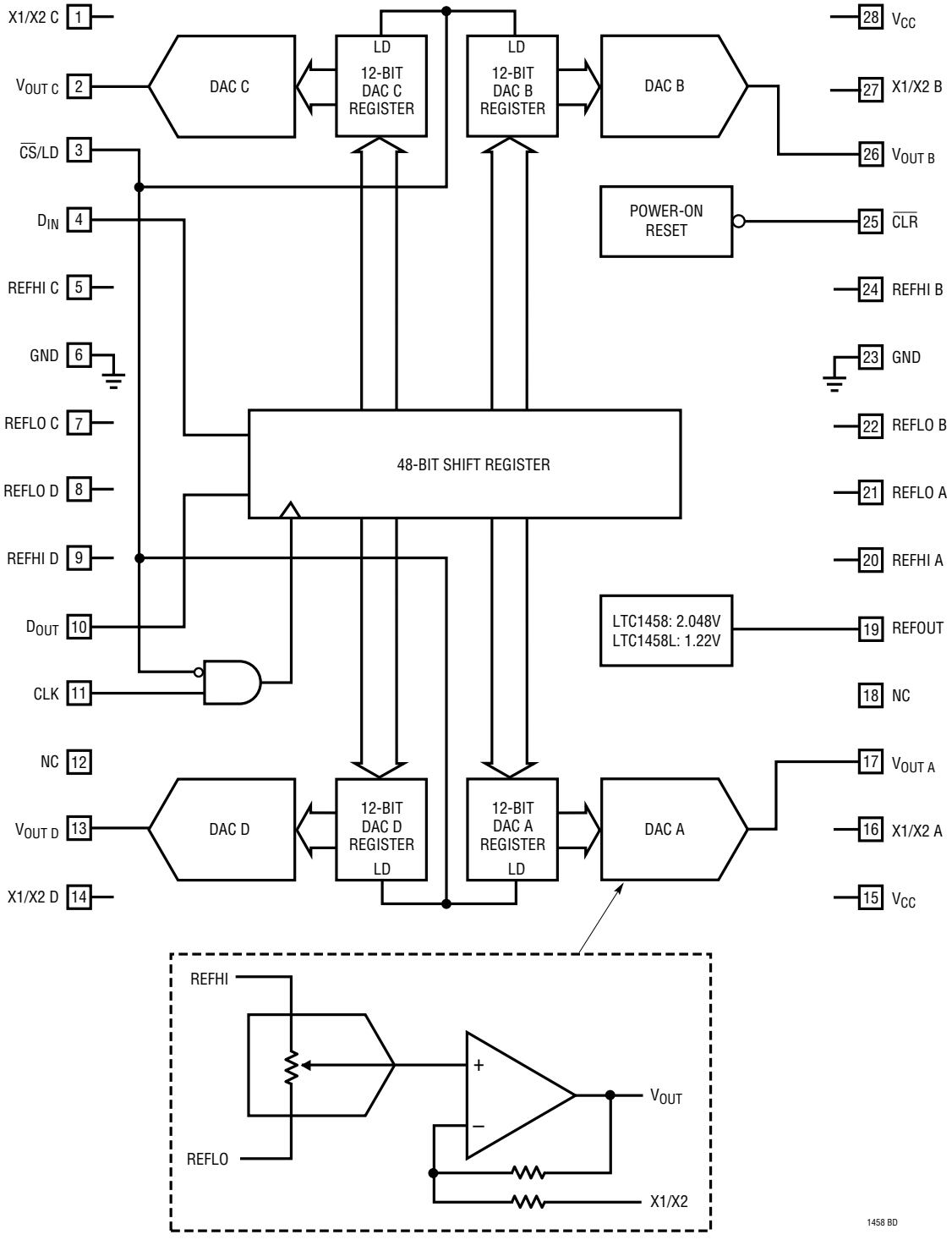

TIMING DIAGRAM

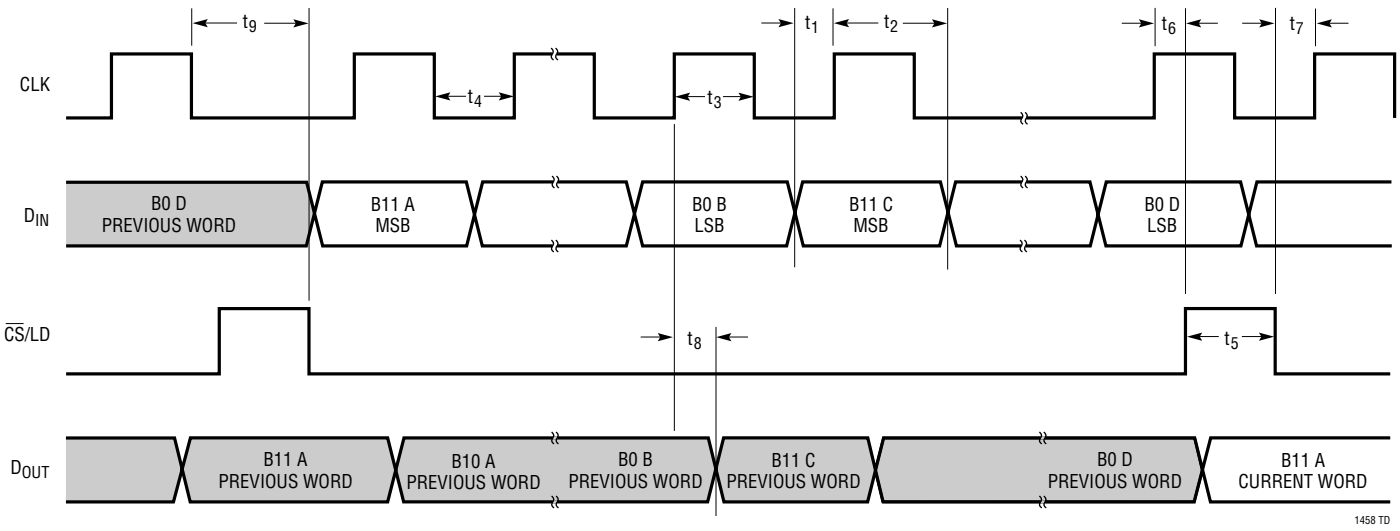

DEFINITIONS

Resolution (n): Resolution is defined as the number of digital input bits, n. It defines the number of DAC output states (2^n) that divide the full-scale range. The resolution does not imply linearity.

Full-Scale Voltage (V_{FS}): This is the output of the DAC when all bits are set to 1.

Voltage Offset Error (V_{OS}): The theoretical voltage at the output when the DAC is loaded with all zeros. The output amplifier can have a true negative offset, but because the part is operated from a single supply, the output cannot go below zero. If the offset is negative, the output will remain near 0V resulting in the transfer curve shown in Figure 1.

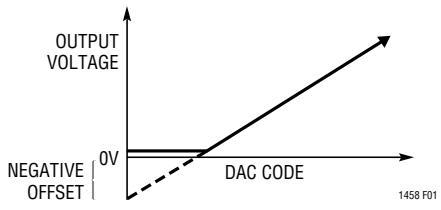

Figure 1. Effect of Negative Offset

The offset of the part is measured at the code that corresponds to the maximum offset specification:

$$V_{OS} = V_{OUT} - [(Code)(V_{FS})/(2^n - 1)]$$

Least Significant Bit (LSB): One LSB is the ideal voltage difference between two successive codes.

$$LSB = (V_{FS} - V_{OS})/(2^n - 1) = (V_{FS} - V_{OS})/4095$$

Nominal LSBs:

LTC1458 LSB = 4.095V/4095 = 1mV
LTC1458L LSB = 2.5V/4095 = 0.610mV

Integral Nonlinearity (INL): End-point INL is the maximum deviation from a straight line passing through the end-points of the DAC transfer curve. Because the part operates from a single supply and the output cannot go below zero, the linearity is measured between full scale and the code corresponding to the maximum offset specification. The INL error at a given input code is calculated as follows:

$INL = [V_{OUT} - V_{OS} - (V_{FS} - V_{OS})(code/4095)]/LSB$
V_{OUT} = The output voltage of the DAC measured at the given input code

DEFINITIONS

Differential Nonlinearity (DNL): DNL is the difference between the measured change and the ideal 1LSB change between any two adjacent codes. The DNL error between any two codes is calculated as follows:

DNL = (ΔV_{OUT} – LSB)/LSB
ΔV_{OUT} = The measured voltage difference between two adjacent codes

Digital Feedthrough: The glitch that appears at the analog output caused by AC coupling from the digital inputs when they change state. The area of the glitch is specified in (nV)(sec).

OPERATION

Serial Interface

The data on the D_{IN} input is loaded into the shift register on the rising edge of the clock. Data is loaded as one 48-bit word, DAC A first, then DAC B, DAC C and DAC D. The MSB is loaded first for each DAC. The DAC registers load the data from the shift register when $\overline{CS}$/LD is pulled high. The CLK is disabled internally when $\overline{CS}$/LD is high. Note: CLK must be low before $\overline{CS}$/LD is pulled low to avoid an extra internal clock pulse.

The buffered output of the 48-bit shift register is available on the D_{OUT} pin which swings from ground to V_{CC}.

Multiple LTC1458/LTC1458Ls may be daisy-chained together by connecting the D_{OUT} pin to the D_{IN} pin of the next chip, while the CLK and $\overline{CS}$/LD signals remain common to all chips in the daisy-chain. The serial data is clocked to all of the chips, then the $\overline{CS}$/LD signal is pulled high to update all of them simultaneously.

Reference

The LTC1458L has an internal reference of 1.22V with a full scale of 2.5V (gain of 2 configuration). The LTC1458 includes an internal 2.048V reference, making 1LSB equal to 1mV (gain of 2 configuration). When the buffer gain is 2, the external reference must be less than $V_{CC}/2$ and be capable of driving the 15k minimum DAC resistor ladder. The external reference must always be less than V_{CC} – 1.5V. The reference output voltage noise spectral density at 1kHz is 300nV/$\sqrt{Hz}$.

Voltage Output

The rail-to-rail buffered output of the LTC1458 family can source or sink 5mA when operating with a 5V supply over the entire operating temperature range while pulling to within 300mV of the positive supply voltage or ground. The output swings to within a few millivolts of either supply rail when unloaded and has an equivalent output resistance of 40Ω when driving a load to the rails. The output can drive 1000pF without going into oscillation. The output voltage noise spectral density at 1kHz is 600nV/$\sqrt{Hz}$.

APPLICATIONS INFORMATION

Using Two DACs to Digitally Program the Full Scale and Offset of a Third

Figure 2 shows how to use one LTC1458 to make a 12-bit DAC with a digitally programmable full scale and offset. DAC A and DAC B are used to control the offset and full scale of DAC C. DAC A is connected in a ×1 configuration and controls the offset of DAC C by moving REFLO C above ground. The minimum value to which this offset can be programmed is 10mV. DAC B is connected in a ×2 configuration and controls the full scale of DAC C by driving REFHI C. Note that the voltage at REFHI C must be less than or equal to $V_{CC}/2$, corresponding to DAC B's code ≤ 2,500 for V_{CC} = 5V, since DAC C is being operated in × 2 mode for full rail-to-rail output swing.

The transfer characteristic is:

$$V_{OUTC} = 2 \bullet [D_C \bullet (2 \bullet D_B - D_A) + D_A] \bullet REFOUT$$

where REFOUT = The Reference Output

D_A = (DAC A Digital Code)/4096
This sets the offset.

D_B = (DAC B Digital Code)/4096
This sets the full scale.

D_C = (DAC C Digital Code)/4096

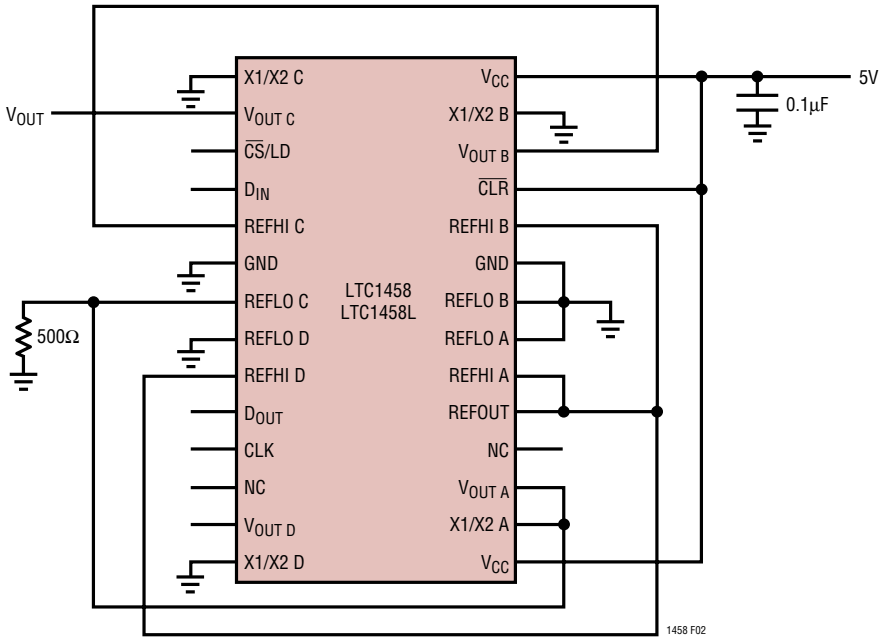

Figure 2

PACKAGE DESCRIPTION

Dimensions in inches (millimeters) unless otherwise noted.

G Package
28-Lead Plastic SSOP (0.209)
(LTC DWG # 05-08-1640)

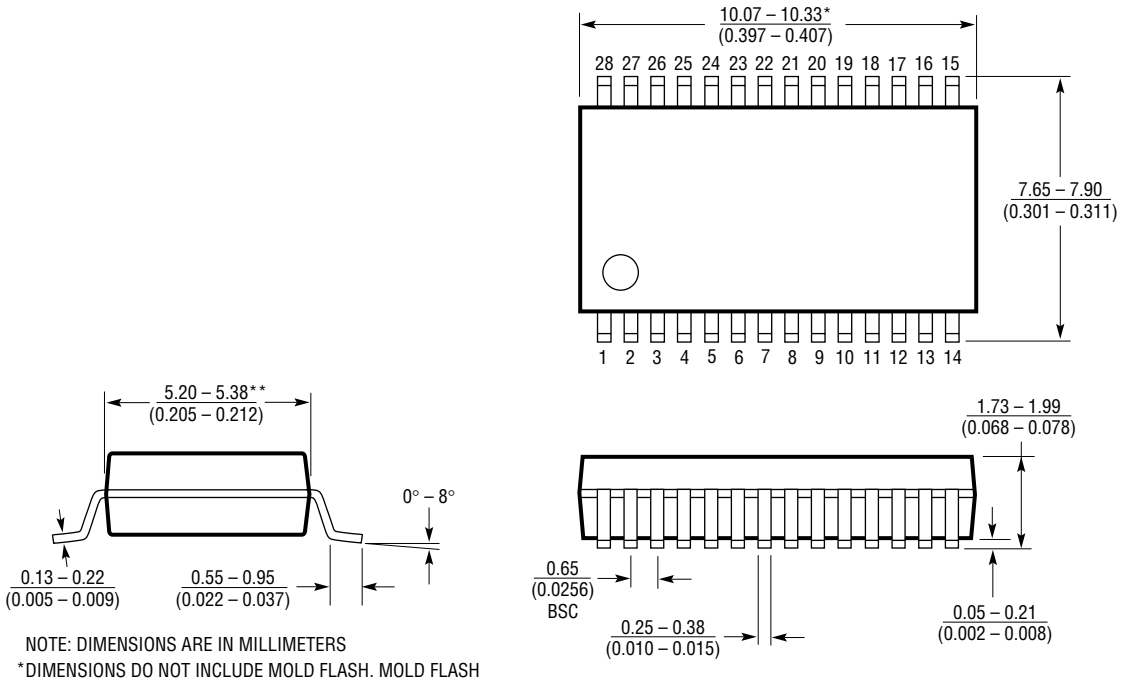

NOTE: DIMENSIONS ARE IN MILLIMETERS

*DIMENSIONS DO NOT INCLUDE MOLD FLASH. MOLD FLASH SHALL NOT EXCEED 0.152mm (0.006") PER SIDE

**DIMENSIONS DO NOT INCLUDE INTERLEAD FLASH. INTERLEAD FLASH SHALL NOT EXCEED 0.254mm (0.010") PER SIDE

G28 SSOP 1098

PACKAGE DESCRIPTION

Dimensions in inches (millimeters) unless otherwise noted.

SW Package
28-Lead Plastic Small Outline (Wide 0.300)
(LTC DWG # 05-08-1620)

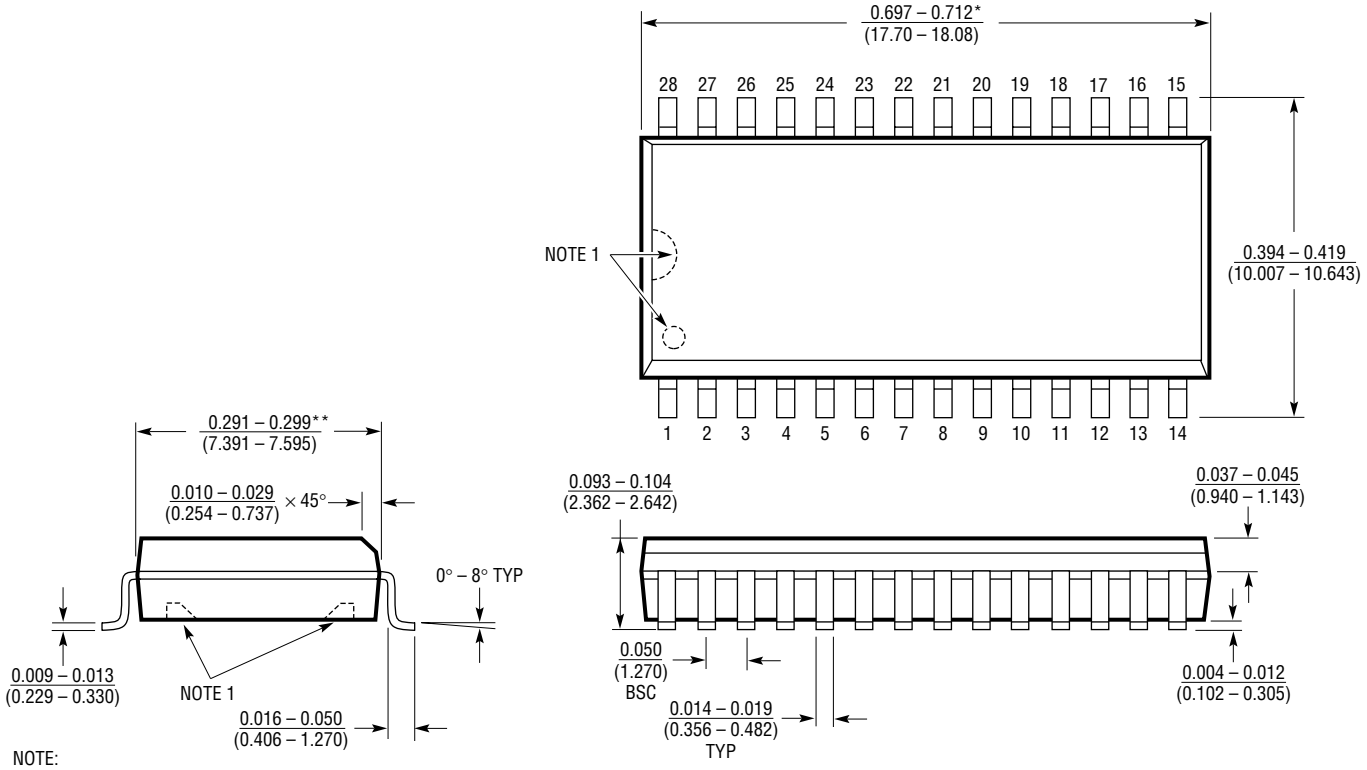

NOTE:
1. PIN 1 IDENT, NOTCH ON TOP AND CAVITIES ON THE BOTTOM OF PACKAGES ARE THE MANUFACTURING OPTIONS. THE PART MAY BE SUPPLIED WITH OR WITHOUT ANY OF THE OPTIONS

*DIMENSION DOES NOT INCLUDE MOLD FLASH. MOLD FLASH SHALL NOT EXCEED 0.006" (0.152mm) PER SIDE

**DIMENSION DOES NOT INCLUDE INTERLEAD FLASH. INTERLEAD FLASH SHALL NOT EXCEED 0.010" (0.254mm) PER SIDE

Information furnished by Linear Technology Corporation is believed to be accurate and reliable. However, no responsibility is assumed for its use. Linear Technology Corporation makes no representation that the interconnection of its circuits as described herein will not infringe on existing patent rights.

TYPICAL APPLICATION

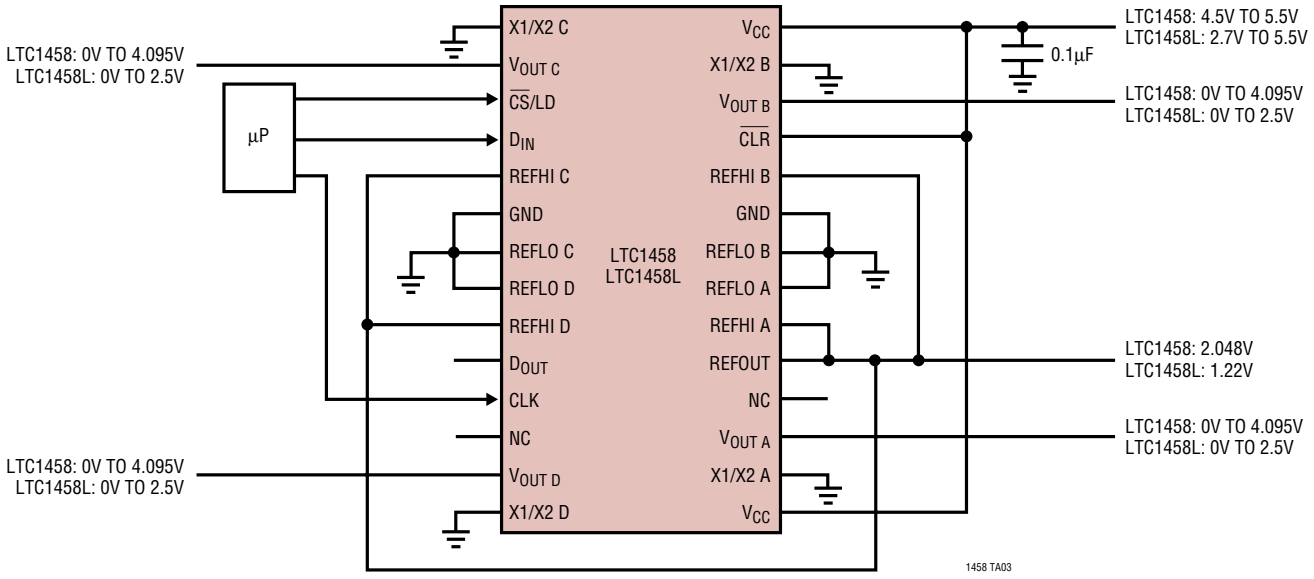

RELATED PARTS

PART NUMBER	DESCRIPTION	COMMENTS
LTC1257	Single 12-Bit V_{OUT} DAC, Full Scale: 2.048V, V_{CC}: 4.75V to 15.75V, Reference Can Be Overdriven up to 12V, i.e., FS_{MAX} = 12V	5V to 15V Single Supply, Complete V_{OUT} DAC in SO-8 Package
LTC1446/LTC1446L	Dual 12-Bit Rail-to-Rail Output DACs in SO-8 Package	LTC1446: V_{CC} = 4.5V to 5.5V, V_{OUT} = 0V to 4.095V LTC1446L: V_{CC} = 2.7V to 5.5V, V_{OUT} = 0V to 2.5V
LTC1450/LTC1450L	Single 12-Bit Rail-to-Rail Output DACs with Parallel Interface	LTC1450: V_{CC} = 4.5V to 5.5V, V_{OUT} = 0V to 4.095V LTC1450L: V_{CC} = 2.7V to 5.5V, V_{OUT} = 0V to 2.5V
LTC1451	Single Rail-to-Rail 12-Bit DAC, Full Scale: 4.095V, V_{CC}: 4.5V to 5.5V	Low Power, Complete V_{OUT} DAC in SO-8 Package
LTC1452	Single Rail-to-Rail 12-Bit V_{OUT} Multiplying DAC, V_{CC}: 2.7V to 5.5V	Low Power, Multiplying V_{OUT} DAC with Rail-to-Rail Buffer Amplifier in SO-8 Package
LTC1453	Single Rail-to-Rail 12-Bit V_{OUT} DAC, Full Scale: 2.5V, V_{CC}: 2.7V to 5.5V	3V, Low Power, Complete V_{OUT} DAC in SO-8 Package
LTC1454/LTC1454L	Dual 12-Bit V_{OUT} DACs in SO-16 Package with Added Functionality	LTC1454: V_{CC} = 4.5V to 5.5V, V_{OUT} = 0V to 4.095V LTC1454L: V_{CC} = 2.7V to 5.5V, V_{OUT} = 0V to 2.5V
LTC1456	Single Rail-to-Rail Output 12-Bit DAC with Clear Pin, Full Scale: 4.095V, V_{CC}: 4.5V to 5.5V	Low Power, Complete V_{OUT} DAC in SO-8 Package with Clear Pin
LTC1655/LTC1655L	Single 16-Bit V_{OUT} DAC with Serial Interface in SO-8	V_{CC} = 5V (3V), Low Power, Deglitched, V_{OUT} = 0V to 4.096V (0V to 2.5V)
LTC1661	Dual 10-Bit V_{OUT} DAC in 8-Lead MSOP Package	V_{CC} = 2.7V to 5.5V Micropower, Rail-to-Rail Output
LTC1662	Ultralow Power, Dual 10-Bit DAC in 8-Lead MSOP Package	1.5µA I_{CC} per DAC, 2.7V to 5.5V Supply Range
LTC1664	Quad 10-Bit V_{OUT} DAC in 16-Pin Narrow SSOP	Pin Compatible with the LTC1660, 2.7V to 5.5V Supply Range
LTC1665/LTC1660	Octal 8/10-Bit V_{OUT} DAC in 16-Pin Narrow SSOP	V_{CC} = 2.7V to 5.5V, Micropower, Rail-to-Rail Output

Linear Technology Corporation
1630 McCarthy Blvd., Milpitas, CA 95035-7417
(408)432-1900 • FAX: (408) 434-0507 • www.linear-tech.com
14588lfa LT/LCG 0700 2K REV A • PRINTED IN USA
© LINEAR TECHNOLOGY CORPORATION 1996