12V, 30mA Flash Memory Programming Supply

FEATURES

- Regulated 12V ±5% Output Voltage
- **No Inductors**
- Supply Voltage Range: 4.75V to 5.5V
- **Guaranteed 30mA Output**
- **Low Power: I_{CC} = 500µA**
- I_{CC} in Shutdown: 0.5µA
- 8-Pin PDIP or SO-8 Package

APPLICATIONS

- 12V Flash Memory Programming Supplies
- Compact 12V Op Amp Supplies
- Battery-Powered Systems

DESCRIPTION

The LTC®1262 is a regulated 12V, 30mA output DC/DC converter. It is designed to provide the 12V ±5% output necessary to program byte-wide flash memories. The output will provide up to 30mA from input voltages as low as 4.75V without using any inductors. Only four external capacitors are required to complete an extremely small surface mountable circuit.

The TTL compatible shutdown pin can be directly connected to a microprocessor and reduces the supply current to less than 0.5µA. The LTC1262 offers improved shutdown current performance and requires fewer external components than competing solutions.

The LTC1262 is available in an 8-pin PDIP or SO-8 package.

LT, LTC and LT are registered trademarks of Linear Technology Corporation.

TYPICAL APPLICATION

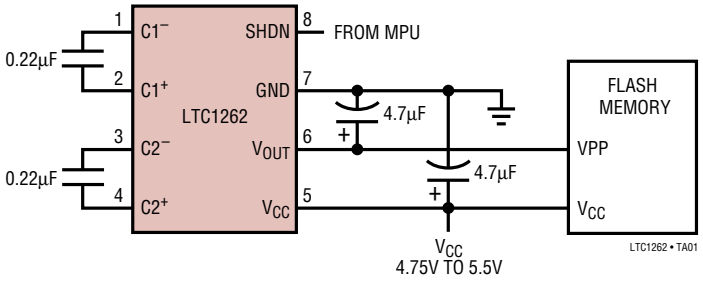

In/Out of Shutdown

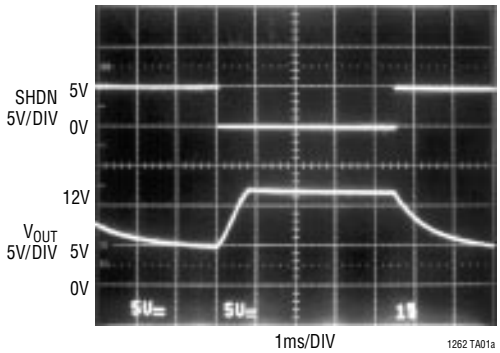

ABSOLUTE MAXIMUM RATINGS

(Note 1)

Supply Voltage (V_{CC}) 6V
Input Voltage (SHDN) ..... $-0.3V$ to $V_{CC} + 0.3V$
Output Current (I_{OUT}) 50mA
Operating Temperature Range
LTC1262C ..... 0°C to 70°C
LTC1262I ..... –40°C to 85°C
Storage Temperature Range ..... –65°C to 150°C
Lead Temperature (Soldering, 10 sec) ..... 300°C

PACKAGE/ORDER INFORMATION

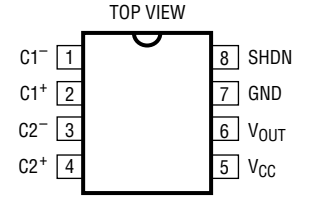

N8 PACKAGE
8-LEAD PDIP

S8 PACKAGE
8-LEAD PLASTIC SO

T_{JMAX} = 150°C, θ_{JA} = 100°C/W (N8)
T_{JMAX} = 150°C, θ_{JA} = 150°C/W (S8)

ORDER PART NUMBER
LTC1262CN8 LTC1262CS8 LTC1262IS8
S8 PART MARKING
1262 1262I

Consult factory for Military grade parts.

ELECTRICAL CHARACTERISTICS

V_{CC} = 4.75V to 5.5V, T_A = –40°C to 85°C, (Notes 2, 3), unless otherwise noted.

SYMBOL	PARAMETER	CONDITIONS		MIN	TYP	MAX	UNITS
V_{OUT}	Output Voltage	0mA ≤ I_{OUT} ≤ 30mA, V_{SHDN} = 0V, 0°C ≤ T_A ≤ 70°C 0mA ≤ I_{OUT} ≤ 30mA, V_{SHDN} = 0V, –40°C ≤ T_A ≤ 85°C	● ●	11.4 11.2		12.6 12.6	V V
I_{CC}	Supply Current	No Load, V_{SHDN} = 0V, 0°C ≤ T_A ≤ 70°C No Load, V_{SHDN} = 0V, –40°C ≤ T_A ≤ 85°C	● ●		0.5 0.5	1.0 1.3	mA mA
I_{SHDN}	Shutdown Supply Current	No Load, V_{SHDN} = V_{CC}	●		0.5	10	µA
f_{OSC}	Oscillator Frequency	V_{CC} = 5V, I_{OUT} = 30mA	●		300		kHz
	Power Efficiency	V_{CC} = 5V, I_{OUT} = 30mA	●		74		%
R_{SW}	V_{CC} to V_{OUT} Switch Impedance	V_{CC} = V_{SHDN} = 5V, I_{OUT} = 0mA	●		0.18	2	kΩ
V_{IH}	SHDN Input High Voltage		●	2.4			V
V_{IL}	SHDN Input Low Voltage		●			0.8	V
	SHDN Input Current	V_{CC} = 5V, V_{SHDN} = 0V, 0°C ≤ T_A ≤ 70°C V_{CC} = 5V, V_{SHDN} = 0V, –40°C ≤ T_A ≤ 85°C V_{CC} = 5V, V_{SHDN} = 5V	● ● ●	–20 –35	–10 –10 0.06	–5 –5 10	µA µA µA
t_{ON}	Turn-On Time	C1 = C2 = 0.22µF, C_{IN} = C_{OUT} = 4.7µF, (Figures 1, 2)			500		µs
t_{OFF}	Turn-Off Time	C1 = C2 = 0.22µF, C_{IN} = C_{OUT} = 4.7µF, (Figures 1, 2)			3.3		ms

The ● denotes specifications which apply over the full operating temperature range.

Note 1: Absolute maximum ratings are those values beyond which the life of the device may be impaired.

Note 2: All currents into device pins are positive; all currents out of device pins are negative. All voltages are referenced to ground unless otherwise specified.

Note 3: All typicals are given at V_{CC} = 5V, T_A = 25°C.

TYPICAL PERFORMANCE CHARACTERISTICS

Efficiency vs Output Current

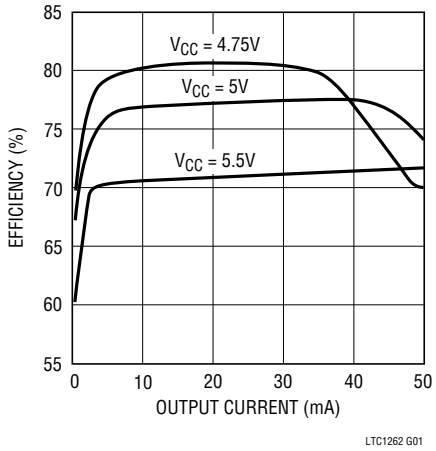

Shutdown Supply Current vs Temperature

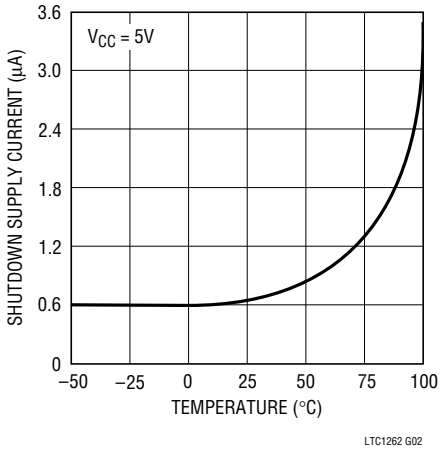

Supply Current vs Supply Voltage

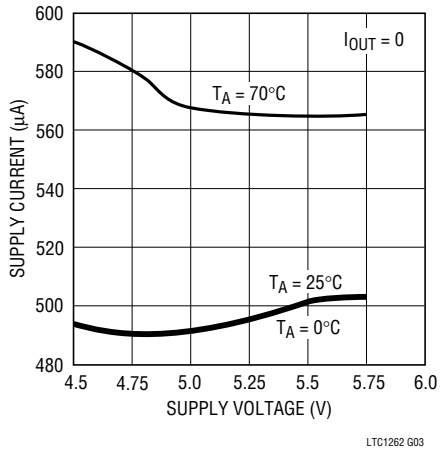

Output Voltage vs Output Current

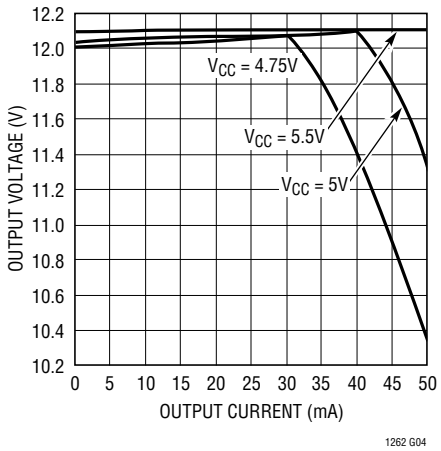

PIN FUNCTIONS

C1⁻ (Pin 1): C1 Negative Input. Connect a 0.22µF capacitor C1 between C1⁺ and C1⁻.

C1⁺ (Pin 2): C1 Positive Input. Connect a 0.22µF capacitor C1 between C1⁺ and C1⁻.

C2⁻ (Pin 3): C2 Negative Input. Connect a 0.22µF capacitor C2 between C2⁺ and C2⁻.

C2⁺ (Pin 4): C2 Positive Input. Connect a 0.22µF capacitor C2 between C2⁺ and C2⁻.

V_{CC} (Pin 5): Positive Supply Input Where 4.75V ≤ V_{CC} ≤ 5.5V. Connect a 4.7µF bypass capacitor C_{IN} to ground.

V_{OUT} (Pin 6): 12V Output. Connect a 4.7µF bypass capacitor C_{OUT} to ground. When in the shutdown mode V_{OUT} = V_{CC}.

GND (Pin 7): Ground.

SHDN (Pin 8): Logic Level Shutdown Pin. Application of a logic low at SHDN pin will place the regulator in normal operation. With no external connection, or with SHDN tied to V_{CC}, the device will be put into shutdown mode. Connect to GND for normal operation. In shutdown mode the charge pump is turned off and V_{OUT} = V_{CC}.

BLOCK DIAGRAM

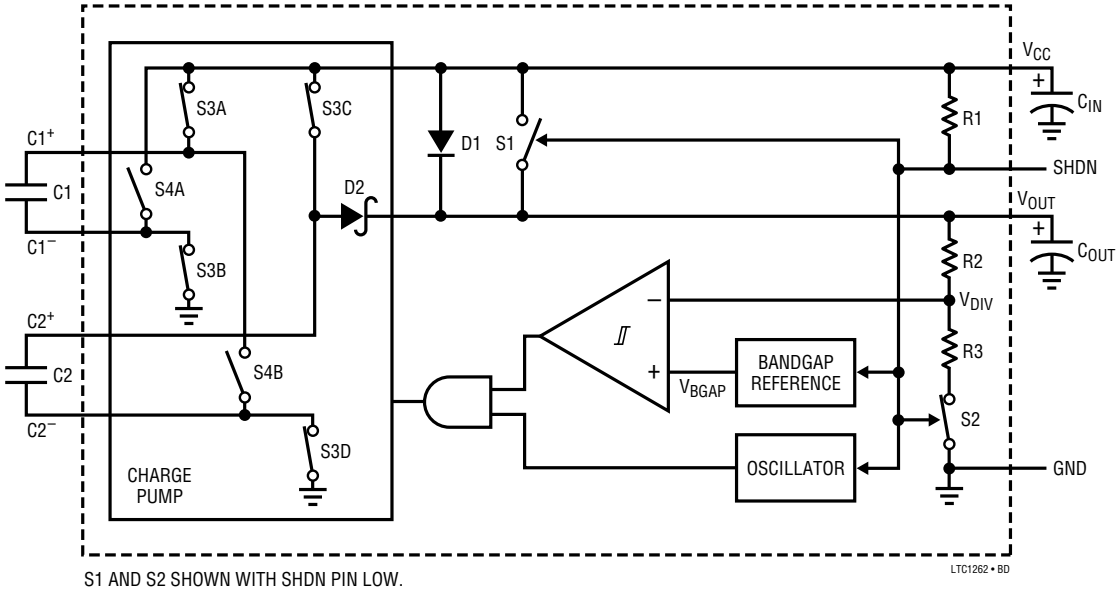

S1 AND S2 SHOWN WITH SHDN PIN LOW.
S3A, S3B, S3C, S3D, S4A AND S4B SHOWN WITH OSCILLATOR OUTPUT LOW AND $V_{DIV} < V_{BGAP} – V_{HYST}$.
COMPARATOR HYSTERISIS IS $\pm V_{HYST}$.

TIMING DIAGRAMS

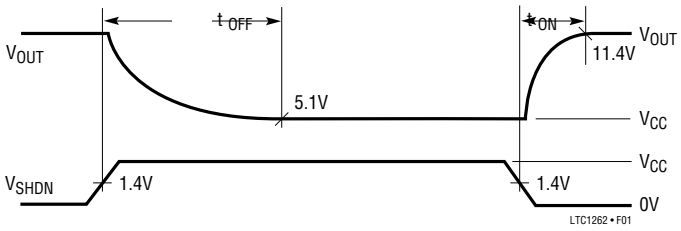

Figure 1. LTC1262 Timing Diagram

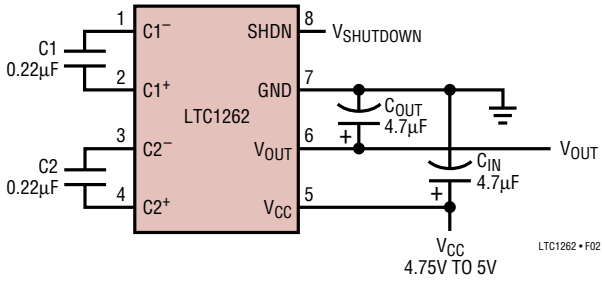

Figure 2. LTC1262 Timing Circuit

APPLICATIONS INFORMATION

Operation

The LTC1262 uses a charge pump tripler to generate 12V from a V_{CC} of 5V. The charge pump operates when clocked by a 300kHz oscillator. When the oscillator output is low, C1 and C2 are connected between V_{CC} and GND, charging them to V_{CC}. When the oscillator output goes high, C1 and C2 are stacked in series with the bottom plate of C1 pulled to V_{CC}. The top plate of C2 is switched to charge C_{OUT} and V_{OUT} rises. V_{OUT} is regulated to within 5% of 12V by an oscillator pulse gating scheme. A resistor divider senses V_{OUT}. When the output of the divider (V_{DIV}) is less than the output of a bandgap (V_{BGAP}) by the hysteresis voltage (V_{HYST}) of the comparator, oscillator pulses are applied to the charge pump to raise V_{OUT}. When V_{DIV} is above V_{BGAP} by V_{HYST}, the oscillator pulses are prevented from clocking the charge pump. V_{OUT} drops until V_{DIV} is below V_{BGAP} by V_{HYST} again. The gates of all internal switches are driven between V_{OUT} and GND. An internal diode ensures that the LTC1262 will start up under load by charging C_{OUT} to one diode drop below V_{CC}.

To reduce supply current the LTC1262 may be put into shutdown mode by floating the SHDN pin or taking it to V_{CC}. In this mode the bandgap, comparator, oscillator and resistor divider are switched off to reduce supply current to typically 0.5μA. At the same time an internal switch shorts V_{OUT} to V_{CC}; V_{OUT} takes 3.3ms to reach 5.1V (see t_{OFF} in Figure 1). When the SHDN pin is low, the LTC1262 exits shutdown and the charge pump operates to raise V_{OUT} to 12V. V_{OUT} takes 500μs to reach the lower regulation limit of 11.4V (see t_{ON} in Figure 1).

Choice of Capacitors

The LTC1262 is tested with the capacitors shown in Figure 2. C1 and C2 are 0.22μF ceramic capacitors and C_{IN} and C_{OUT} are 4.7μF tantalum capacitors. Refer to Table 1 if other choices are desired.

Table 1. Recommended Capacitor Types and Values

CAPACITOR	CERAMIC	TANTALUM	ALUMINUM
C1, C2	0.22μF to 1μF	Not Recommended	Not Recommended
C_{OUT}	2μF (Min)	4.7μF (Min)	10μF (Min)
C_{IN}	1μF (Min)	4.7μF (Min)	10μF (Min)

C1 and C2 should be ceramic capacitors with values in the range of 0.22μF to 1μF. Higher values provide better load regulation. Tantalum capacitors are not recommended as the higher ESR of these capacitors degrades performance when the load current is above 25mA with V_{CC} = 4.75V.

C_{IN} and C_{OUT} can be ceramic, tantalum or electrolytic capacitors. The ESR of C_{OUT} introduces steps in the V_{OUT} waveform whenever the charge pump charges C_{OUT}. This tends to increase V_{OUT} ripple. Ceramic or tantalum capacitors are recommended for C_{OUT} if minimum ripple is desired. The LTC1262 does not require a 0.1μF capacitor between V_{CC} and V_{OUT} for stability.

Maximum Load Current

The LTC1262 will source up to 50mA continuously without any damage to itself. **Do not short the V_{OUT} pin to ground**. If the V_{OUT} pin is shorted to ground, irreversible damage to the device will result.

TYPICAL APPLICATION

5V to 3.3V/10A Converter

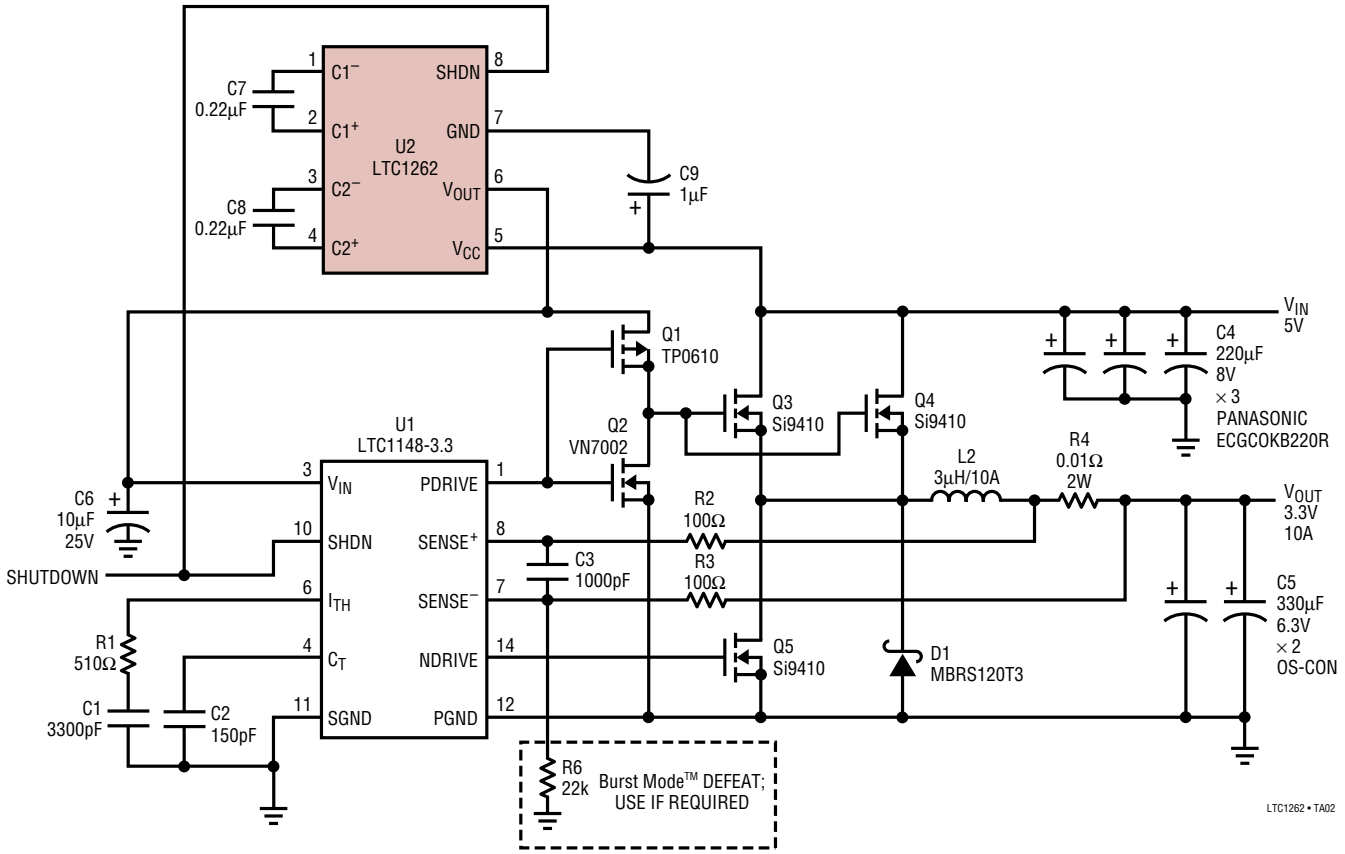

Burst Mode is a trademark of Linear Technology Corporation.

PACKAGE DESCRIPTION

Dimensions in inches (millimeters) unless otherwise noted.

N8 Package
8-Lead PDIP (Narrow 0.300)
(LTC DWG # 05-08-1510)

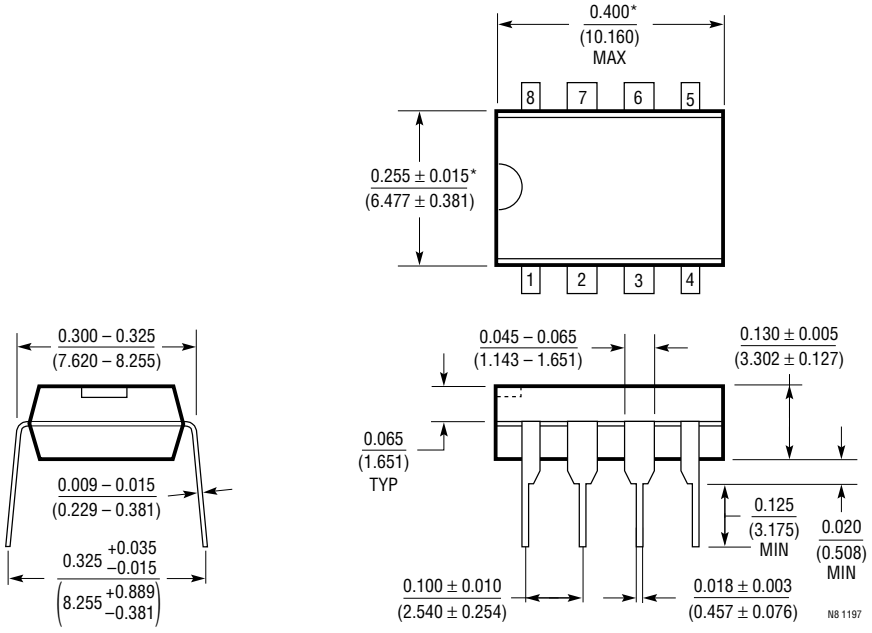

*THESE DIMENSIONS DO NOT INCLUDE MOLD FLASH OR PROTRUSIONS.
MOLD FLASH OR PROTRUSIONS SHALL NOT EXCEED 0.010 INCH (0.254mm)

S8 Package
8-Lead Plastic Small Outline (Narrow 0.150)
(LTC DWG # 05-08-1610)

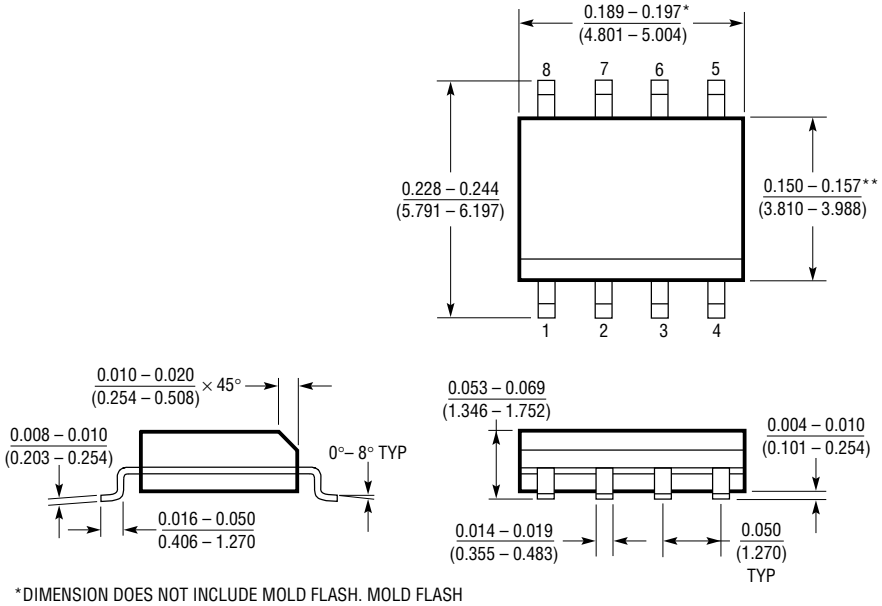

*DIMENSION DOES NOT INCLUDE MOLD FLASH. MOLD FLASH SHALL NOT EXCEED 0.006" (0.152mm) PER SIDE

**DIMENSION DOES NOT INCLUDE INTERLEAD FLASH. INTERLEAD FLASH SHALL NOT EXCEED 0.010" (0.254mm) PER SIDE

Information furnished by Linear Technology Corporation is believed to be accurate and reliable. However, no responsibility is assumed for its use. Linear Technology Corporation makes no representation that the interconnection of its circuits as described herein will not infringe on existing patent rights.

TYPICAL APPLICATION

Paralleling Devices

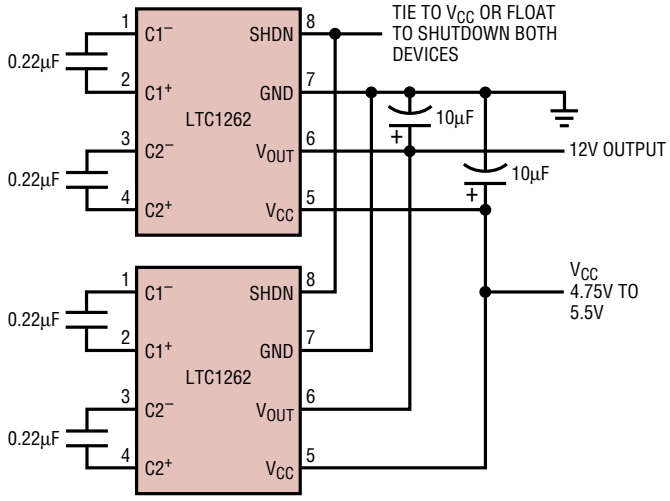

NOTE: KEEP DEVICES CLOSE TOGETHER OR USE SEPARATE 4.7µF TANTALUM CAPACITORS IF THIS IS NOT POSSBILE.

LTC1262 • TA03

Output Voltage vs Output Current for Two Paralleled Devices

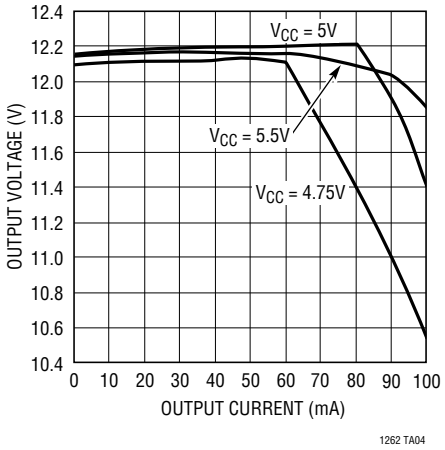

SEE FIGURE AT LEFT.

RELATED PARTS

PART NUMBER	DESCRIPTION	COMMENTS
LT1106*	Micropower Step-Up DC/DC Converter for PCMCIA Card Flash Memory	PCMCIA Card Power Control, 9µA I_{SHDN}, Small SMT Components, Requires External Inductor
LT1109-12	Micropower Low Cost DC/DC Converter Adjustable and Fixed 12V	Three-Lead Z Package, Requires External Inductor
LT1109A-12	Micropower DC/DC Converter Flash Memory VPP Generator Adjustable and Fixed 12V	Requires External Inductor
LT1301	Micropower High Efficiency 5V/12V Step-Up DC/DC Converter for Flash Memory	7µA I_{SHDN}, SMT Inductor and Capacitors
LT1309	500kHz Micropower DC/DC Converter for Flash Memory	Small SMT Inductor and Capacitors, 6µA I_{SHDN}

* See also LT1312/LT1313 PCMCIA VPP drivers/regulators, LT1314/LT1315 PCMCIA switch matrix and the LTC1470/LTC1471/LTC1472 Protected V_{CC} and VPP switching matrices

Linear Technology Corporation
1630 McCarthy Blvd., Milpitas, CA 95035-7417• (408)432-1900
FAX: (408) 434-0507•TELEX: 499-3977 • www.linear-tech.com

LT/TP 0298 REV A 2K • PRINTED IN USA

© LINEAR TECHNOLOGY CORPORATION 1994