Microprocessor Supervisory Circuits

FEATURES

- *Guaranteed* Reset Assertion at V_{CC} = 1V
- 8-Pin SO Plastic Package
- 2.0mA Maximum Supply Current
- 4.62V/4.37V Precision Voltage Monitor
- Power OK/Reset Time Delay: 600ms
- Minimum External Component Count
- Superior Upgrade for DS1232

APPLICATIONS

- Critical µP Power Monitoring
- Intelligent Instruments
- Computers and Controllers
- Automotive Systems

DESCRIPTION

The LTC®1232 provides power supply monitoring, watchdog timing and external reset for microprocessor systems. A precise internal voltage reference and comparator circuit monitor the power supply line. When an out-of-tolerance condition occurs, the reset outputs are forced to active states. The $\overline{RST}$ output is guaranteed to remain logic low even with V_{CC} as low as 1V.

The LTC1232 has an internal watchdog timer which forces the reset outputs to active states when the $\overline{Strobe}$ input is not forced low prior to a preset time-out period. The watchdog timing can be set to operate on time-out periods of typically 150ms, 600ms or 1.2 seconds.

The LTC1232 performs push-button reset control. The LTC1232 debounces the push-button input and guarantees an active reset pulse width of 250ms minimum.

, LTC and LT are registered trademarks of Linear Technology Corporation.

TYPICAL APPLICATION

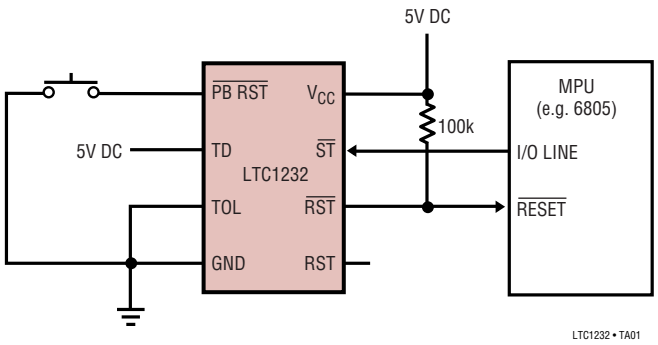

$\overline{RST}$ Output Voltage vs Supply Voltage

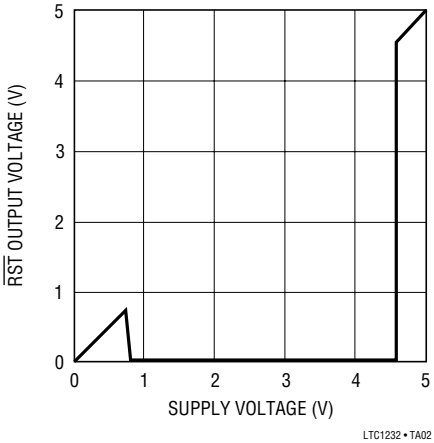

ABSOLUTE MAXIMUM RATINGS

(Note 1, 2 and 3)

Terminal Voltage

V_{CC} ..... –0.3V to 7.0V

$\overline{ST}$ and $\overline{RST}$ ..... –0.3V to 7.0V

All Other Inputs and Outputs ..... –0.3V to V_{CC} +0.3V

Power Dissipation 500mW

Operating Temperature Range

LTC1232C ..... 0°C to 70°C

LTC1232I ..... –40°C to 85°C

Storage Temperature Range ..... –65°C to 150°C

Lead Temperature (Soldering, 10 sec) ..... 300°C

PACKAGE/ORDER INFORMATION

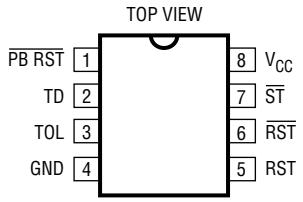

N8 PACKAGE
8-LEAD PDIP

T_{JMAX} = 100°C, θ_{JA} = 130°C/W

ORDER PART NUMBER
LTC1232CN8

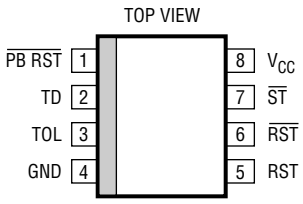

S8 PACKAGE
8-LEAD PLASTIC SO

T_{JMAX} = 100°C, θ_{JA} = 180°C/W

ORDER PART NUMBER
LTC1232CS8 LTC1232IS8
S8 PART MARKING
1232 1232I

Consult LTC Marketing for parts specified with wider operating temperature ranges.

PRODUCT SELECTION GUIDE

	PINS	RESET	WATCHDOG TIMER	BATTERY BACKUP	POWER FAIL WARNING	RAM WRITE PROTECT	PUSH-BUTTON RESET	CONDITIONAL BATTERY BACKUP
LTC1232	**8**	**X**	**X**				**X**	
LTC690	8	X	X	X	X			
LTC691	16	X	X	X	X	X		
LTC694	8	X	X	X	X			
LTC695	16	X	X	X	X	X		
LTC699	8	X	X					
LTC1235	16	X	X	X	X	X	X	X

RECOMMENDED OPERATING CONDITIONS

The ● denotes the specifications which apply over the full operating temperature. V_{CC} = full operating range.

SYMBOL	PARAMETER	CONDITIONS		MIN	TYP	MAX	UNITS
V_{CC}	Supply Voltage		●	4.5	5	5.5	V
V_{IH}	$\overline{ST}$ and $\overline{PB\ RST}$ Input High Level		●	2		V_{CC}+0.3	V
V_{IL}	$\overline{ST}$ and $\overline{PB\ RST}$ Input Low Level		●	–0.3		0.8	V

DC ELECTRICAL CHARACTERISTICS

The ● denotes the specifications which apply over the full operating temperature. V_{CC} = full operating range.

SYMBOL	PARAMETER	CONDITIONS		MIN	TYP	MAX	UNITS
I_{IL}	Input Leakage	(Note 3)	●	–1		1	µA
I_{OH}	Output Current at 2.4V	(Note 5)	●	–1	–13		mA
I_{OL}	Output Current at 0.4V	(Note 5)	●	2	6		mA
I_{CC}	Supply Current	(Note 4)	●		0.5	2	mA
V_{CCTP}	V_{CC} Trip Point	TOL = GND	●	4.5	4.62	4.74	V
V_{CCTP}	V_{CC} Trip Point	TOL = V_{CC}	●	4.25	4.37	4.49	V
V_{HYS}	V_{CC} Trip Point Hysteresis				40		mV
$V_{\overline{RST}}$	$\overline{RST}$ Output Voltage at V_{CC} = 1V	I_{SINK} = 10µA			4	200	mV

AC CHARACTERISTICS

The ● denotes the specifications which apply over the full operating temperature. V_{CC} = full operating range.

SYMBOL	PARAMETER	CONDITIONS		MIN	TYP	MAX	UNITS
t_{PB}	$\overline{PB\ RST}$ = V_{IL}		●	40			ms
t_{RST}	RESET Active Time		●	250	610	1000	ms
t_{ST}	$\overline{ST}$ Pulse Width		●	20			ns
t_{RPD}	V_{CC} Detect to RST and $\overline{RST}$		●			100	ns
t_f	V_{CC} Slew Rate 4.75V–4.25V		●	300			µs
t_{RPU}	V_{CC} Detect to RST and $\overline{RST}$ (Reset Active Time)	t_R = 5µs	●	250	610	1000	ms
t_R	V_{CC} Slew Rate 4.25V–4.75V		●	0			ns
t_{TD}	$\overline{ST}$ Pin Detect to RST and $\overline{RST}$ (Watchdog Time-Out Period)	TD = GND TD = Floating TD = V_{CC}	● ● ●	60 250 500	150 610 1200	250 1000 2000	ms ms ms
C_{IN}	Input Capacitance				5		pF
C_{OUT}	Output Capacitance				5		pF

Note 1: Absolute Maximum Ratings are those values beyond which the life of a device may be impaired.

Note 2: All voltage values are with respect to GND.

Note 3: The $\overline{PB\ RST}$ pin is internally pulled up to V_{CC} with an internal impedance of 10k typical. The TD pin has internal bias current.

Note 4: Measured with outputs open.

Note 5: The $\overline{RST}$ pin is an open drain output.

TIMING DIAGRAMS

Push-Button Reset

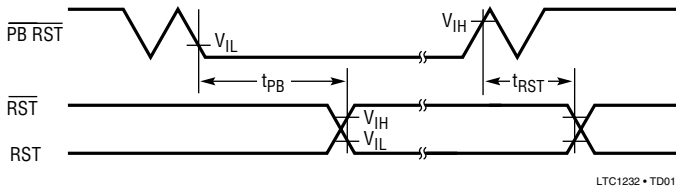

Power Down

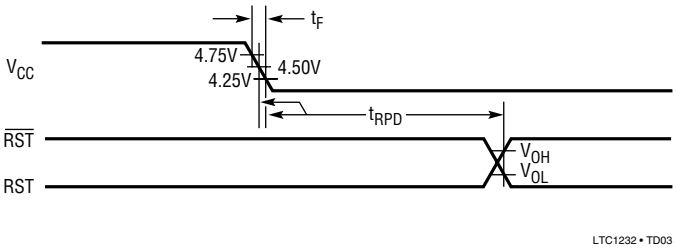

Strobe Input

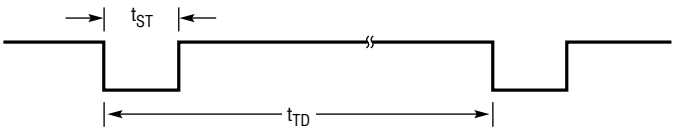

Power Up

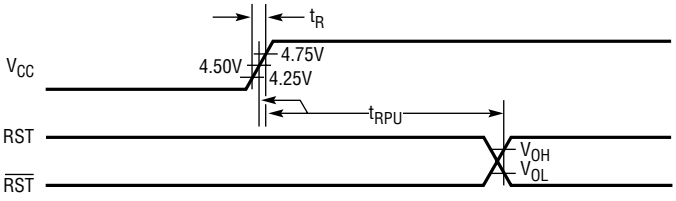

BLOCK DIAGRAM

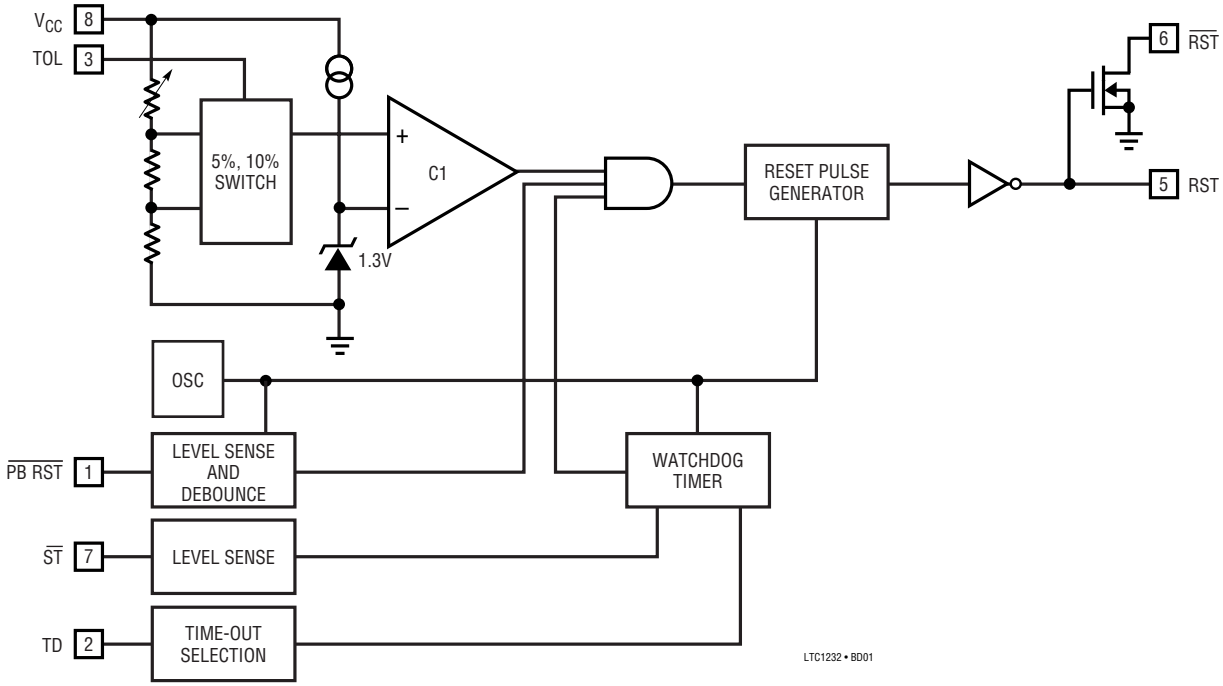

TYPICAL PERFORMANCE CHARACTERISTICS

V_{CC} Trip Point vs Temperature

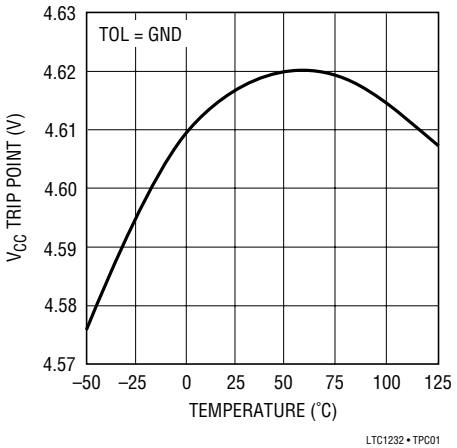

V_{CC} Trip Point vs Temperature

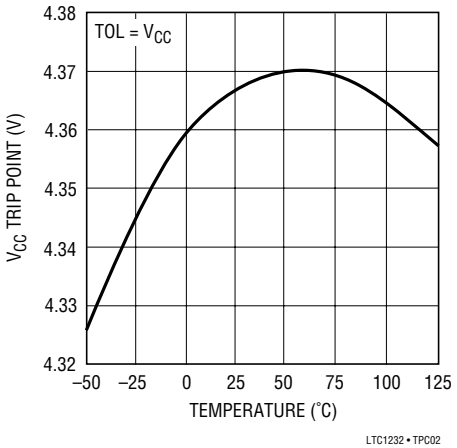

Reset Active Time vs Temperature

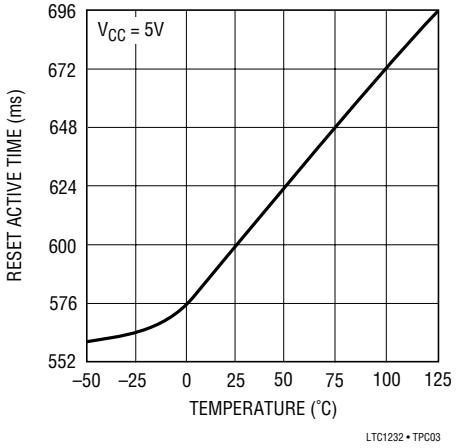

Time-Out Period vs Temperature

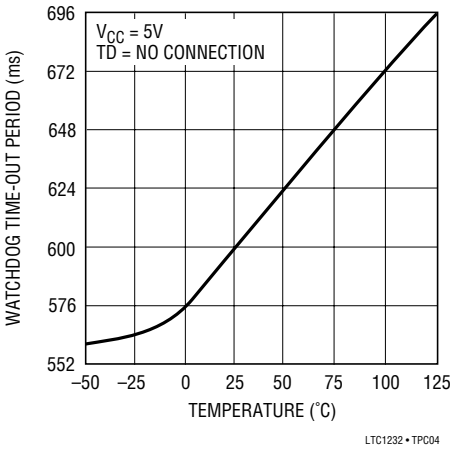

RST Output Voltage vs Supply Voltage

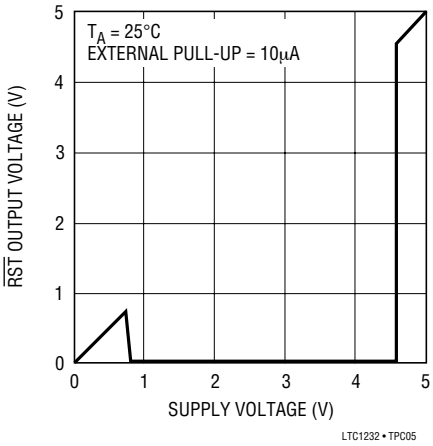

PIN FUNCTIONS

V_{CC}: 5V Supply Input. The V_{CC} pin should be bypassed with a 0.1µF capacitor.

GND: Ground Pin.

$\overline{\text{PB RST}}$: Logic Input to be Directly Connected to a Push-Button. The $\overline{\text{PB RST}}$ input requires an active low signal which is debounced and timed for a minimum of 40ms. When this condition is satisfied, the reset pulse generator forces the reset outputs to active states. The reset outputs remain in active states for a minimum of 250ms after $\overline{\text{PB RST}}$ is released from logic low level.

TOL: Input to Select 5% or 10% Variation on V_{CC}. When TOL is connected to GND, the reset pulse generator forces the reset outputs to active states as V_{CC} falls below 4.75V (4.62V typical). When TOL is connected to V_{CC}, the reset pulse generator forces the reset outputs to active states as V_{CC} falls below 4.5V (4.37V typical).

TD: Time-Out Delay. TD is a three-level input to select three different time-out periods. The time-out period is set by the TD input to be 150ms with TD connected to GND, 600ms with TD left floating, and 1.2 seconds with TD connected to V_{CC}.

PIN FUNCTIONS

$\overline{RST}$: Open Drain Logic Output for μP Reset Control. The LTC1232 provides three ways to generate μP reset. First, when V_{CC} falls below V_{CC} trip point (4.75V with TOL = GND and 4.5V with TOL = V_{CC}), $\overline{RST}$ goes active low. After V_{CC} returns to 5V, the reset pulse generator forces $\overline{RST}$ to remain active low for a minimum of 250ms. Second, when the watchdog timer is not serviced prior to a selected time-out period, the reset pulse generator also forces $\overline{RST}$ to active low for a minimum of 250ms and repeats for every time-out period. Third and the last, when the $\overline{PB\ RST}$ pin stays active low for a minimum of 40ms, $\overline{RST}$ becomes active low. The $\overline{RST}$ output will remain active low for a minimum of 250ms from the moment the push-button reset input is released from logic low level.

RST: RST is an Active High Logic Output. It is the inverse of $\overline{RST}$.

$\overline{ST}$: Logic Input to Reset the Watchdog Timer. Driving $\overline{ST}$ either high or low longer than the time-out period set by the TD input, forces the reset outputs to active states for a minimum of 250ms. The timer resets itself and begins to time-out again with each high to low transition on the $\overline{ST}$ input (see Figure 2).

APPLICATIONS INFORMATION

Power Monitoring

The LTC1232 uses a bandgap voltage reference and a precision voltage comparator, C1, to monitor the 5V supply input on V_{CC} (see Block Diagram). When V_{CC} falls below the V_{CC} trip point (4.62V typical with TOL = GND and 4.37V typical with TOL V_{CC}), the reset outputs are forced to active states. The V_{CC} trip point accounts for a 5% or 10% variation on V_{CC}, so the reset outputs become active when V_{CC} falls below the V_{CC} trip point. On power-up, the reset signals are held in active states for a minimum of 250ms after the V_{CC} trip point is reached to allow the power supply and microprocessor to stabilize. On power-down, the $\overline{RST}$ signal remains active low even with V_{CC} as low as 1V. This capability helps hold the microprocessor in stable shutdown condition. Figure 1 shows the timing diagram of the $\overline{RST}$ signal.

The precision voltage comparator, C1, typically has 40mV of hysteresis which ensures that glitches at V_{CC} pin do not activate the reset outputs. Response time is typically 10μs. To help prevent mitriggering due to transient loads, V_{CC} pin should be bypassed with a 0.1μF capacitor with the leads trimmed as short as possible.

Push-Button Reset

The LTC1232 provides a logic input pin, $\overline{PB\ RST}$, for direct connection to a push-button. This push-button reset input requires an active low signal. Internally, this input signal is debounced and timed for a minimum of 40ms. When this

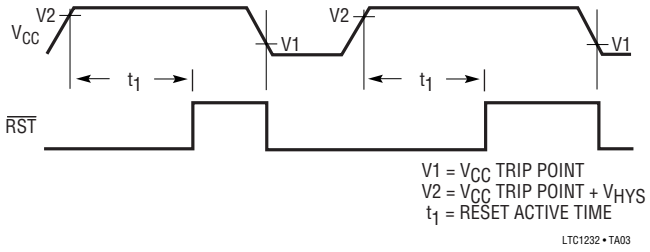

Figure 1. Reset Active Time

APPLICATIONS INFORMATION

condition is satisfied, the reset pulse generator forces the reset outputs to active states. The reset signals will remain active for a minimum of 250ms from the moment the push-button reset input is released from logic low level (see Timing Diagram).

Watchdog Timer

The LTC1232 provides a watchdog timer function to monitor the activity of the microprocessor. If the microprocessor does not stimulate the strobe input, $\overline{ST}$, within a selected time-out period, the reset outputs are forced to active states for a minimum of 250ms. The time-out period is selected by the Time-Out Delay input, TD, to be 150ms with TD connected to GND, 600ms with TD left floating, and 1.2 seconds with TD connected to V_{CC}. The 1.2 second time-out period is adequate for many systems to serve the watchdog timer immediately after a reset. Figure 2 shows the timing diagram of watchdog time-out period and reset active time. The watchdog time-out period is restarted as soon as the reset outputs are inactive. When a high-to-low transition occurs at the $\overline{ST}$ pin prior to time-out, the watchdog time is reset and begins to time-out again. To ensure the watchdog time does not time-out, a high-to low transition on the $\overline{ST}$ pin must occur at or less than the minimum time-out period. If the input to the $\overline{ST}$ pin remains either high or low, reset pulses will be issued for every time-out period selected by the TD pin. The watchdog timer is disabled when V_{CC} falls below the V_{CC} trip point.

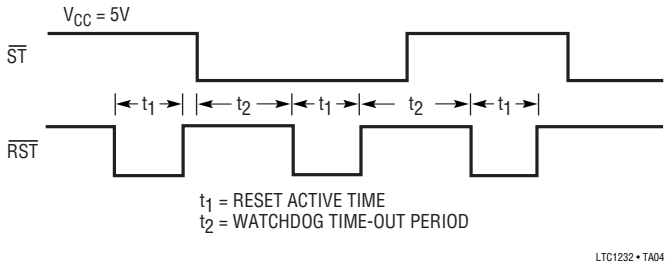

Figure 2. Watchdog Time-Out Period and Reset Active Time

PACKAGE DESCRIPTION

N8 Package
8-Lead PDIP (Narrow .300 Inch)
(Reference LTC DWG # 05-08-1510)

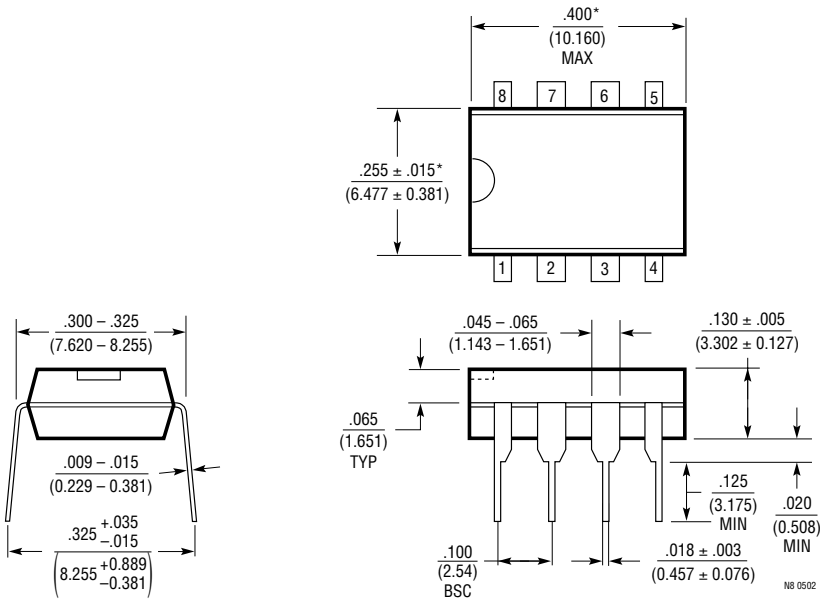

NOTE:
1. DIMENSIONS ARE $\frac{\text{INCHES}}{\text{MILLIMETERS}}$

*THESE DIMENSIONS DO NOT INCLUDE MOLD FLASH OR PROTRUSIONS.
MOLD FLASH OR PROTRUSIONS SHALL NOT EXCEED .010 INCH (0.254mm)

Information furnished by Linear Technology Corporation is believed to be accurate and reliable. However, no responsibility is assumed for its use. Linear Technology Corporation makes no representation that the interconnection of its circuits as described herein will not infringe on existing patent rights.

PACKAGE DESCRIPTION

S8 Package
8-Lead Plastic Small Outline (Narrow .150 Inch)
(Reference LTC DWG # 05-08-1610)

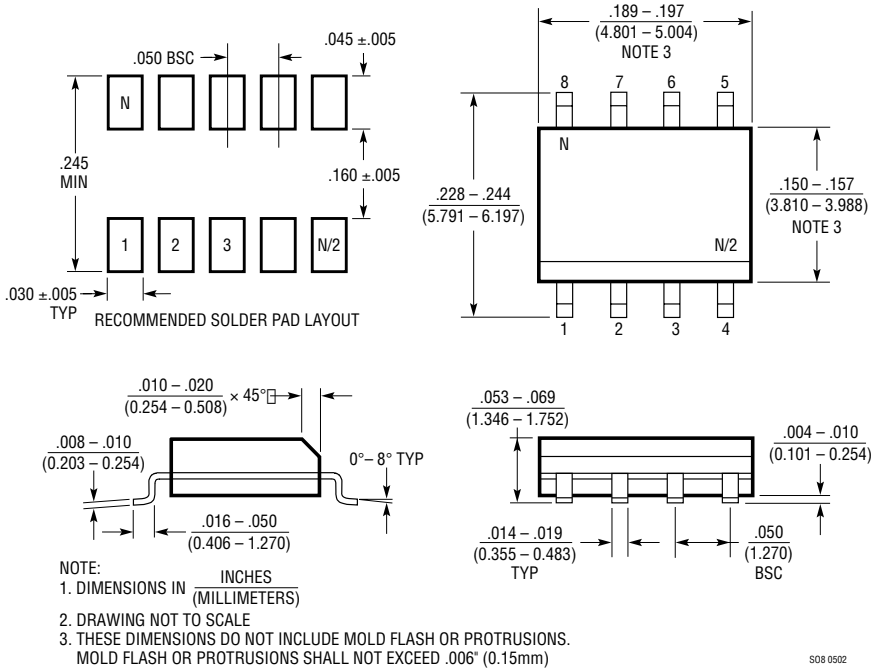

RELATED PARTS

PART NUMBER	DESCRIPTION	COMMENTS
LTC690	5V Supply Monitor, Watchdog Timer and Battery Backup	4.65V Threshold
LTC694-3.3	3.3V Supply Monitor, Watchdog Timer and Battery Backup	2.9V Threshold
LTC699	5V Supply Monitor and Watchdog Timer	4.65V Threshold
LTC1326	Micropower Precision Triple Supply Monitor for 5V, 3.3V and ADJ	4.725V, 3.118V, 1V Thresholds (±0.75%)
LTC1326-2.5	Micropower Precision Triple Supply Monitor for 2.5V, 3.3V and ADJ	2.363V, 3.118V, 1V Thresholds (±0.75%)
LTC1536	Precision Triple Supply Monitor for PCI Applications	Meets PCI t_{FAIL} Timing Specifications
LTC1726-2.5	Micropower Triple Supply Monitor for 2.5V, 3.3V and ADJ	Adjustable $\overline{\text{RESET}}$ and Watchdog Time-Outs
LTC1726-5	Micropower Triple Supply Monitor for 5V, 3.3V and ADJ	Adjustable $\overline{\text{RESET}}$ and Watchdog Time-Outs
LTC1727-2.5/LTC1727-5	Micropower Triple Supply Monitor with Open-Drain Reset	Individual Monitor Outputs in MSOP
LTC1728-1.8/TC1728-3.3	Micropower Triple Supply Monitor with Open-Drain Reset	5-Lead SOT-23 Package
LTC1728-2.5/LTC1728-5	Micropower Triple Supply Monitor with Open-Drain Reset	5-Lead SOT-23 Package
LTC1985-1.8	Micropower Triple Supply Monitor with Push-Pull Reset Output	5-Lead SOT-23 Package

Linear Technology Corporation
1630 McCarthy Blvd., Milpitas, CA 95035-7417
(408) 432-1900 • FAX: (408) 434-0507 • www.linear.com

LW/TP 1002 1K REV A • PRINTED IN USA

© LINEAR TECHNOLOGY CORPORATION 1992