Low Noise, 8th Order, Clock Sweepable Elliptic Lowpass Filter

FEATURES

- 8th Order Filter in a 14-Pin Package
- No External Components
- 100:1 Clock to Center Ratio
- 150μV_{RMS} Total Wideband Noise
- 0.03% THD or Better
- 50kHz Maximum Corner Frequency
- Operates from ±2.37V to ±8V Power Supplies
- Passband Ripple Guaranteed Over Full Military Temperature Range

APPLICATIONS

- Antialiasing Filters
- Telecom PCM Filters

DESCRIPTION

The LTC®1064-1 is an 8th order, clock sweepable elliptic (Cauer) lowpass switched capacitor filter. The passband ripple is typically ±0.15dB, and the stopband attenuation at 1.5 times the cutoff frequency is 68dB or more.

An external TTL or CMOS clock programs the value of the filter's cutoff frequency. The clock to cutoff frequency ratio is 100:1.

No external components are needed for cutoff frequencies up to 20kHz. For cutoff frequencies over 20kHz two low value capacitors are required to maintain passband flatness. The LTC1064-1 features low wideband noise and low harmonic distortion even for input voltages up to 3V_{RMS}. In fact the LTC1064-1 overall performance completes with equivalent multiple op amp RC active realizations.

The LTC1064-1 is available in a 14-pin DIP or 16-pin surface mounted SW package.

The LTC1064-1 is pin compatible with the LTC1064-2.

LT, LTC and LT are registered trademarks of Linear Technology Corporation.

TYPICAL APPLICATION

8th Order Clock Sweepable Lowpass Elliptic Antialiasing Filter

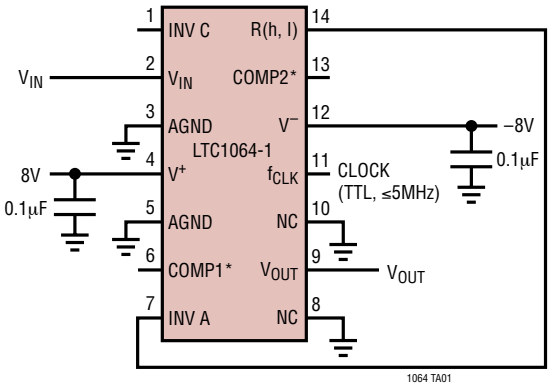

NOTE: THE POWER SUPPLIES SHOULD BE BYPASSED BY A 0.1μF CAPACITOR CLOSE TO THE PACKAGE.

FOR SERVO OFFSET NULLING APPLICATIONS, PIN 1 IS THE 2ND STAGE SUMMING JUNCTION.
*FOR CUTOFF FREQUENCY ABOVE 20kHz, USE COMPENSATION CAPACITORS (5pF TO 56pF) BETWEEN PIN 13 AND PIN 1 AND PIN 6 AND PIN 7.

Frequency Response

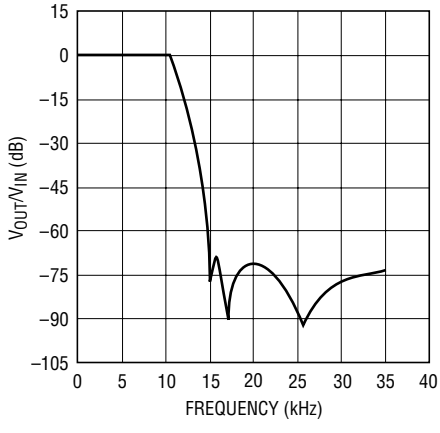

8th ORDER CLOCK SWEEPABLE LOWPASS ELLIPTIC ANTIALIASING FILTER MAINTAINS, FOR 0.1Hz ≤ f_{CUTOFF} ≤ 10kHz, A ±0.15dB PASSBAND RIPPLE AND 72dB STOPBAND ATTENUATION AT 1.5 × f_{CUTOFF}. TOTAL WIDEBAND NOISE = 150μV_{RMS}, THD = 0.03% FOR V_{IN} = 1V_{RMS}

ABSOLUTE MAXIMUM RATINGS (Note 1)

Total Supply Voltage (V^+ to V^-) 16.5V
Power Dissipation 400mW
Storage Temperature Range ..... –65°C to 150°C
Lead Temperature (Soldering, 10 sec) ..... 300°C

Operating Temperature Range
LTC1064-1M **(OBSOLETE)** ..... –55°C to 125°C
LTC1064-1C/AC ..... –40°C to 85°C

PACKAGE/ORDER INFORMATION

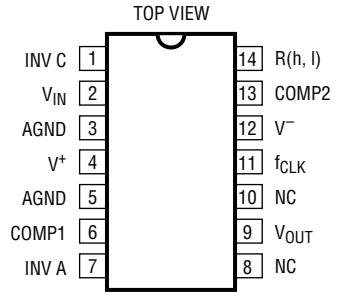

N PACKAGE
14-LEAD PDIP
T_{JMAX} = 110°C, θ_{JA} = 70°C/W

J PACKAGE
14-LEAD CERDIP

OBSOLETE PACKAGE
Consider the N14 Package for Alternate Source

ORDER PART NUMBER

LTC1064-1CN
LTC1064-1ACN

LTC1064-1MJ
LTC1064-1CJ

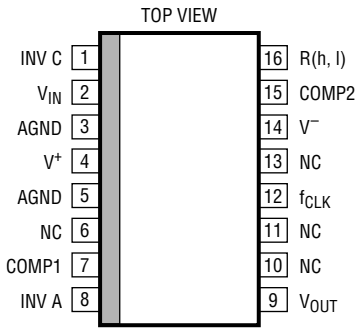

SW PACKAGE
16-LEAD PLASTIC (WIDE) SO
T_{JMAX} = 150°C, θ_{JA} = 90°C/W

ORDER PART NUMBER

LTC1064-1CSW

Consult LTC Marketing for parts specified with wider operating temperature ranges.

ELECTRICAL CHARACTERISTICS

The ● denotes the specifications which apply over the full operating temperature range, otherwise specifications are at T_A = 25°C. V_S = ±7.5V, f_{CLK} = 1MHz, R1 = 10k, C1 = 10pF, TTL or CMOS clock input level unless otherwise specified.

PARAMETER	CONDITIONS		MIN	TYP	MAX	UNITS
Passband Gain, LTC1064-1, 1A	Referenced to 0dB, 1Hz to 0.1f_C	●		±0.1	±0.35	dB
Gain TempCo				0.0002		dB/°C
Passband Edge Frequency, f_C				10 ± 1%		kHz
Gain at f_C	Referenced to Passband Gain					
LTC1064-1		●	–1.25		0.85	dB
LTC1064-1A		●	–0.75		0.65	dB
–3dB Frequency				10.7		kHz
Passband Ripple (Note 1)	0.1f_C to 0.85f_C Referenced to Passband Gain,					
LTC1064-1	Measured at 6.25kHz and 8.5kHz	●		±0.15	±0.32	dB
LTC1064-1A		●		±0.1	±0.19	dB
Ripple TempCo				0.0004		dB/°C
Stopband Attenuation	At 1.5f_C Referenced to 0dB					
LTC1064-1		●	66	72		dB
LTC1064-1A		●	68	72		dB
Stopband Attenuation	At 2f_C Referenced to 0dB					
LTC1064-1		●	67	72		dB
LTC1064-1A		●	68	72		dB

ELECTRICAL CHARACTERISTICS

The ● denotes the specifications which apply over the full operating temperature range, otherwise specifications are at T_A = 25°C. V_S = ±7.5V, f_{CLK} = 1MHz, R1 = 10k, C1 = 10pF, TTL or CMOS clock input level unless otherwise specified.

PARAMETER	CONDITIONS		MIN	TYP	MAX	UNITS
Input Frequency Range			0		$f_{CLK}/2$	kHz
Output Voltage Swing and Operating Input Voltage Range	V_S = ±2.37V V_S = ±5V V_S = ±7.5V	● ● ●	±1 ±3 ±5			V V V
Total Harmonic Distortion	V_S = ±5V, Input = $1V_{RMS}$ at 1kHz V_S = ±7.5V, Input = $3V_{RMS}$ at 1kHz			0.015 0.03		% %
Wideband Noise	V_S = ±5V, Input = GND 1Hz to 999kHz V_S = ±7.5V, Input = GND 1Hz to 999kHz			150 165		μV_{RMS} μV_{RMS}
Output DC Offset LTC1064-1 LTC1064-1A Output DC Offset TempCo	V_S = ±7.5V, Pin 2 Grounded V_S = ±5V			 50 50 –100	 175 125 	 mV mV µV/°C
Input Impedance			10	20		kΩ
Output Impedance	f_{OUT} = 10kHz			2		Ω
Output Short-Circuit Current	Source/Sink			3/1		mA
Clock Feedthrough				200		μV_{RMS}
Maximum Clock Frequency	50% Duty Cycle, V_S = ±7.5V				5	MHz
Power Supply Current	V_S = ±2.37V	●		10	22	mA
	V_S = ±5V	 ●		12	23 26	mA mA
	V_S = ±7.5V, f_{CLK} = 1MHz	 ●		16	28 32	mA mA
Power Supply Voltage Range		●	±2.37		±8	V

Note 1: Absolute Maximum Ratings are those values beyond which the life of a device may be impaired.

Note 2: For tighter specifications please contact LTC Marketing.

TYPICAL PERFORMANCE CHARACTERISTICS

Gain vs Frequency

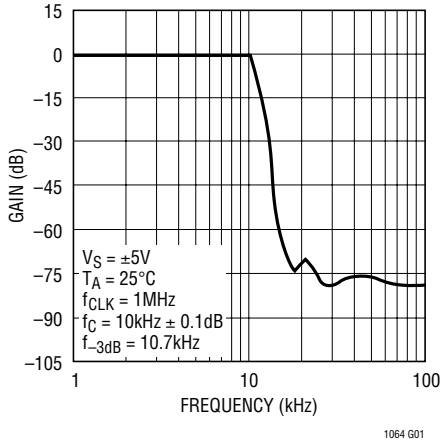

Phase vs Frequency

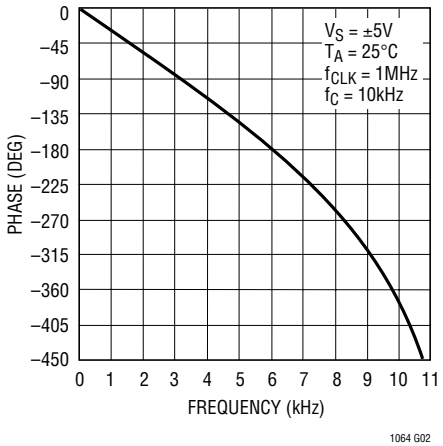

Group Delay

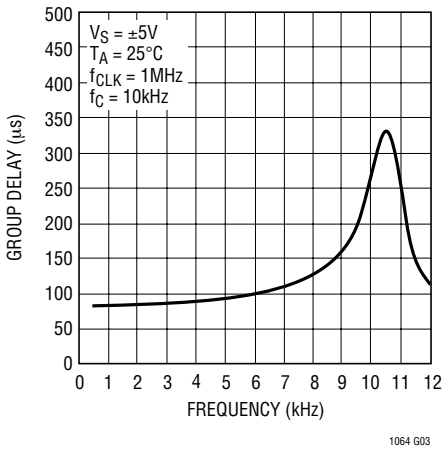

TYPICAL PERFORMANCE CHARACTERISTICS

Gain vs Frequency

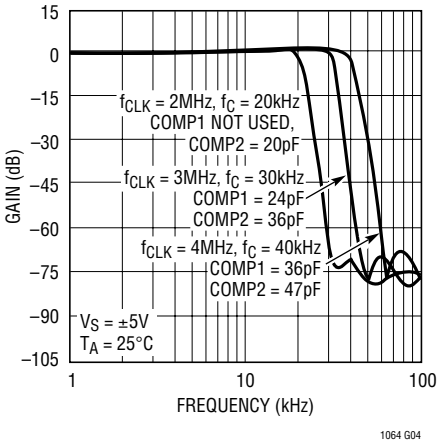

Gain vs Frequency

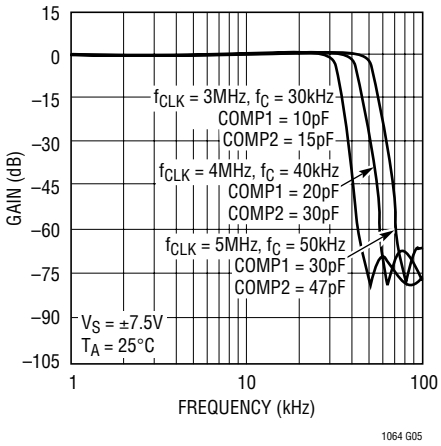

Gain vs Frequency

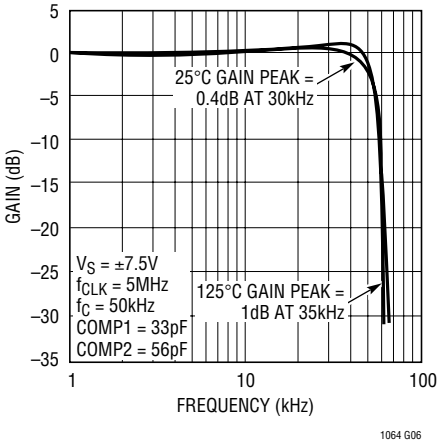

Typical Wideband Noise (151μV_{RMS}) V_S = ±5V, T_A = 25°C f_{CLK} = 1MHz, f_C = 10kHz Input Grounded

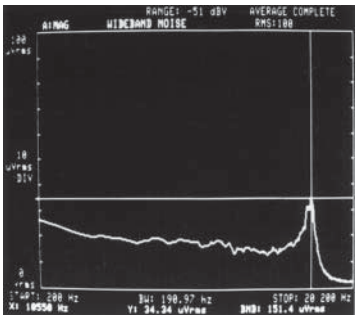

Total Harmonic Distortion (0.025%) V_S = ±7.5V, T_A = 25°C f_{CLK} = 1MHz, f_C = 10kHz Input = 1kHz at 3V_{RMS}

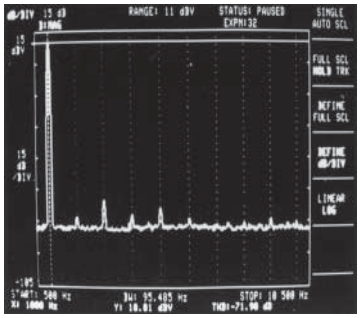

Power Supply Current vs Power Supply Voltage

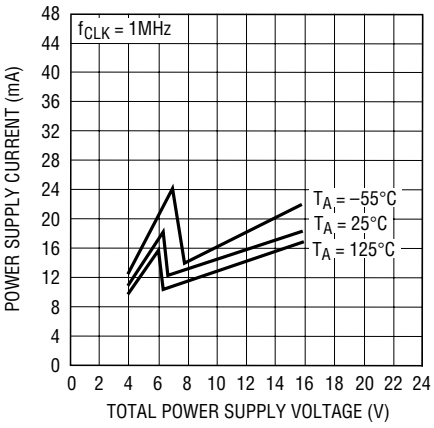

PIN FUNCTIONS (Pin Numbers Refer to the 14-Pin Package)

COMP1, INV A, COMP2, INV C (Pins 1,6,7, and 13): For filter cutoff frequencies higher than 20kHz, in order to minimize the passband ripple, compensation capacitors should be added between Pin 6 and Pin 7 (COMP1) and Pin 1 and Pin 13 (COMP2). For COMP1 (COMP2), add 1pF (1.5pF) mica capacitor for each kHz increase in cutoff frequency above 20kHz. For more detail refer to Gain vs Frequency graphs.

V_{IN}, V_{OUT} (Pins 2, 9): The input Pin 2 is connected to an 18k resistor tied to the inverting input of an op amp. Pin 2 is protected against static discharge. The device's output, Pin 9, is the output of an op amp which can typically source/sink 3mA/1mA. Although the internal op amps are unity gain stable, driving long coax cables is not recommended.

When testing the device for noise and distortion, the output, Pin 9, should be buffered (Figure 4). *The op amp power supply wire (or trace) should be connected directly to the power source.*

AGND (Pins 3, 5): For dual supply operation these pins should be connected to a ground plane. For single supply

PIN FUNCTIONS (Pin Numbers Refer to the 14-Pin Package)

operation both pins should be tied to one half supply (Figure 2). Also Pin 8 and Pin 10, although they are not internally connected should be tied to analog ground or system ground. This improves the clock feedthrough performance.

V^+, V^- (Pins 4, 12): The V^+ and V^- pins should be bypassed with a 0.1μF capacitor to an adequate analog ground. Low noise, nonswitching power supplies are recommended. *To avoid latchup when the power supplies exhibit high turn-on transients, a 1N5817 Schottky diode should be added from the V^+ and V^- pins to ground (Figure 1).*

INV A, R(h, I) (Pins 7, 14): A very short connection between Pin 14 and Pin 7 is recommended. This connection should be preferably done under the IC package. In a breadboard, use a one inch, or less, shielded coaxial cable; the shield should be grounded. In a PC board, use a one inch trace or less; surround the trace by a ground plane.

NC (Pins 8, 10): The "no connection" pins preferably should be grounded.

f_{CLK} (Pin 11): For ±5V supplies the logic threshold level is 1.4V. For ±8V and 0V to 5V supplies the logic threshold levels are 2.2V and 3V respectively. The logic threshold levels vary ±100mV over the full military temperature range. The recommended duty cycle of the input clock is 50% although for clock frequencies below 500kHz the clock "on" time can be as low as 200ns. The maximum clock frequency for ±5V supplies is 4MHz. For ±7V supplies and above, the maximum clock frequency is 5MHz. Do not allow the clock levels to exceed the power supplies. For clock level shifting (see Figure 3).

TYPICAL APPLICATIONS

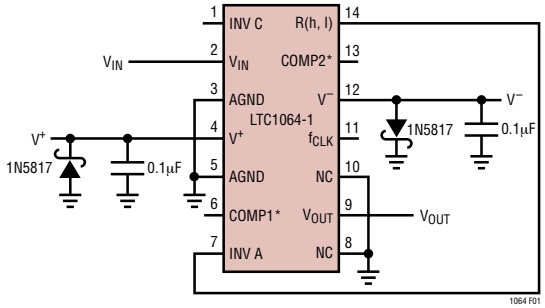

Figure 1. Using Schottky Diodes to Protect the IC from Power Supply Spikes

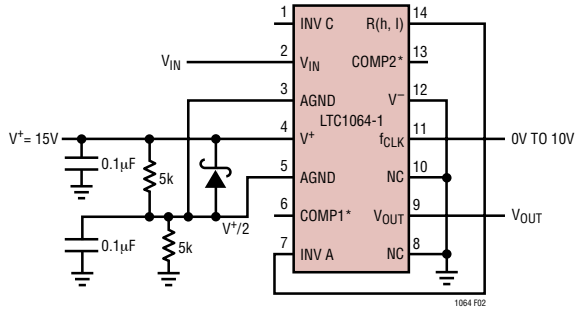

Figure 2. Single Supply Operation. If Fast Power Up or Down Transients are Expected, Use a 1N5817 Schottky Diode Between Pin 4 and Pin 5.

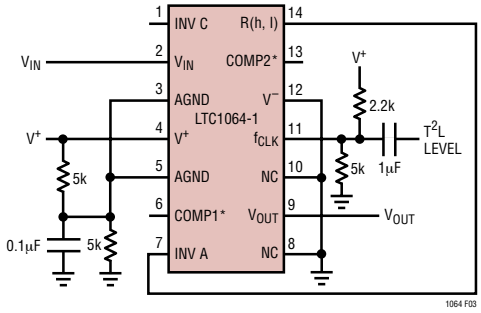

Figure 3. Level Shifting the Input T^2L Clock for Single Supply Operation, V+ >6V.

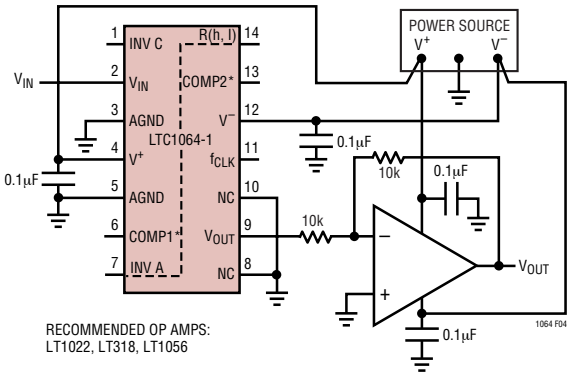

Figure 4. Buffering the Filter Output. The Buffer Op Amp Should Not Share the LTC1064-1 Power Lines.

TYPICAL APPLICATIONS

Transitional Elliptic-Bessel Dual 5th Order Lowpass Filter

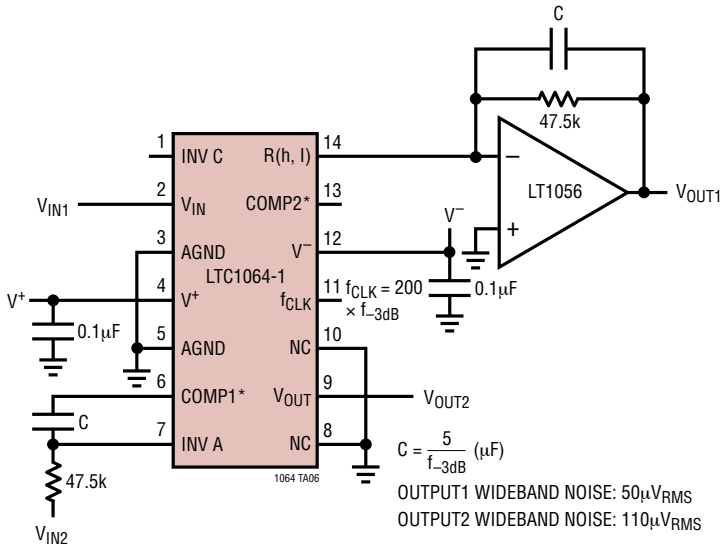

Amplitude Response

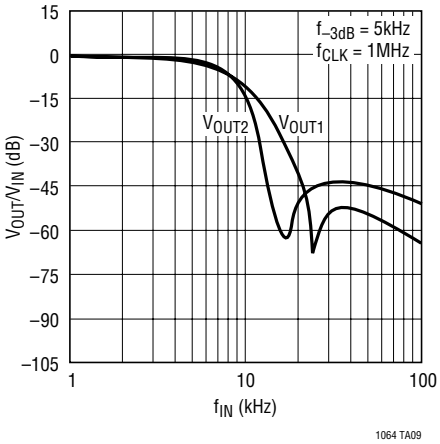

Transient Response to a 2V Step Input V_{OUT2}

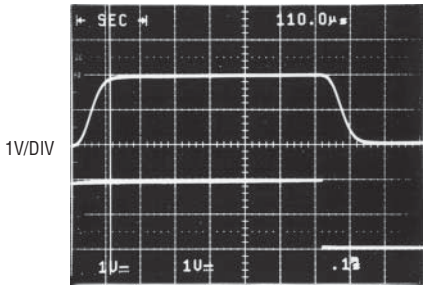

Transient Response to a 2V Step Input V_{OUT1}

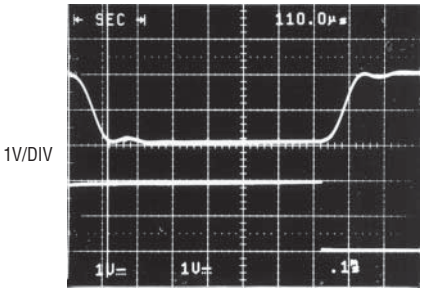

Adding an Output Buffer-Filter to Eliminate Any Clock Feedthrough Over a 10:1 Clock Range, for f_{CLK} = 2kHz to 20kHz

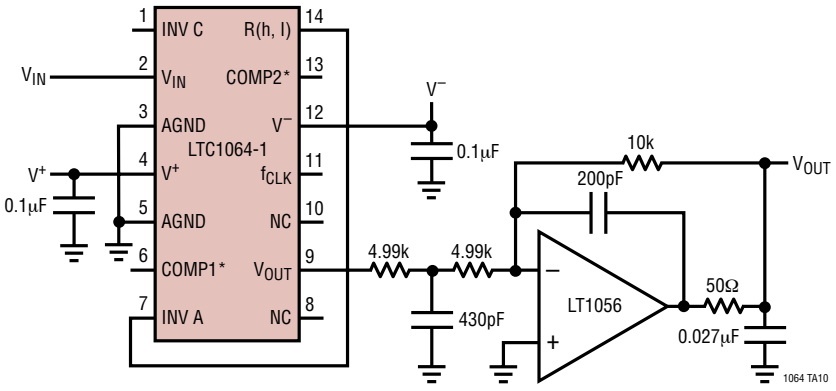

PACKAGE DESCRIPTION

J Package
14-Lead CERDIP (Narrow 0.300, Hermetic)
(LTC DWG # 05-08-1110)

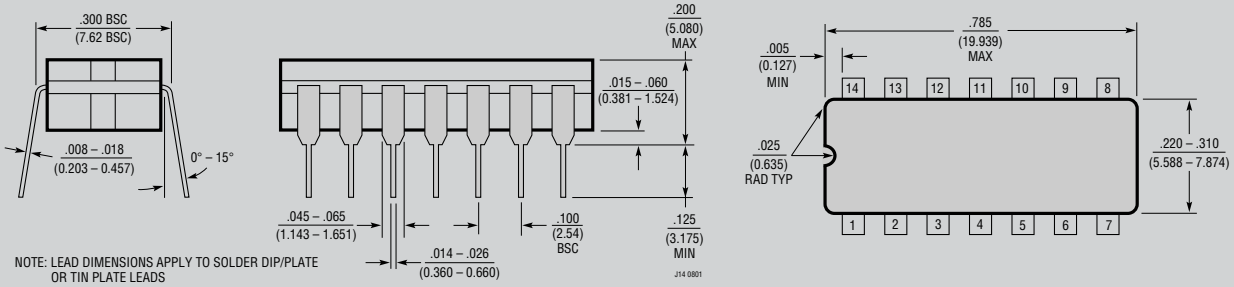

NOTE: LEAD DIMENSIONS APPLY TO SOLDER DIP/PLATE OR TIN PLATE LEADS

J14 0801

OBSOLETE PACKAGE

N Package
14-Lead PDIP (Narrow 0.300)
(LTC DWG # 05-08-1510)

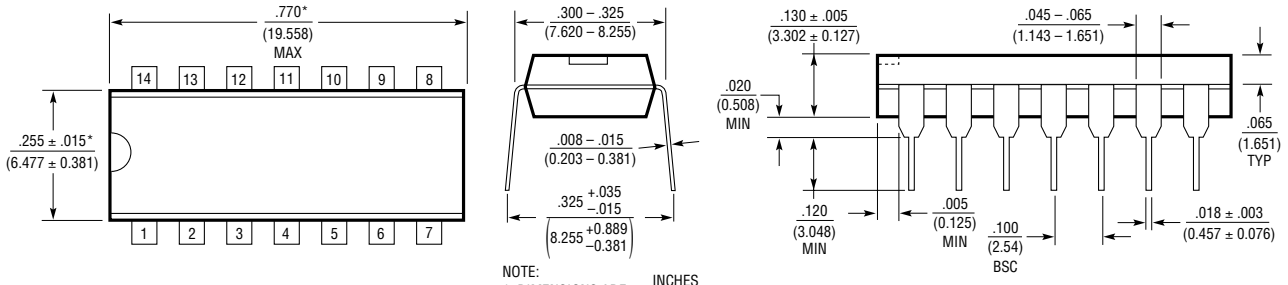

NOTE:
1. DIMENSIONS ARE INCHES / MILLIMETERS

*THESE DIMENSIONS DO NOT INCLUDE MOLD FLASH OR PROTRUSIONS.
MOLD FLASH OR PROTRUSIONS SHALL NOT EXCEED .010 INCH (0.254mm)

N14 1002

SW Package
16-Lead Plastic Small Outline (Wide .300 Inch)
(Reference LTC DWG # 05-08-1620)

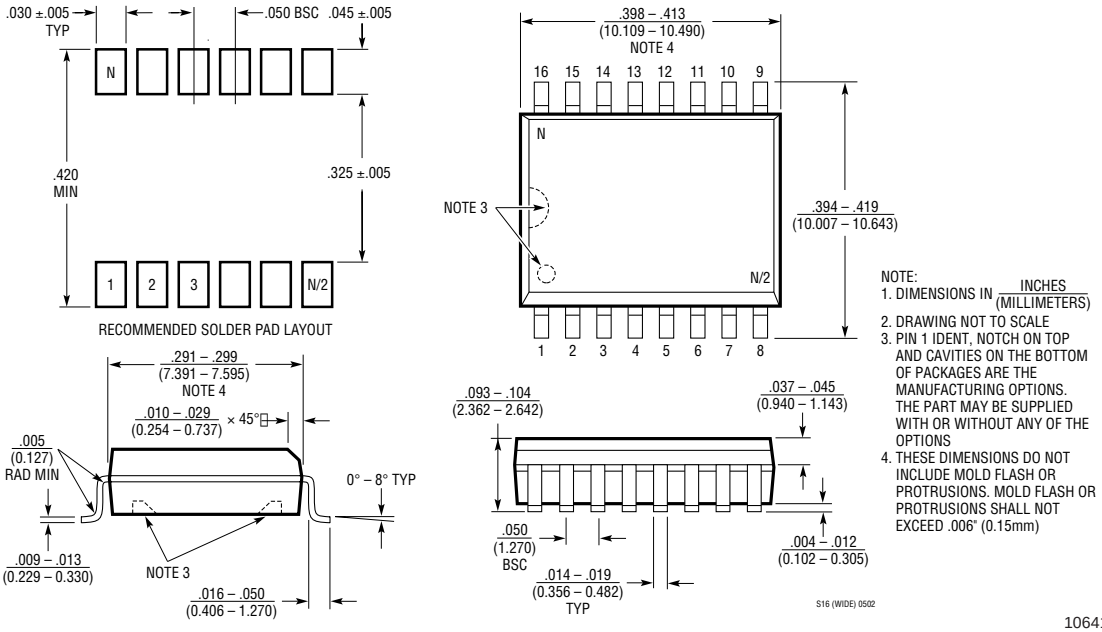

NOTE:
1. DIMENSIONS IN INCHES / (MILLIMETERS)
2. DRAWING NOT TO SCALE
3. PIN 1 IDENT, NOTCH ON TOP AND CAVITIES ON THE BOTTOM OF PACKAGES ARE THE MANUFACTURING OPTIONS. THE PART MAY BE SUPPLIED WITH OR WITHOUT ANY OF THE OPTIONS
4. THESE DIMENSIONS DO NOT INCLUDE MOLD FLASH OR PROTRUSIONS. MOLD FLASH OR PROTRUSIONS SHALL NOT EXCEED .006" (0.15mm)

S16 (WIDE) 0502

Information furnished by Linear Technology Corporation is believed to be accurate and reliable. However, no responsibility is assumed for its use. Linear Technology Corporation makes no representation that the interconnection of its circuits as described herein will not infringe on existing patent rights.

TYPICAL APPLICATION

Transitional Elliptic-Bessel 10th Order Lowpass Filter

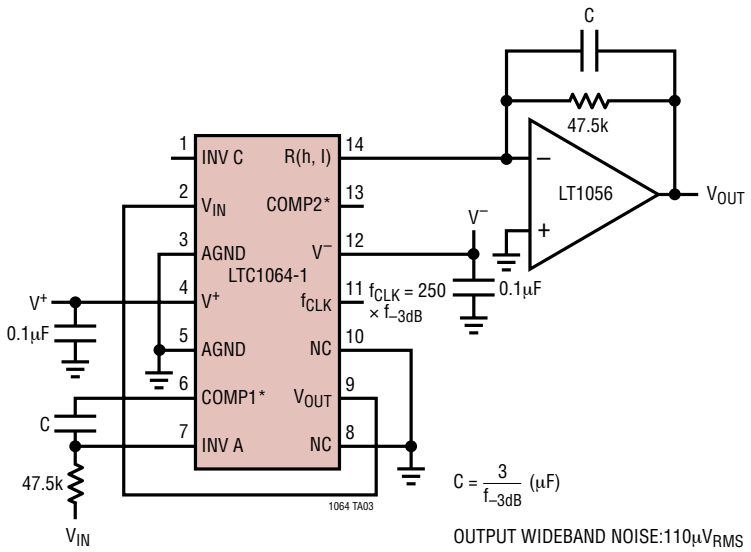

Amplitude Response

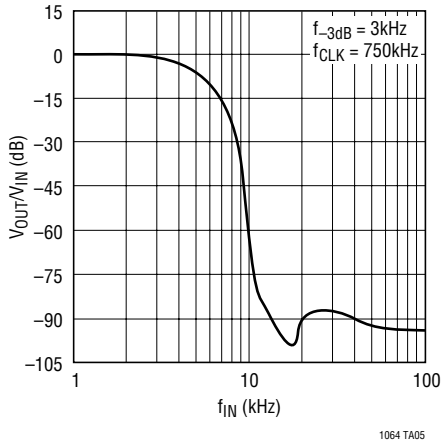

Transient Response to a 2V Step Input

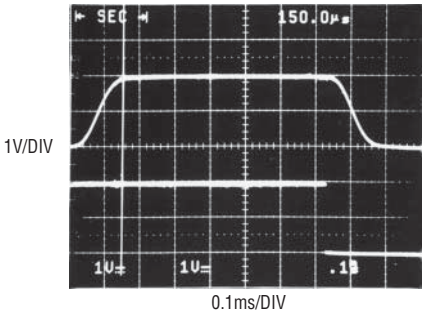

RELATED PARTS

PART NUMBER	DESCRIPTION	COMMENTS
LTC1069-1	8th Order Elliptic Lowpass	S0-8 Package, Low Power
LTC1069-6	Single Supply, 8th Order Elliptic Lowpass	S0-8 Package, Very Low Power
LTC1569-6	DC Accurate, 10th Order, Lowpass	Internal Precision Clock, Low Power
LTC1569-7	DC Accurate, 10th Order, Lowpass	Internal Precision Clock, S0-8 Package

Linear Technology Corporation
1630 McCarthy Blvd., Milpitas, CA 95035-7417
(408) 432-1900 • FAX: (408) 434-0507 • www.linear.com

LW/TP 1202 1K REV A • PRINTED IN USA

© LINEAR TECHNOLOGY CORPORATION 1989