42V, 3.5A Synchronous Step-Down Regulator with Operation to 175°C

FEATURES

- 100% Tested at 175°C
- ±2% Reference Accuracy Over –40°C to 175°C Range
- Wide Input Voltage Range: 3.7V to 42V
- Ultralow Quiescent Current Burst Mode® Operation
- High Efficiency Synchronous Operation
  - 91% Eff. at 0.5A, at 175°C, 3.3V_{OUT} from 12V_{IN}
  - 92% Eff. at 0.5A, at 175°C, 5V_{OUT} from 12V_{IN}
- Adjustable and Synchronizable Frequency: 200kHz to 2.2MHz
- No Thermal Shutdown
- Internal Compensation
- Output Soft-Start and Tracking
- Power Good Flag
- Small Thermally-Enhanced 16-Lead MSOP Package

APPLICATIONS

- Oil and Gas Exploration

DESCRIPTION

The LT®8610AX is a compact, high efficiency, high speed synchronous monolithic step-down switching regulator rated to 175°C junction temperature. The LT8610AX is 100% tested a 175°C. Top and bottom power switches are included with all necessary circuitry to minimize the need for external components. Low ripple Burst Mode operation enables high efficiency across a wide range of output currents while keeping the output ripple low. A SYNC pin allows synchronization to an external clock. Internal compensation with peak current mode topology allows the use of small inductors and results in fast transient response and good loop stability. The EN/UV pin has an accurate 1V threshold and can be used to program V_{IN} undervoltage lockout or to shut down the LT8610AX. A capacitor on the TR/SS pin programs the output voltage ramp rate during startup while the PG flag signals when V_{OUT} is within ±9% of the programmed output voltage as well as fault conditions. The LT8610AX is available in small 16-lead MSOP package with exposed pad for low thermal resistance.

, LT, LTC, LTM, Linear Technology, the Linear logo and Burst Mode are registered trademarks of Linear Technology Corporation. All other trademarks are the property of their respective owners.

TYPICAL APPLICATION

3.3V Step-Down Converter

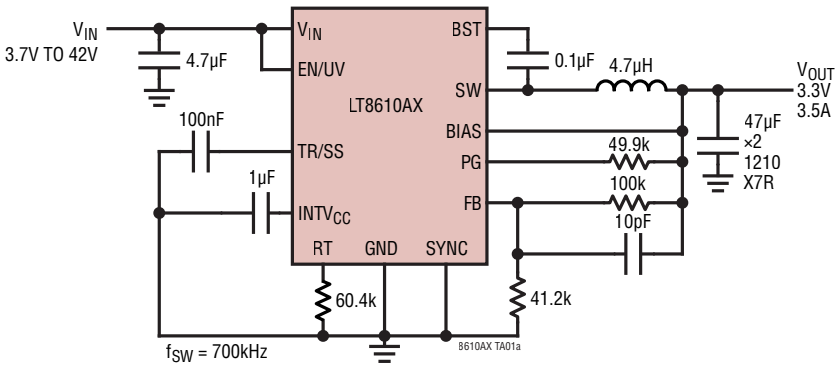

Efficiency at 175°C

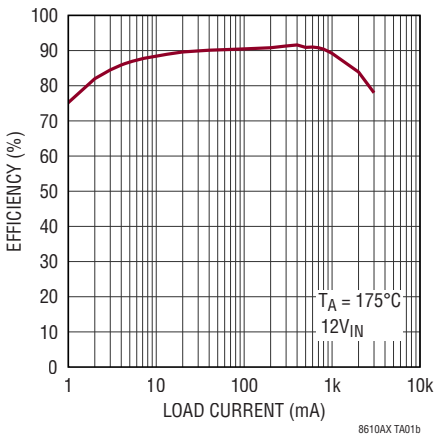

ABSOLUTE MAXIMUM RATINGS

(Note 1)

V_{IN}, EN/UV, PG.....42V
BIAS.....30V
FB, TR/SS Voltage 4V
SYNC Voltage 6V
Operating Junction Temperature Range (Note 2)
LT8610AX.....–40 to 175°C
Storage Temperature Range .....–65 to 150°C

PIN CONFIGURATION

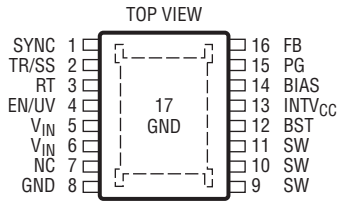

MSE PACKAGE
16-LEAD PLASTIC MSOP

θ_{JA} = 40°C/W, $\theta_{JC(PAD)}$ = 10°C/W
EXPOSED PAD (PIN 17) IS GND, MUST BE SOLDERED TO PCB

ORDER INFORMATION

(http://www.linear.com/product/LT8610AX#orderinfo)

LEAD FREE FINISH	TAPE AND REEL	PART MARKING	PACKAGE DESCRIPTION	TEMPERATURE RANGE
LT8610AXMSE#PBF	LT8610AXMSE#TRPBF	8610AX	16-Lead Plastic MSOP	–40°C to 175°C

Consult LTC Marketing for parts specified with wider operating temperature ranges.

For more information on lead free part marking, go to: http://www.linear.com/leadfree/
For more information on tape and reel specifications, go to: http://www.linear.com/tapeandreel/. Some packages are available in 500 unit reels through designated sales channels with #TRMPBF suffix.

ELECTRICAL CHARACTERISTICS

The ● denotes the specifications which apply over the full operating temperature range, otherwise specifications are at T_A = 25°C.

PARAMETER	CONDITIONS		MIN	TYP	MAX	UNITS
Minimum Input Voltage		●		3.2	3.7	V
V_{IN} Current in Regulation	V_{OUT} = 0.97V, V_{IN} = 6V, Output Load = 100µA V_{OUT} = 0.97V, V_{IN} = 6V, Output Load = 1mA	● ●		26 230	100 400	µA µA
Feedback Reference Voltage	V_{IN} = 12V	 ●	0.966 0.950	0.972 0.970	0.978 0.990	V V
Oscillator Frequency	R_T = 60.4k	●	665	700	735	kHz
PG Upper Threshold Offset from V_{FB}	V_{FB} Falling	●	6	9	12	%
PG Lower Threshold Offset from V_{FB}	V_{FB} Rising	●	–12	–9	–6	%

Note 1: Stresses beyond those listed under Absolute Maximum Ratings may cause permanent damage to the device. Exposure to any Absolute Maximum Rating condition for extended periods may affect device reliability and lifetime.

Note 2: Devices are 100% tested at 175°C to the limits shown. For normal operating temperature range specifications, please see the LT8610A/LT8610AB data sheet. The LT8610AX performance is based on the LT8610AB.

Note 3. The LT8610AX is guaranteed over the full –40°C to 175°C operating junction temperature range. High junction temperatures degrade operating lifetimes. Operating lifetime is derated at junction temperatures greater than 125°C. The LT8610AX has no thermal shutdown.

TYPICAL PERFORMANCE CHARACTERISTICS

Reference Voltage

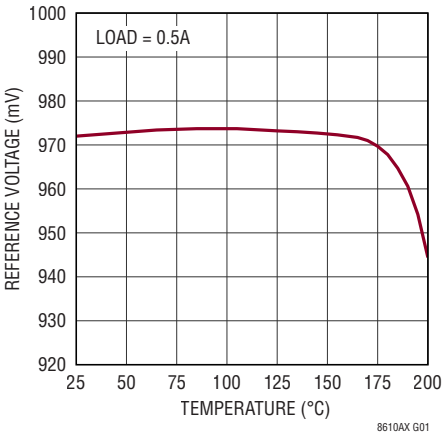

Reference Voltage at 175°C

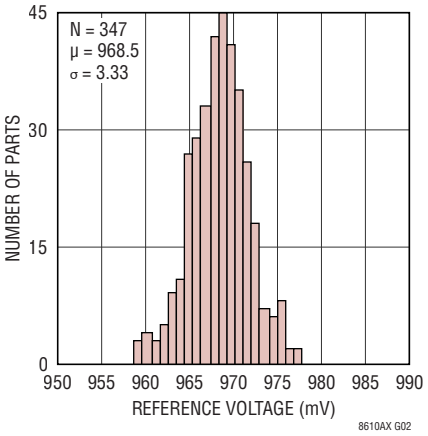

Efficiency at 175°C, V_{OUT} = 3.3V

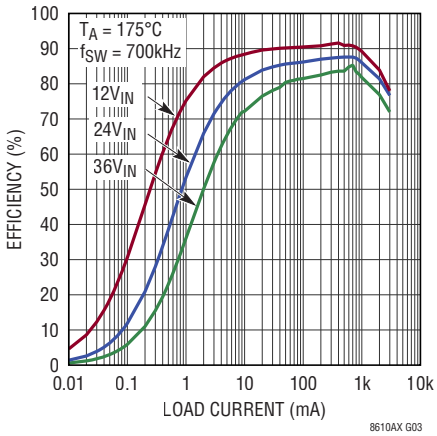

Efficiency at 175°C, V_{OUT} = 3.3V

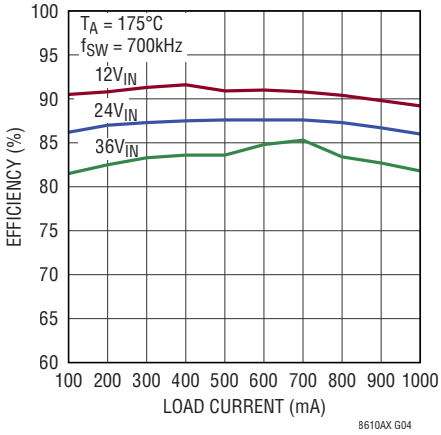

Efficiency at 175°C, V_{OUT} = 5V

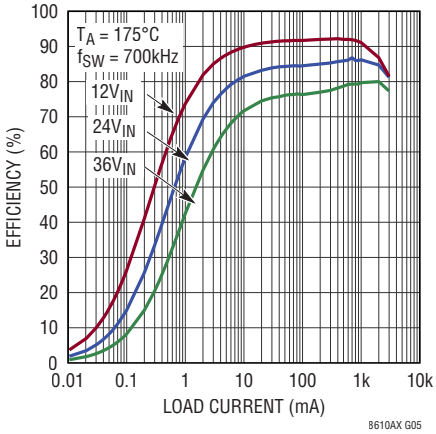

Efficiency at 175°C, V_{OUT} = 5V

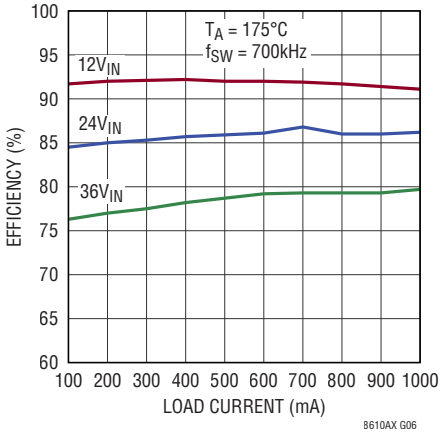

No Load Input Current at 175°C

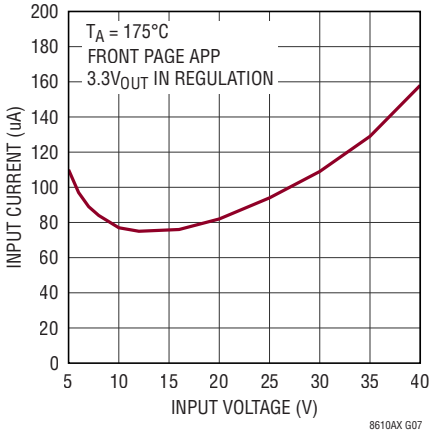

EN Cycling at 175°C

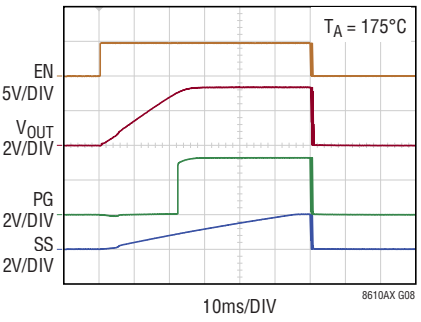

Power Up at 175°C

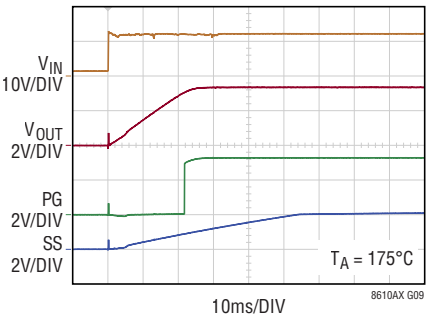

PIN FUNCTIONS

SYNC (Pin 1): External Clock Synchronization Input. Ground this pin for low ripple Burst Mode operation at low output loads. Tie to a clock source for synchronization to an external frequency. Apply a DC voltage of 3V or higher or tie to $INTV_{CC}$ for pulse-skipping mode. When in pulse-skipping mode, the I_Q will increase to several hundred µA. Do not float this pin.

TR/SS (Pin 2): Output Tracking and Soft-Start Pin. This pin allows user control of output voltage ramp rate during start-up. A TR/SS voltage below 0.97V forces the LT8610AX to regulate the FB pin to equal the TR/SS pin voltage. When TR/SS is above 0.97V, the tracking function is disabled and the internal reference resumes control of the error amplifier. An internal 2.2µA pull-up current from $INTV_{CC}$ on this pin allows a capacitor to program output voltage slew rate. This pin is pulled to ground with an internal 230Ω MOSFET during shutdown and fault conditions; use a series resistor if driving from a low impedance output. This pin may be left floating if the tracking function is not needed.

RT (Pin 3): A resistor is tied between RT and ground to set the switching frequency.

EN/UV (Pin 4): The LT8610AX is shut down when this pin is low and active when this pin is high. The hysteretic threshold voltage is 1.00V going up and 0.96V going down. Tie to V_{IN} if the shutdown feature is not used. An external resistor divider from V_{IN} can be used to program a V_{IN} threshold below which the LT8610AX will shut down.

V_{IN} (Pins 5, 6): The V_{IN} pins supply current to the LT8610AX internal circuitry and to the internal topside power switch. These pins must be tied together and be locally bypassed. Be sure to place the positive terminal of the input capacitor as close as possible to the V_{IN} pins, and the negative capacitor terminal as close as possible to the GND pins.

NC (Pin 7): No Connect. This pin is not connected to internal circuitry.

SW (Pins 9, 10, 11): The SW pins are the outputs of the internal power switches. Tie these pins together and connect them to the inductor and boost capacitor. This node should be kept small on the PCB for good performance.

BST (Pin 12): This pin is used to provide a drive voltage, higher than the input voltage, to the topside power switch. Place a 0.1µF boost capacitor as close as possible to the IC.

$INTV_{CC}$ (Pin 13): Internal 3.4V Regulator Bypass Pin. The internal power drivers and control circuits are powered from this voltage. $INTV_{CC}$ maximum output current is 20mA. Do not load the $INTV_{CC}$ pin with external circuitry. $INTV_{CC}$ current will be supplied from BIAS if V_{BIAS} > 3.1V, otherwise current will be drawn from V_{IN}. Voltage on $INTV_{CC}$ will vary between 2.8V and 3.4V when V_{BIAS} is between 3.0V and 3.6V. Decouple this pin to power ground with at least a 1µF low ESR ceramic capacitor placed close to the IC.

BIAS (Pin 14): The internal regulator will draw current from BIAS instead of V_{IN} when BIAS is tied to a voltage higher than 3.1V. For output voltages of 3.3V and above this pin should be tied to V_{OUT}. If this pin is tied to a supply other than V_{OUT} use a 1µF local bypass capacitor on this pin.

PG (Pin 15): The PG pin is the open-drain output of an internal comparator. PG remains low until the FB pin is within ±9% of the final regulation voltage, and there are no fault conditions. PG is valid when V_{IN} is above 3.4V, regardless of EN/UV pin state.

FB (Pin 16): The LT8610AX regulates the FB pin to 0.970V. Connect the feedback resistor divider tap to this pin. Also, connect a phase lead capacitor between FB and V_{OUT}. Typically, this capacitor is 4.7pF to 10pF.

GND (Pin 8, Exposed Pad Pin 17): Ground. These pins are the return path of the internal bottom-side switch and must be tied together. Place the negative terminal of the input capacitor as close to the GND pin and exposed pad as possible. The exposed pad must be soldered to the PCB in order to lower the thermal resistance.

APPLICATIONS INFORMATION

For Application Information, Block Diagram, and Typical Performance Curves from –40°C to 150°C range, please see the LT8610A/LT8610AB Series data sheet. The LT8610AX will perform similarly to the LT8610AB. The LT8610AX has no thermal shutdown.

PACKAGE DESCRIPTION

Please refer to http://www.linear.com/product/LT8610AX#packaging for the most recent package drawings.

MSE Package
16-Lead Plastic MSOP, Exposed Die Pad
(Reference LTC DWG # 05-08-1667 Rev F)

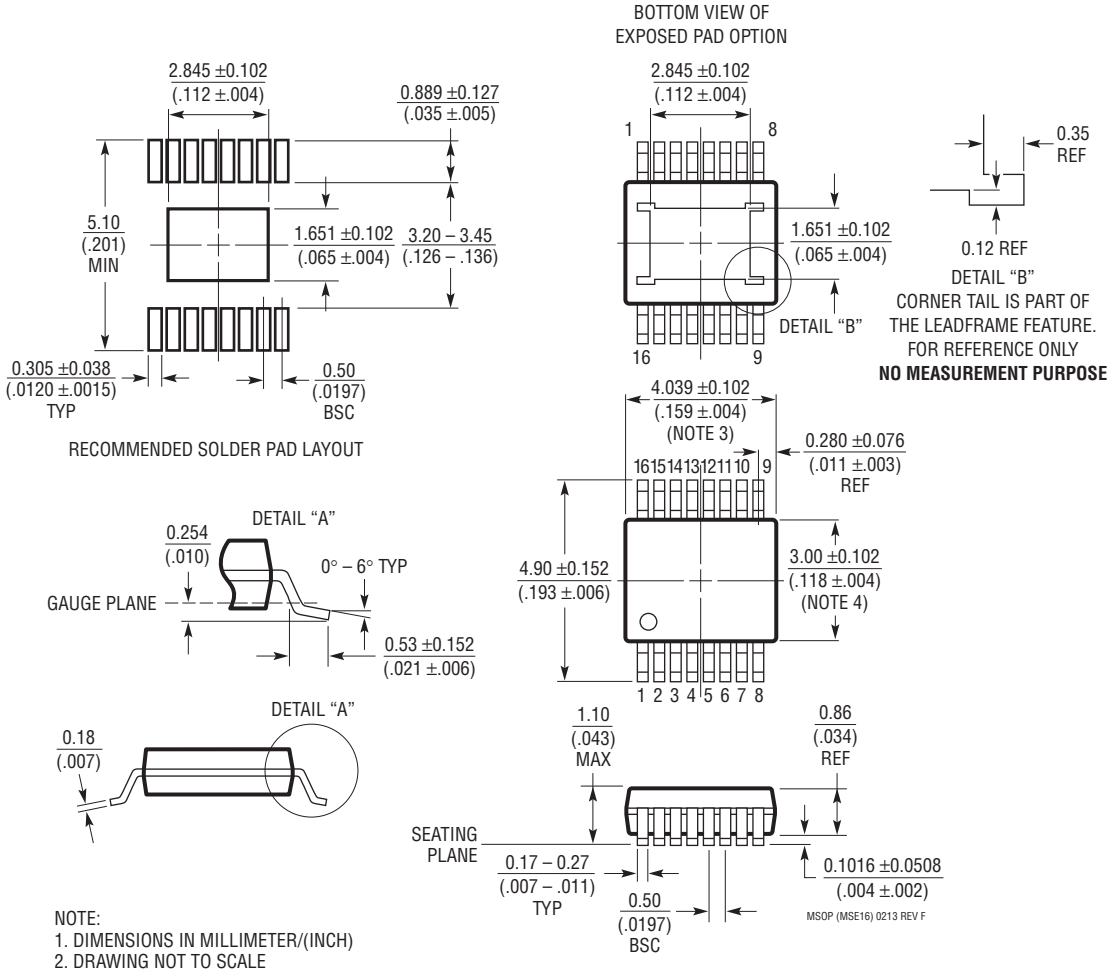

NOTE:
1. DIMENSIONS IN MILLIMETER/(INCH)
2. DRAWING NOT TO SCALE
3. DIMENSION DOES NOT INCLUDE MOLD FLASH, PROTRUSIONS OR GATE BURRS.
   MOLD FLASH, PROTRUSIONS OR GATE BURRS SHALL NOT EXCEED 0.152mm (.006") PER SIDE
4. DIMENSION DOES NOT INCLUDE INTERLEAD FLASH OR PROTRUSIONS.
   INTERLEAD FLASH OR PROTRUSIONS SHALL NOT EXCEED 0.152mm (.006") PER SIDE
5. LEAD COPLANARITY (BOTTOM OF LEADS AFTER FORMING) SHALL BE 0.102mm (.004") MAX
6. EXPOSED PAD DIMENSION DOES INCLUDE MOLD FLASH. MOLD FLASH ON E-PAD SHALL
   NOT EXCEED 0.254mm (.010") PER SIDE.

Information furnished by Linear Technology Corporation is believed to be accurate and reliable. However, no responsibility is assumed for its use. Linear Technology Corporation makes no representation that the interconnection of its circuits as described herein will not infringe on existing patent rights.

RELATED PARTS

PART NUMBER	DESCRIPTION	COMMENTS	PACKAGE
LT1007X	Low Noise 200°C Op Amp	Low Noise, High Speed Precision Operational Amplifier	8-Lead TO-5 Metal Can
LT580X	200°C, 2.5V Voltage Reference	Ultra Low Drift, Curvature Corrected Reference	3-Lead TO-52 Metal Can
LT581X	200°C, 10V Voltage Reference	Ultra Low Drift, Curvature Corrected Reference	3-Lead TO-39 Metal Can
LT582X	200°C, 5V Voltage Reference	Ultra Low Drift, Curvature Corrected Reference	3-Lead TO-39 Metal Can

Linear Technology Corporation
1630 McCarthy Blvd., Milpitas, CA 95035-7417
(408) 432-1900 • FAX: (408) 434-0507 • www.linear.com/LT8610AX
LT 0416 • PRINTED IN USA
© LINEAR TECHNOLOGY CORPORATION 2016