Micropower, Low Voltage, Dual Comparator with 400mV Reference

FEATURES

- **Internal 400mV Reference**
- **Total Threshold Error: ±1.25% Max at 25°C**
- **Inputs and Outputs Operate to 36V**
- **Wide Supply Range: 1.4V to 18V**
- **Specified for –55°C to 125°C Temperature Range**
- Low Quiescent Current: 6.5µA Typ at 5V
- Internal Hysteresis: 6.5mV Typ
- Low Input Bias Current: ±10nA Max
- Over-The-Top® Input also Includes Ground
- Open-Collector Outputs Allow Level Translation
- Choice of Input Polarities: LT6700-1/LT6700-2/LT6700-3/LT6700HV-1/LT6700HV-2/LT6700HV-3
- Available in Low Profile (1mm) SOT-23 (ThinSOT™) and 2mm × 3mm DFN Packages

APPLICATIONS

- Battery-Powered System Monitoring
- Threshold Detectors
- Window Comparators
- Relay Driving
- Industrial Control Systems
- Handheld Instruments
- Automotive Monitor and Controls

DESCRIPTION

The LT®6700/LT6700HV combine two micropower, low voltage comparators with a 400mV reference in a 6-lead SOT-23 or tiny DFN package. Operating with supplies from 1.4V up to 18V, these devices draw only 6.5µA, making them ideal for low voltage system monitoring. Hysteresis is included in the comparators, easing design requirements to insure stable output operation.

The comparators each have one input available externally; the other inputs are connected internally to the reference. The comparator outputs are open collector and the output load can be referred to any voltage up to 18V (36V for LT6700HV), independent of supply voltage. The output stage sinking capability is guaranteed to be greater than 5mA over temperature.

The three versions of this part differ by the polarity of the available comparator inputs. The LT6700-1/LT6700HV-1 has one inverting input and one noninverting input, making it suitable for use as a window comparator. The LT6700-2/LT6700HV-2 has two inverting inputs and the LT6700-3/LT6700HV-3 has two noninverting inputs. All versions are offered in commercial, industrial and automotive temperature ranges.

, LT, LTC, LTM, Linear Technology, the Linear logo and Over-The-Top are registered trademarks and ThinSOT and PowerPath are trademarks of Linear Technology Corporation. All other trademarks are the property of their respective owners.

TYPICAL APPLICATION

Micropower Battery Monitor

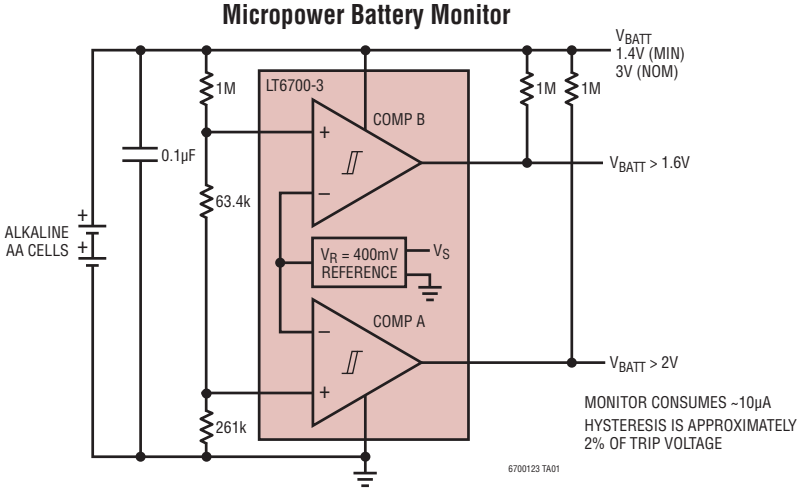

Comparator Thresholds vs Temperature

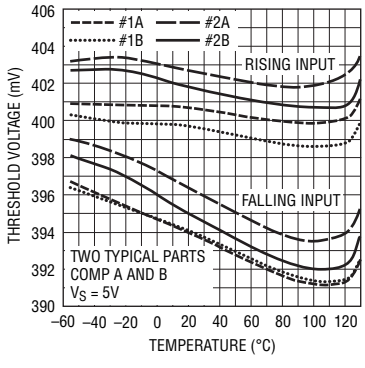

ABSOLUTE MAXIMUM RATINGS (Note 1)

Total Supply Voltage (V_S to GND) 18.5V
Input Voltage (+IN, –IN)
LT6700 (Note 3) ..... 18.5V to (GND – 0.3V)
LT6700HV (Note 3) ..... 40V to (GND – 0.3V)
LT6700 Output Voltage (OUT) ..... 18.5V to (GND – 0.3V)
LT6700HV Output Voltage (OUT) ... 40V to (GND – 0.3V)
Output Short-Circuit Duration (Note 2) ..... Indefinite
Input Current (Note 3).....–10mA
Operating Temperature Range (Note 4)
LT6700CS6/LT6700HVCS6/
LT6700CDCB-1/-2/-3 .....–40°C to 85°C
LT6700IS6/LT6700HVIS6/
LT6700IDCB-1/-2/-3 .....–40°C to 85°C
LT6700HS6/LT6700HVHS6/
LT6700HDCB-1/-2/-3 .....–40°C to 125°C
LT6700MPDCB/
LT6700MPS6-1/-2/-3 .....–55°C to 125°C
Specified Temperature Range (Note 5)
LT6700CS6/LT6700HVCS6/
LT6700CDCB-1/-2/-3 ..... 0°C to 70°C
LT6700IS6/LT6700HVIS6/
LT6700IDCB-1/-2/-3 .....–40°C to 85°C
LT6700HS6/LT6700HVHS6/
LT6700HDCB-1/-2/-3 .....–40°C to 125°C
LT6700MPDCB/
LT6700PMS6-1/-2/-3 .....–55°C to 125°C
Maximum Junction Temperature
S6 Package ..... 150°C
DCB6 Package ..... 150°C
Storage Temperature Range
S6 Package .....–65°C to 150°C
DCB6 Package .....–65°C to 150°C
Lead Temperature, TSOT-23 (Soldering, 10 sec)... 300°C

PIN CONFIGURATION

LT6700-1
LT6700HV-1

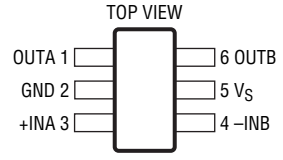

S6 PACKAGE
6-LEAD PLASTIC TSOT-23
T_{JMAX} = 150°C, θ_{JA} = 230°C/W

LT6700-2
LT6700HV-2

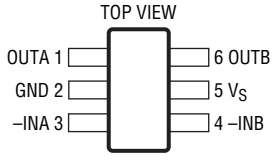

S6 PACKAGE
6-LEAD PLASTIC TSOT-23
T_{JMAX} = 150°C, θ_{JA} = 230°C/W

LT6700-3
LT6700HV-3

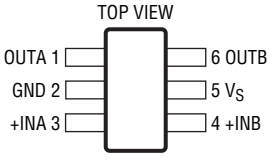

S6 PACKAGE
6-LEAD PLASTIC TSOT-23
T_{JMAX} = 150°C, θ_{JA} = 230°C/W

LT6700-1

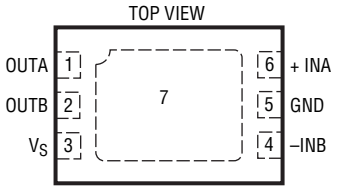

DCB6 PACKAGE
6-LEAD (2mm × 3mm) PLASTIC DFN
T_{JMAX} = 125°C, θ_{JA} = 64°C/W
SOLDERED EXPOSED PAD (PIN 7)
INTERNALLY CONNECTED TO GND
(PCB CONNECTION OPTIONAL)

LT6700-2

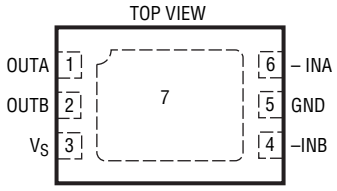

DCB6 PACKAGE
6-LEAD (2mm × 3mm) PLASTIC DFN
T_{JMAX} = 125°C, θ_{JA} = 64°C/W
SOLDERED EXPOSED PAD (PIN 7)
INTERNALLY CONNECTED TO GND
(PCB CONNECTION OPTIONAL)

LT6700-3

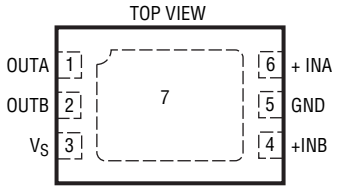

DCB6 PACKAGE
6-LEAD (2mm × 3mm) PLASTIC DFN
T_{JMAX} = 125°C, θ_{JA} = 64°C/W
SOLDERED EXPOSED PAD (PIN 7)
INTERNALLY CONNECTED TO GND
(PCB CONNECTION OPTIONAL)

ORDER INFORMATION

Lead Free Finish

TAPE AND REEL (MINI)	TAPE AND REEL	PART MARKING*	PACKAGE DESCRIPTION	SPECIFIED TEMPERATURE RANGE
LT6700CS6-1#TRMPBF	LT6700CS6-1#TRPBF	LTK7	6-Lead Plastic TSOT-23	0°C to 70°C
LT6700HVCS6-1#TRMPBF	LT6700HVCS6-1#TRPBF	LTK7	6-Lead Plastic TSOT-23	0°C to 70°C
LT6700IS6-1#TRMPBF	LT6700IS6-1#TRPBF	LTK7	6-Lead Plastic TSOT-23	–40°C to 85°C
LT6700HVIS6-1#TRMPBF	LT6700HVIS6-1#TRPBF	LTK7	6-Lead Plastic TSOT-23	–40°C to 85°C
LT6700HS6-1#TRMPBF	LT6700HS6-1#TRPBF	LTK7	6-Lead Plastic TSOT-23	–40°C to 125°C
LT6700HVHS6-1#TRMPBF	LT6700HVHS6-1#TRPBF	LTK7	6-Lead Plastic TSOT-23	–40°C to 125°C
LT6700MPS6-1#TRMPBF	LT6700MPS6-1#TRPBF	LTK7	6-Lead Plastic TSOT-23	–55°C to 125°C
LT6700CS6-2#TRMPBF	LT6700CS6-2#TRPBF	LTADL	6-Lead Plastic TSOT-23	0°C to 70°C
LT6700HVCS6-2#TRMPBF	LT6700HVCS6-2#TRPBF	LTADL	6-Lead Plastic TSOT-23	0°C to 70°C
LT6700IS6-2#TRMPBF	LT6700IS6-2#TRPBF	LTADL	6-Lead Plastic TSOT-23	–40°C to 85°C
LT6700HVIS6-2#TRMPBF	LT6700HVIS6-2#TRPBF	LTADL	6-Lead Plastic TSOT-23	–40°C to 85°C
LT6700HS6-2#TRMPBF	LT6700HS6-2#TRPBF	LTADL	6-Lead Plastic TSOT-23	–40°C to 125°C
LT6700HVHS6-2#TRMPBF	LT6700HVHS6-2#TRPBF	LTADL	6-Lead Plastic TSOT-23	–40°C to 125°C
LT6700MPS6-2#TRMPBF	LT6700MPS6-2#TRPBF	LTADL	6-Lead Plastic TSOT-23	–55°C to 125°C
LT6700CS6-3#TRMPBF	LT6700CS6-3#TRPBF	LTADM	6-Lead Plastic TSOT-23	0°C to 70°C
LT6700HVCS6-3#TRMPBF	LT6700HVCS6-3#TRPBF	LTADM	6-Lead Plastic TSOT-23	0°C to 70°C
LT6700IS6-3#TRMPBF	LT6700IS6-3#TRPBF	LTADM	6-Lead Plastic TSOT-23	–40°C to 85°C
LT6700HVIS6-3#TRMPBF	LT6700HVIS6-3#TRPBF	LTADM	6-Lead Plastic TSOT-23	–40°C to 85°C
LT6700HS6-3#TRMPBF	LT6700HS6-3#TRPBF	LTADM	6-Lead Plastic TSOT-23	–40°C to 125°C
LT6700HVHS6-3#TRMPBF	LT6700HVHS6-3#TRPBF	LTADM	6-Lead Plastic TSOT-23	–40°C to 125°C
LT6700MPS6-3#TRMPBF	LT6700MPS6-2 #TRPBF	LTADM	6-Lead Plastic TSOT-23	–55°C to 125°C
LT6700CDCB-1#TRMPBF	LT6700CDCB-1#TRPBF	LBXW	6-Lead (2mm × 3mm) Plastic DFN	0°C to 70°C
LT6700IDCB-1#TRMPBF	LT6700IDCB-1#TRPBF	LBXW	6-Lead (2mm × 3mm) Plastic DFN	–40°C to 85°C
LT6700HDCB-1#TRMPBF	LT6700HDCB-1#TRPBF	LBXW	6-Lead (2mm × 3mm) Plastic DFN	–40°C to 125°C
LT6700MPDCB-1#TRMPBF	LT6700MPDCB-1#TR	LDVS	6-Lead (2mm × 3mm) Plastic DFN	–55°C to 125°C
LT6700CDCB-2#TRMPBF	LT6700CDCB-2#TRPBF	LBXX	6-Lead (2mm × 3mm) Plastic DFN	0°C to 70°C
LT6700IDCB-2#TRMPBF	LT6700IDCB-2#TRPBF	LBXX	6-Lead (2mm × 3mm) Plastic DFN	–40°C to 85°C
LT6700HDCB-2#TRMPBF	LT6700HDCB-2#TRPBF	LBXX	6-Lead (2mm × 3mm) Plastic DFN	–40°C to 125°C
LT6700MPDCB-2#TRMPBF	LT6700MPDCB-2#TR	LDVT	6-Lead (2mm × 3mm) Plastic DFN	–55°C to 125°C
LT6700CDCB-3#TRMPBF	LT6700CDCB-3#TRPBF	LBXY	6-Lead (2mm × 3mm) Plastic DFN	0°C to 70°C
LT6700IDCB-3#TRMPBF	LT6700IDCB-3#TRPBF	LBXY	6-Lead (2mm × 3mm) Plastic DFN	–40°C to 85°C
LT6700HDCB-3#TRMPBF	LT6700HDCB-3#TRPBF	LBXY	6-Lead (2mm × 3mm) Plastic DFN	–40°C to 125°C
LT6700MPDCB-3#TRMPBF	LT6700MPDCB-3#TR	LDVV	6-Lead (2mm × 3mm) Plastic DFN	–55°C to 125°C

TRM = 500 pieces. *Temperature grades are identified by a label on the shipping container.

Consult LTC Marketing for parts specified with wider operating temperature ranges.
Consult LTC Marketing for information on lead based finish parts.

For more information on lead free part marking, go to: http://www.linear.com/leadfree/
For more information on tape and reel specifications, go to: http://www.linear.com/tapeandreel/

ELECTRICAL CHARACTERISTICS

T_A = 25°C, (LT6700-1/LT6700-2/LT6700-3) unless otherwise specified.

SYMBOL	PARAMETER	CONDITIONS	MIN	TYP	MAX	UNITS
$V_{TH(R)}$	Rising Input Threshold Voltage (Note 6)	R_L = 100k, V_O = 2V Swing				
		V_S = 1.4V	394	400	406	mV
		V_S = 5V	395	400	405	mV
		V_S = 12V	393	400	407	mV
		V_S = 18V	392	400	408	mV
$V_{TH(F)}$	Falling Input Threshold Voltage (Note 6)	R_L = 100k, V_O = 2V Swing				
		V_S = 1.4V	386	393.5	401	mV
		V_S = 5V	387	393.5	400	mV
		V_S = 12V	385	393.5	402	mV
		V_S = 18V	384	393.5	403	mV
HYS	HYS = $V_{TH(R)} – V_{TH(F)}$	V_S = 1.4V, 5V, 12V, 18V, R_L = 100k, V_O = 2V Swing	3.5	6.5	9.5	mV
I_B	Input Bias Current	V_S = 1.4V, 18V, $V_{IN} = V_S$		±0.01	±10	nA
		V_S = 1.4V, V_{IN} = 18V		±0.01	±10	nA
		V_S = 1.4V, 18V, V_{IN} = 0.1V		±4	±10	nA
V_{OL}	Output Low Voltage	10mV Input Overdrive				
		V_S = 1.4V, I_{OUT} = 0.5mA		55	200	mV
		V_S = 1.6V, I_{OUT} = 3mA		60	200	mV
		V_S = 5V, I_{OUT} = 5mA		70	200	mV
I_{OFF}	Output Leakage Current	V_S = 1.4V, 18V, $V_{OUT} = V_S$, V_{IN} = 40mV Overdrive		0.01	0.8	µA
		V_S = 1.4V, V_{OUT} = 18V, V_{IN} = 40mV Overdrive		0.01	0.8	µA
$t_{PD(HL)}$	High-to-Low Propagation Delay	V_S = 5V, 10mV Input Overdrive, R_L = 10k, V_{OL} = 400mV		18		µs
$t_{PD(LH)}$	Low-to-High Propagation Delay	V_S = 5V, 10mV Input Overdrive, R_L = 10k, $V_{OH} = 0.9 • V_S$		29		µs
t_r	Output Rise Time	V_S = 5V, 10mV Input Overdrive, R_L = 10k V_O = (0.1 to 0.9) • V_S		2.2		µs
t_f	Output Fall Time	V_S = 5V, 10mV Input Overdrive, R_L = 10k V_O = (0.1 to 0.9) • V_S		0.22		µs
I_S	Supply Current	No Load Current				
		V_S = 1.4V		5.7	10.0	µA
		V_S = 5V		6.5	11.0	µA
		V_S = 12V		6.9	12.5	µA
		V_S = 18V		7.1	13.0	µA

The ● denotes the specifications which apply over the temperature range of 0°C ≤ T_A ≤ 70°C, (LT6700C-1/LT6700C-2/LT6700C-3) unless otherwise specified (Notes 4, 5).

SYMBOL	PARAMETER	CONDITIONS		MIN	TYP	MAX	UNITS
$V_{TH(R)}$	Rising Input Threshold Voltage (Note 6)	R_L = 100k, V_O = 2V Swing					
		V_S = 1.4V	●	391.0		409.0	mV
		V_S = 5V	●	392.5		407.5	mV
		V_S = 12V	●	390.0		410.0	mV
		V_S = 18V	●	389.0		411.0	mV
$V_{TH(F)}$	Falling Input Threshold Voltage (Note 6)	R_L = 100k, V_O = 2V Swing					
		V_S = 1.4V	●	383.5		403.5	mV
		V_S = 5V	●	384.5		402.5	mV
		V_S = 12V	●	382.5		404.5	mV
		V_S = 18V	●	381.5		405.5	mV

ELECTRICAL CHARACTERISTICS

The ● denotes the specifications which apply over the temperature range of 0°C ≤ T_A ≤ 70°C, (LT6700C-1/LT6700C-2/LT6700C-3) unless otherwise specified (Notes 4, 5).

SYMBOL	PARAMETER	CONDITIONS		MIN	TYP	MAX	UNITS
HYS	HYS = $V_{TH(R)} – V_{TH(F)}$	V_S = 1.4V, 5V, 12V, 18V, R_L = 100k, V_O = 2V Swing	●	3		11	mV
I_B	Input Bias Current	V_S = 1.4V, 18V, $V_{IN} = V_S$	●			±15	nA
		V_S = 1.4V, V_{IN} = 18V	●			±15	nA
		V_S = 1.4V, 18V, V_{IN} = 0.1V	●			±15	nA
V_{OL}	Output Low Voltage	10mV Input Overdrive					
		V_S = 1.4V, I_{OUT} = 0.5mA	●			250	mV
		V_S = 1.6V, I_{OUT} = 3mA	●			250	mV
		V_S = 5V, I_{OUT} = 5mA	●			250	mV
I_{OFF}	Output Leakage Current	V_S = 1.4V, 18V, $V_{OUT} = V_S$, V_{IN} = 40mV Overdrive	●			1	µA
		V_S = 1.4V, V_{OUT} = 18V, V_{IN} = 40mV Overdrive	●			1	µA
I_S	Supply Current	No Load Current					
		V_S = 1.4V	●			13.0	µA
		V_S = 5V	●			14.0	µA
		V_S = 12V	●			15.5	µA
		V_S = 18V	●			16.0	µA

The ● denotes the specifications which apply over the temperature range of –40°C ≤ T_A ≤ 85°C, (LT6700I-1/LT6700I-2/LT6700I-3) unless otherwise specified (Notes 4, 5).

SYMBOL	PARAMETER	CONDITIONS		MIN	TYP	MAX	UNITS
$V_{TH(R)}$	Rising Input Threshold Voltage (Note 6)	R_L = 100k, V_O = 2V Swing					
		V_S = 1.4V	●	390		410	mV
		V_S = 5V	●	392		408	mV
		V_S = 12V	●	389		411	mV
		V_S = 18V	●	388		412	mV
$V_{TH(F)}$	Falling Input Threshold Voltage (Note 6)	R_L = 100k, V_O = 2V Swing					
		V_S = 1.4V	●	382.5		404.5	mV
		V_S = 5V	●	383.5		403.5	mV
		V_S = 12V	●	381.5		405.5	mV
		V_S = 18V	●	380.5		406.5	mV
HYS	HYS = $V_{TH(R)} – V_{TH(F)}$	V_S = 1.4V, 5V, 12V, 18V, R_L = 100k, V_O = 2V Swing	●	2		11.5	mV
I_B	Input Bias Current	V_S = 1.4V, 18V, $V_{IN} = V_S$	●			±15	nA
		V_S = 1.4V, V_{IN} = 18V	●			±15	nA
		V_S = 1.4V, 18V, V_{IN} = 0.1V	●			±15	nA
V_{OL}	Output Low Voltage	10mV Input Overdrive					
		V_S = 1.4V, I_{OUT} = 0.1mA	●			250	mV
		V_S = 1.6V, I_{OUT} = 3mA	●			250	mV
		V_S = 5V, I_{OUT} = 5mA	●			250	mV
I_{OFF}	Output Leakage Current	V_S = 1.4V, 18V, $V_{OUT} = V_S$, V_{IN} = 40mV Overdrive	●			1	µA
		V_S = 1.4V, V_{OUT} = 18V, V_{IN} = 40mV Overdrive	●			1	µA
I_S	Supply Current	No Load Current					
		V_S = 1.4V	●			14.0	µA
		V_S = 5V	●			15.0	µA
		V_S = 12V	●			16.5	µA
		V_S = 18V	●			17.0	µA

ELECTRICAL CHARACTERISTICS

The ● denotes the specifications which apply over the temperature range of –40°C ≤ T_A ≤ 125°C, (LT6700H-1/LT6700H-2/LT6700H-3) unless otherwise specified (Notes 4, 5).

SYMBOL	PARAMETER	CONDITIONS		LT6700H MIN	LT6700H TYP	LT6700H MAX	UNITS
$V_{TH(R)}$	Rising Input Threshold Voltage (Note 6)	R_L = 100k, V_O = 2V Swing					
		V_S = 1.4V	●	390		411	mV
		V_S = 5V	●	392		410	mV
		V_S = 12V	●	389		412	mV
		V_S = 18V	●	388		413	mV
$V_{TH(F)}$	Falling Input Threshold Voltage (Note 6)	R_L = 100k, V_O = 2V Swing					
		V_S = 1.4V	●	381.5		405.5	mV
		V_S = 5V	●	382.5		404.5	mV
		V_S = 12V	●	380.5		406.5	mV
		V_S = 18V	●	379.5		407.5	mV
HYS	HYS = $V_{TH(R)} – V_{TH(F)}$	V_S = 1.4V, 5V, 12V, 18V, R_L = 100k, V_O = 2V Swing	●	2		13.5	mV
I_B	Input Bias Current	V_S = 1.4V, 18V, $V_{IN} = V_S$	●			±45	nA
		V_S = 1.4V, V_{IN} = 18V	●			±45	nA
		V_S = 1.4V, 18V, V_{IN} = 100mV	●			±50	nA
V_{OL}	Output Low Voltage	10mV Input Overdrive					
		V_S = 1.4V, I_{OUT} = 0.1mA	●			250	mV
		V_S = 1.6V, I_{OUT} = 3mA	●			250	mV
		V_S = 5V, I_{OUT} = 5mA	●			250	mV
I_{OFF}	Output Leakage Current	V_S = 1.4V, 18V, $V_{OUT} = V_S$, V_{IN} = 40mV Overdrive	●			1	µA
		V_S = 1.4V, V_{OUT} = 18V, V_{IN} = 40mV Overdrive	●			1	µA
I_S	Supply Current	No Load Current					
		V_S = 1.4V	●			16.0	µA
		V_S = 5V	●			17.0	µA
		V_S = 12V	●			18.5	µA
		V_S = 18V	●			19.0	µA

The ● denotes the specifications which apply over the temperature range of –55°C ≤ T_A ≤ 125°C, (LT6700MP-1/LT6700MP-2/LT6700MP-3) unless otherwise specified (Notes 4, 5).

SYMBOL	PARAMETER	CONDITIONS		LT6700H MIN	LT6700H TYP	LT6700H MAX	UNITS
$V_{TH(R)}$	Rising Input Threshold Voltage (Note 6)	R_L = 100k, V_O = 2V Swing					
		V_S = 1.4V	●	390		411	mV
		V_S = 5V	●	392		410	mV
		V_S = 12V	●	389		412	mV
		V_S = 18V	●	388		413	mV
$V_{TH(F)}$	Falling Input Threshold Voltage (Note 6)	R_L = 100k, V_O = 2V Swing					
		V_S = 1.4V	●	381.5		405.5	mV
		V_S = 5V	●	382.5		404.5	mV
		V_S = 12V	●	380.5		406.5	mV
		V_S = 18V	●	379.5		407.5	mV
HYS	HYS = $V_{TH(R)} – V_{TH(F)}$	V_S = 1.4V, 5V, 12V, 18V, R_L = 100k, V_O = 2V Swing	●	2		13.5	mV
I_B	Input Bias Current	V_S = 1.4V, 18V, $V_{IN} = V_S$	●			±45	nA
		V_S = 1.4V, V_{IN} = 18V	●			±45	nA
		V_S = 1.4V, 18V, V_{IN} = 100mV	●			±50	nA
V_{OL}	Output Low Voltage	10mV Input Overdrive					
		V_S = 1.4V, I_{OUT} = 0.1mA	●			250	mV
		V_S = 1.6V, I_{OUT} = 3mA	●			250	mV
		V_S = 5V, I_{OUT} = 5mA	●			250	mV

ELECTRICAL CHARACTERISTICS

The ● denotes the specifications which apply over the temperature range of –55°C ≤ T_A ≤ 125°C, (LT6700MP-1/LT6700MP-2/LT6700MP-3) unless otherwise specified (Notes 4, 5).

SYMBOL	PARAMETER	CONDITIONS		LT6700H MIN	LT6700H TYP	LT6700H MAX	UNITS
I_{OFF}	Output Leakage Current	V_S = 1.4V, 18V, V_{OUT} = V_S, V_{IN} = 40mV Overdrive	●			1	µA
		V_S = 18V, V_{OUT} = 18V, V_{IN} = 40mV Overdrive	●			1	µA
I_S	Supply Current	No Load Current					
		V_S = 1.4V	●			16.0	µA
		V_S = 5V	●			17.0	µA
		V_S = 12V	●			18.5	µA
		V_S = 18V	●			19.0	µA

T_A = 25°C, (LT6700HV-1/LT6700HV-2/LT6700HV-3) unless otherwise specified.

SYMBOL	PARAMETER	CONDITIONS	MIN	TYP	MAX	UNITS
$V_{TH(R)}$	Rising Input Threshold Voltage (Note 6)	R_L = 100k, V_O = 2V Swing				
		V_S = 1.4V	394	400	406	mV
		V_S = 5V	395	400	405	mV
		V_S = 12V	393	400	407	mV
		V_S = 18V	392	400	408	mV
$V_{TH(F)}$	Falling Input Threshold Voltage (Note 6)	R_L = 100k, V_O = 2V Swing				
		V_S = 1.4V	386	393.5	401	mV
		V_S = 5V	387	393.5	400	mV
		V_S = 12V	385	393.5	402	mV
		V_S = 18V	384	393.5	403	mV
HYS	HYS = $V_{TH(R)} – V_{TH(F)}$	V_S = 1.4V, 5V, 12V, 18V, R_L = 100k, V_O = 2V Swing	3.5	6.5	9.5	mV
I_B	Input Bias Current	V_S = 1.4V, 18V, V_{IN} = V_S		±0.01	±10	nA
		V_S = 1.4V, V_{IN} = 18V, 36V		±0.01	±10	nA
		V_S = 1.4V, 18V, V_{IN} = 0.1V		±4	±10	nA
V_{OL}	Output Low Voltage	10mV Input Overdrive				
		V_S = 1.4V, I_{OUT} = 0.5mA		55	200	mV
		V_S = 1.6V, I_{OUT} = 3mA		60	200	mV
		V_S = 5V, I_{OUT} = 5mA		70	200	mV
I_{OFF}	Output Leakage Current	V_S = 1.4V, 18V, V_{OUT} = V_S, V_{IN} = 40mV Overdrive		0.01	0.8	µA
		V_S = 18V, V_{OUT} = 18V, (36V, R_L = 100k), V_{IN} = 40mV Overdrive		0.01	0.8	µA
$t_{PD(HL)}$	High-to-Low Propagation Delay	V_S = 5V, 10mV Input Overdrive, R_L = 10k, V_{OL} = 400mV		18		µs
$t_{PD(LH)}$	Low-to-High Propagation Delay	V_S = 5V, 10mV Input Overdrive, R_L = 10k, V_{OH} = 0.9 • V_S		29		µs
t_r	Output Rise Time	V_S = 5V, 10mV Input Overdrive, R_L = 10k V_O = (0.1 to 0.9) • V_S		2.2		µs
t_f	Output Fall Time	V_S = 5V, 10mV Input Overdrive, R_L = 10k V_O = (0.1 to 0.9) • V_S		0.22		µs
I_S	Supply Current	No Load Current				
		V_S = 1.4V		5.7	10.0	µA
		V_S = 5V		6.5	11.0	µA
		V_S = 12V		6.9	12.5	µA
		V_S = 18V		7.1	13.0	µA

ELECTRICAL CHARACTERISTICS

The ● denotes the specifications which apply over the temperature range of 0°C ≤ T_A ≤ 70°C, (LT6700HVC-1/LT6700HVC-2/LT6700HVC-3) unless otherwise specified (Notes 4, 5).

SYMBOL	PARAMETER	CONDITIONS		MIN	TYP	MAX	UNITS
$V_{TH(R)}$	Rising Input Threshold Voltage (Note 6)	R_L = 100k, V_O = 2V Swing					
		V_S = 1.4V	●	391.0		409.0	mV
		V_S = 5V	●	392.5		407.5	mV
		V_S = 12V	●	390.0		410.0	mV
		V_S = 18V	●	389.0		411.0	mV
$V_{TH(F)}$	Falling Input Threshold Voltage (Note 6)	R_L = 100k, V_O = 2V Swing					
		V_S = 1.4V	●	383.5		403.5	mV
		V_S = 5V	●	384.5		402.5	mV
		V_S = 12V	●	382.5		404.5	mV
		V_S = 18V	●	381.5		405.5	mV
HYS	HYS = $V_{TH(R)} – V_{TH(F)}$	V_S = 1.4V, 5V, 12V, 18V, R_L = 100k, V_O = 2V Swing	●	3		11	mV
I_B	Input Bias Current	V_S = 1.4V, 18V, V_{IN} = V_S	●			±15	nA
		V_S = 1.4V, V_{IN} = 18V, 36V	●			±15	nA
		V_S = 1.4V, 18V, V_{IN} = 0.1V	●			±15	nA
V_{OL}	Output Low Voltage	10mV Input Overdrive					
		V_S = 1.4V, I_{OUT} = 0.5mA	●			250	mV
		V_S = 1.6V, I_{OUT} = 3mA	●			250	mV
		V_S = 5V, I_{OUT} = 5mA	●			250	mV
I_{OFF}	Output Leakage Current	V_S = 1.4V, 18V, V_{OUT} = V_S, V_{IN} = 40mV Overdrive	●			1	µA
		V_S = 18V, V_{OUT} = 18V, (36V, R_L = 100k), V_{IN} = 40mV Overdrive	●			1	µA
I_S	Supply Current	No Load Current					
		V_S = 1.4V	●			13.0	µA
		V_S = 5V	●			14.0	µA
		V_S = 12V	●			15.5	µA
		V_S = 18V	●			16.0	µA

The ● denotes the specifications which apply over the temperature range of –40°C ≤ T_A ≤ 85°C, (LT6700HVI-1/LT6700HVI-2/LT6700HVI-3) unless otherwise specified (Notes 4, 5).

SYMBOL	PARAMETER	CONDITIONS		MIN	TYP	MAX	UNITS
$V_{TH(R)}$	Rising Input Threshold Voltage (Note 6)	R_L = 100k, V_O = 2V Swing					
		V_S = 1.4V	●	390		410	mV
		V_S = 5V	●	392		408	mV
		V_S = 12V	●	389		411	mV
		V_S = 18V	●	388		412	mV
$V_{TH(F)}$	Falling Input Threshold Voltage (Note 6)	R_L = 100k, V_O = 2V Swing					
		V_S = 1.4V	●	382.5		404.5	mV
		V_S = 5V	●	383.5		403.5	mV
		V_S = 12V	●	381.5		405.5	mV
		V_S = 18V	●	380.5		406.5	mV
HYS	HYS = $V_{TH(R)} – V_{TH(F)}$	V_S = 1.4V, 5V, 12V, 18V, R_L = 100k, V_O = 2V Swing	●	2		11.5	mV
I_B	Input Bias Current	V_S = 1.4V, 18V, V_{IN} = V_S	●			±15	nA
		V_S = 1.4V, V_{IN} = 18V, 36V	●			±15	nA
		V_S = 1.4V, 18V, V_{IN} = 0.1V	●			±15	nA
V_{OL}	Output Low Voltage	10mV Input Overdrive					
		V_S = 1.4V, I_{OUT} = 0.1mA	●			250	mV
		V_S = 1.6V, I_{OUT} = 3mA	●			250	mV
		V_S = 5V, I_{OUT} = 5mA	●			250	mV
I_{OFF}	Output Leakage Current	V_S = 1.4V, 18V, V_{OUT} = V_S, V_{IN} = 40mV Overdrive	●			1	µA
		V_S = 18V, V_{OUT} = 18V, (36V, R_L = 100k), V_{IN} = 40mV Overdrive	●			1	µA

ELECTRICAL CHARACTERISTICS

The ● denotes the specifications which apply over the temperature range of –40°C ≤ T_A ≤ 85°C, (LT6700HVI-1/LT6700HVI-2/LT6700HVI-3) unless otherwise specified (Notes 4, 5).

SYMBOL	PARAMETER	CONDITIONS		MIN	TYP	MAX	UNITS
I_S	Supply Current	No Load Current					
		V_S = 1.4V	●			14.0	µA
		V_S = 5V	●			15.0	µA
		V_S = 12V	●			16.5	µA
		V_S = 18V	●			17.0	µA

The ● denotes the specifications which apply over the temperature range of –40°C ≤ T_A ≤ 125°C, (LT6700HVH-1/LT6700HVH-2/ LT6700HVH-3) unless otherwise specified (Notes 4, 5).

SYMBOL	PARAMETER	CONDITIONS		LT6700H MIN	LT6700H TYP	LT6700H MAX	UNITS
$V_{TH(R)}$	Rising Input Threshold Voltage (Note 6)	R_L = 100k, V_O = 2V Swing					
		V_S = 1.4V	●	390		411	mV
		V_S = 5V	●	392		410	mV
		V_S = 12V	●	389		412	mV
		V_S = 18V	●	388		413	mV
$V_{TH(F)}$	Falling Input Threshold Voltage (Note 6)	R_L = 100k, V_O = 2V Swing					
		V_S = 1.4V	●	381.5		405.5	mV
		V_S = 5V	●	382.5		404.5	mV
		V_S = 12V	●	380.5		406.5	mV
		V_S = 18V	●	379.5		407.5	mV
HYS	HYS = $V_{TH(R)} – V_{TH(F)}$	V_S = 1.4V, 5V, 12V, 18V, R_L = 100k, V_O = 2V Swing	●	2		13.5	mV
I_B	Input Bias Current	V_S = 1.4V, 18V, V_{IN} = V_S	●			±45	nA
		V_S = 1.4V, V_{IN} = 18V, 36V	●			±45	nA
		V_S = 1.4V, 18V, V_{IN} = 100mV	●			±50	nA
V_{OL}	Output Low Voltage	10mV Input Overdrive					
		V_S = 1.4V, I_{OUT} = 0.1mA	●			250	mV
		V_S = 1.6V, I_{OUT} = 3mA	●			250	mV
		V_S = 5V, I_{OUT} = 5mA	●			250	mV
I_{OFF}	Output Leakage Current	V_S = 1.4V, 18V, V_{OUT} = V_S, V_{IN} = 40mV Overdrive	●			1	µA
		V_S = 18V, V_{OUT} = 18V, (36V, R_L = 100k), V_{IN} = 40mV Overdrive	●			1	µA
I_S	Supply Current	No Load Current					
		V_S = 1.4V	●			16.0	µA
		V_S = 5V	●			17.0	µA
		V_S = 12V	●			18.5	µA
		V_S = 18V	●			19.0	µA

Note 1: Stresses beyond those listed under Absolute Maximum Ratings may cause permanent damage to the device. Exposure to any Absolute Maximum Rating condition for extended periods may affect device reliability and lifetime.

Note 2: A heat sink may be required to keep the junction temperature below the absolute maximum rating when the output is shorted indefinitely.

Note 3: The inputs are protected by ESD diodes to the ground. If the input voltage exceeds –0.3V below ground, the input current should be limited to less than 10mA.

Note 4: The LT6700C-1/-2/-3/LT6700HVC-1/-2/-3, and LT6700I-1/-2/-3/LT6700HVI-1/-2/-3 are guaranteed functional over the operating temperature range of –40°C to 85°C. The LT6700H-1/-2/-3/ LT6700HVH-1/-2/-3 is guaranteed functional over the operating temperature range of –40°C to 125°C. The LT6700MP-1/-2/-3 is guaranteed functional over the operating temperature range of –55°C to 125°C.

Note 5: The LT6700C-1/-2/-3/LT6700HVC-1/-2/-3 is guaranteed to meet the specified performance from 0°C to 70°C. The LT6700C-1/-2/-3/LT6700HVC-1/-2/-3 are designed, characterized and expected to meet specified performance from –40°C to 85°C but are not tested or QA sampled at these temperatures. The LT6700I-1/-2/-3/LT6700HVI-1/-2/-3 is guaranteed to meet specified performance from –40°C to 85°C. The LT6700H-1/-2/-3/LT6700HVH-1/-2/-3 is guaranteed to meet specified performance from –40°C to 125°C.The LT6700MP-1/-2/-3 is guaranteed to meet specified performance from –55°C to 125°C.

Note 6: V_{TH} defines the threshold voltage of the comparators and combines the effect of offset and reference accuracy.

PIN FUNCTIONS

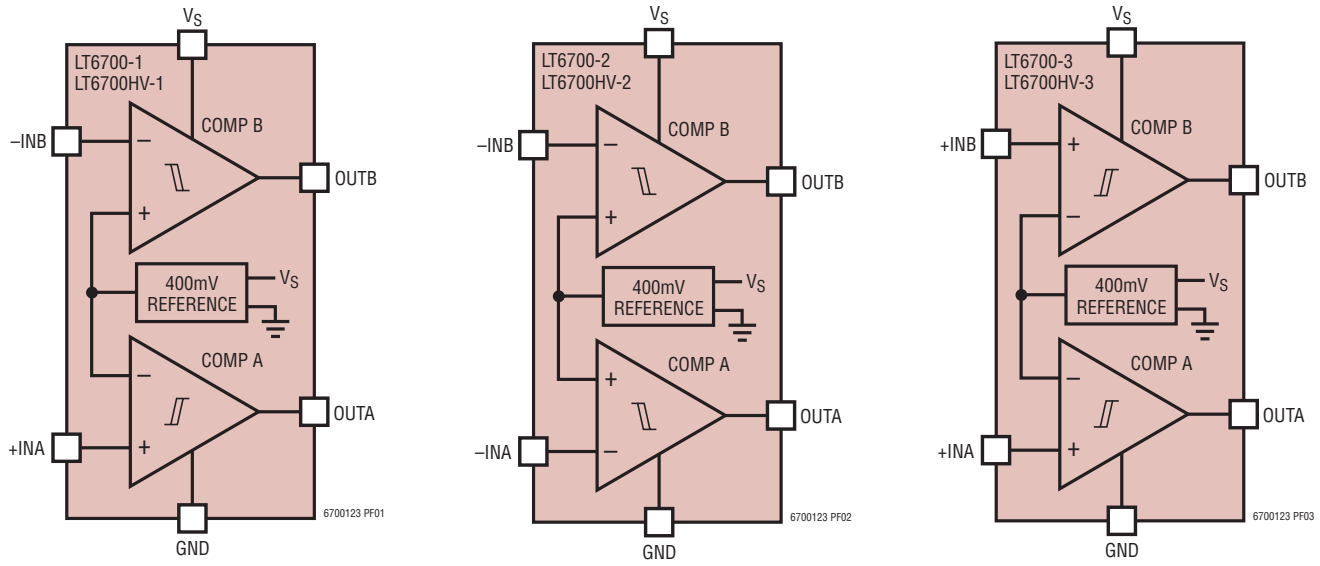

OUTA: Open-Collector Output of Comparator Section A. This pin provides drive for up to 40mA of load current. Off-state voltage may be as high as 18V (36V for LT6700HV) above GND, regardless of V_S used.

GND: Ground. This pin is also the low side return of the internal 400mV reference.

INA: External Input for Comparator Section A. The voltage on this pin can range from –0.3V to 18V (36V for LT6700HV) with respect to GND regardless of V_S used. The input is noninverting for the LT6700-1/LT6700HV-1 and LT6700-3/LT6700HV-3, and inverting for the LT6700-2/LT6700HV-2. The other section A comparator input is internally connected to the 400mV reference.

INB: External Input for Comparator Section B. The voltage on this pin can range from –0.3V to 18V (36V for LT6700HV) with respect to GND regardless of V_S used. The input is noninverting for the LT6700-3/LT6700HV-3, and inverting for the LT6700-1/LT6700HV-1 and LT6700-2/LT6700HV-2. The other section B comparator input is internally connected to the 400mV reference.

V_S: Comparator Core Supply Voltage. The parts are characterized for operation with $1.4V \le V_S \le 18V$ with respect to GND.

OUTB: Open-Collector Output of Comparator Section B. This pin provides drive for up to 40mA of load current. Off-state voltage may be as high as 18V (36V for LT6700HV) above GND, regardless of V_S used.

TYPICAL PERFORMANCE CHARACTERISTICS

Distribution of Rising Input Threshold Voltage

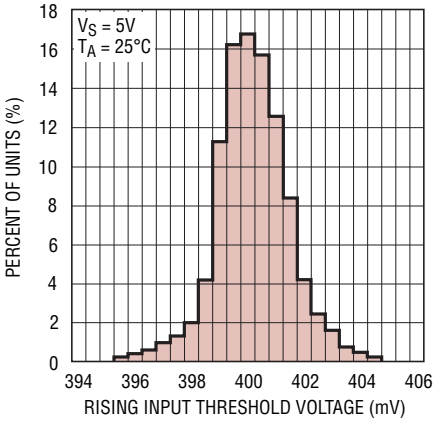

6700123 G01

Distribution of Falling Input Threshold Voltage

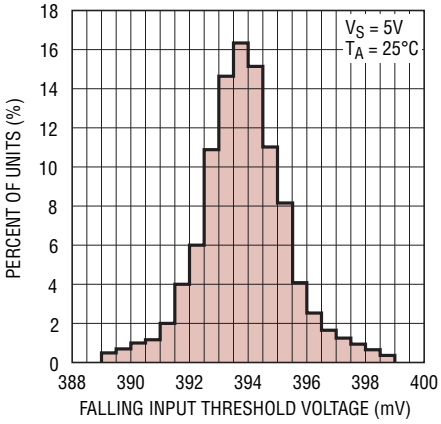

6700123 G02

Distribution of Hysteresis

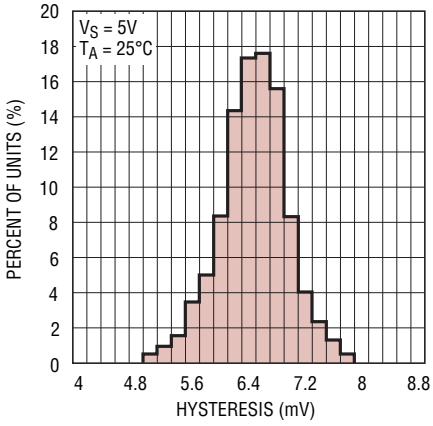

6700123 G03

Rising Input Threshold Voltage vs Temperature

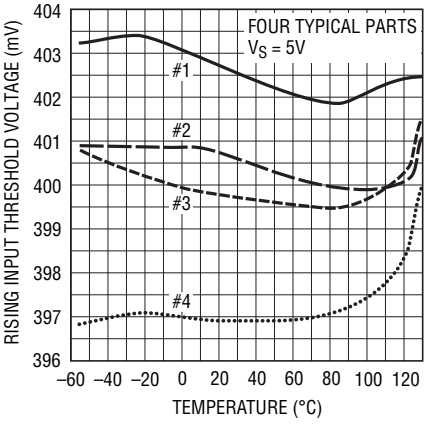

6700123 G04

Rising Input Threshold Voltage vs Temperature

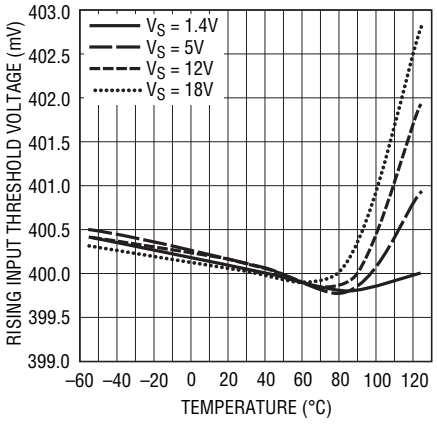

6700123 G05

Rising Input Threshold Voltage vs Supply Voltage

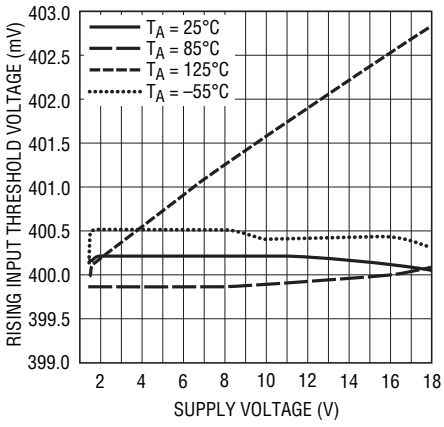

6700123 G06

Hysteresis vs Temperature

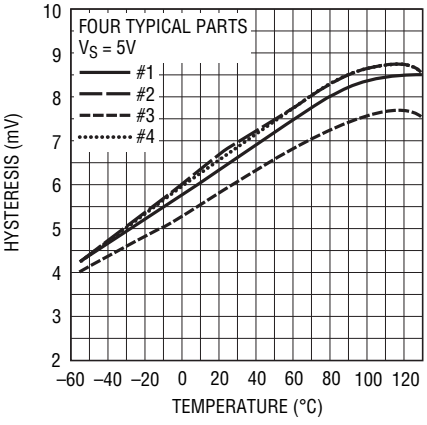

6700123 G07

Hysteresis vs Temperature

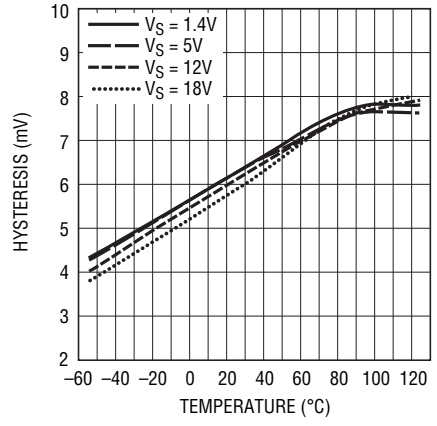

6700123 G08

Hysteresis vs Supply Voltage

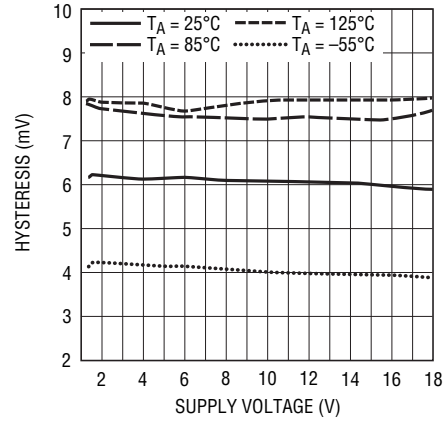

6700123 G09

TYPICAL PERFORMANCE CHARACTERISTICS

Minimum Supply Voltage

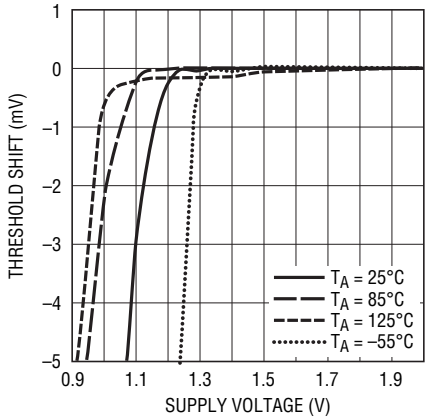

6700123 G10

Quiescent Supply Current vs Supply Voltage

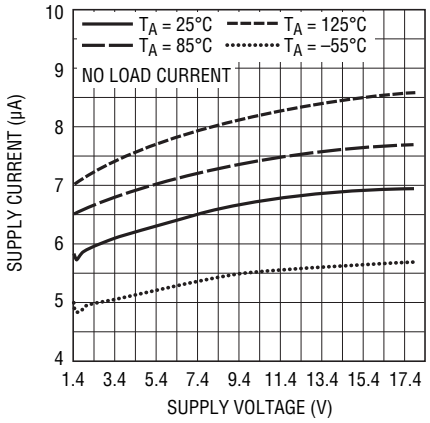

6700123 G11

Start-Up Supply Current

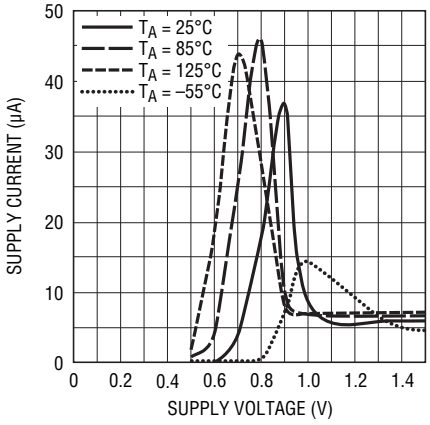

6700123 G12

Supply Current vs Output Sink Current

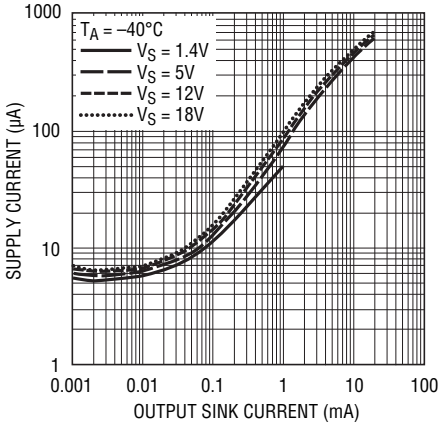

6700123 G13

Supply Current vs Output Sink Current

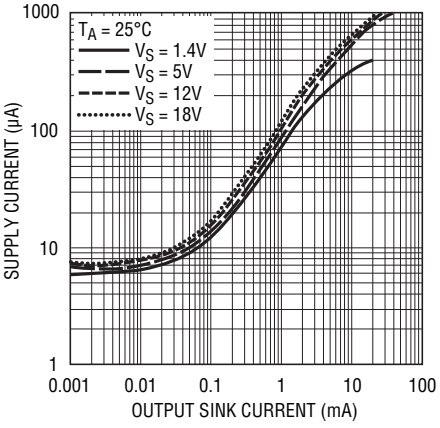

6700123 G14

Supply Current vs Output Sink Current

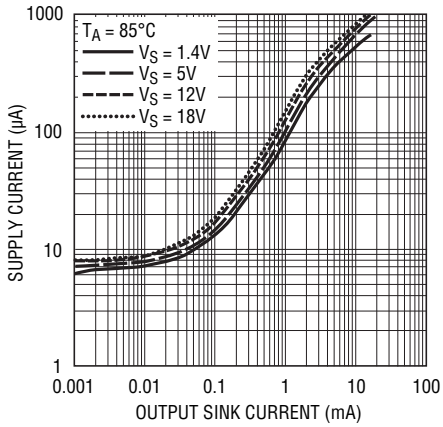

6700123 G15

Below Ground Input Bias Current

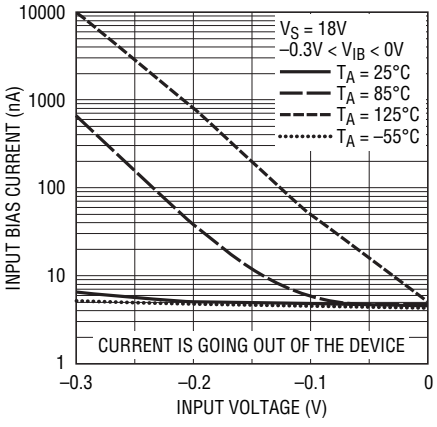

6700123 G16

Low Level Input Bias Current

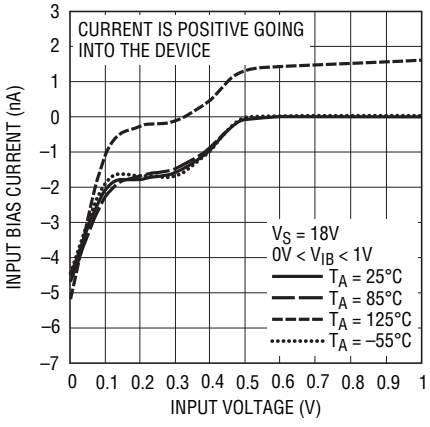

6700123 G17

High Level Input Bias Current

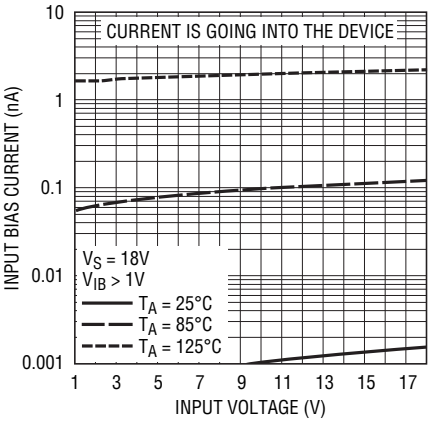

6700123 G18

TYPICAL PERFORMANCE CHARACTERISTICS

Output Saturation Voltage vs Output Sink Current

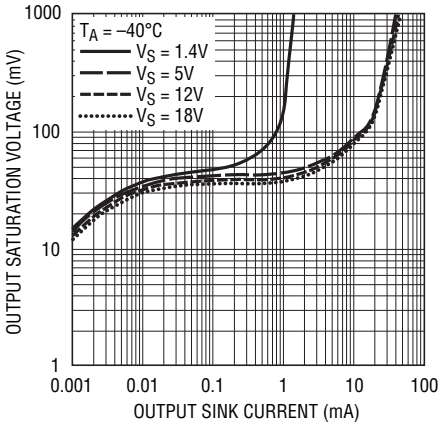

Output Saturation Voltage vs Output Sink Current

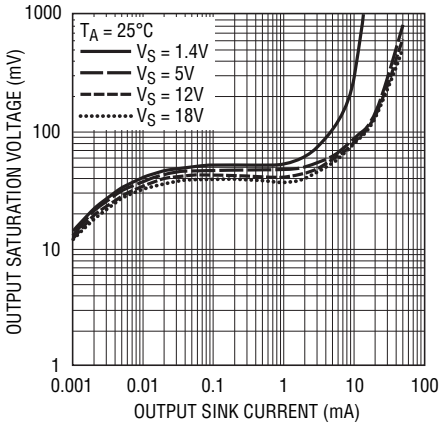

Output Saturation Voltage vs Output Sink Current

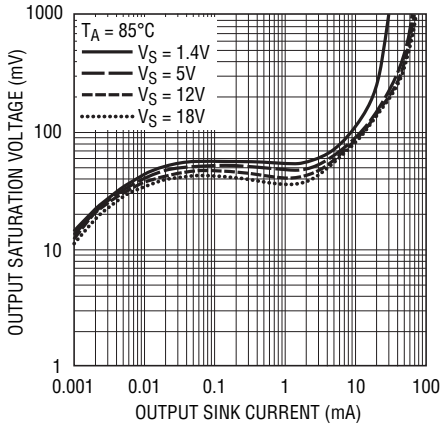

Output Short-Circuit Current

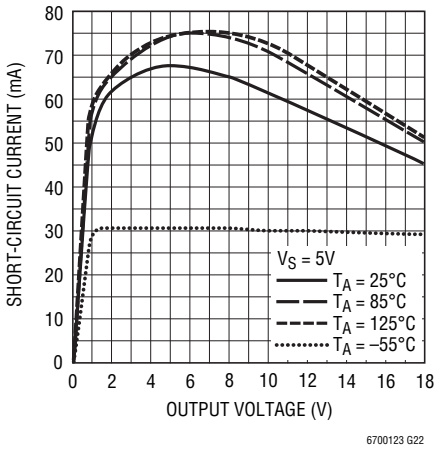

Output Short-Circuit Current

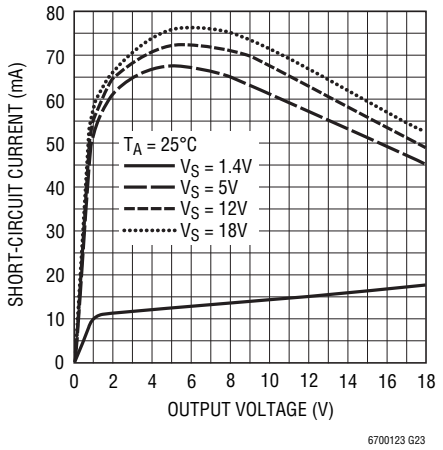

Output Leakage Current

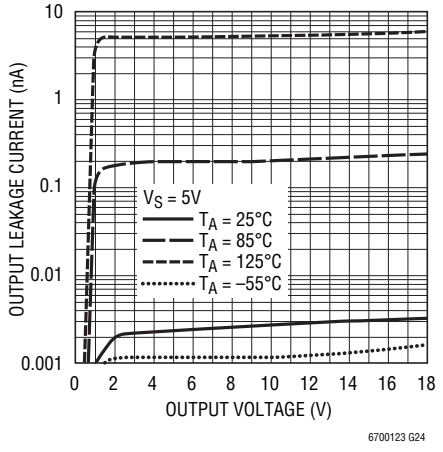

Propagation Delay vs Input Overdrive

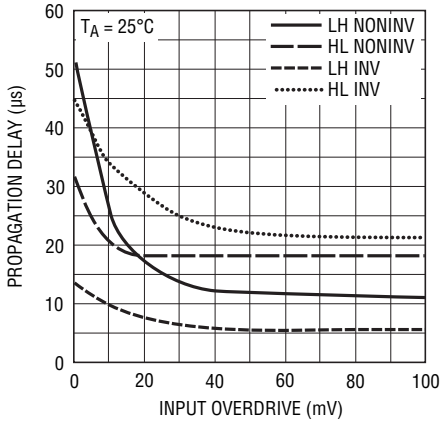

Rise and Fall Times vs Output Pull-Up Resistor

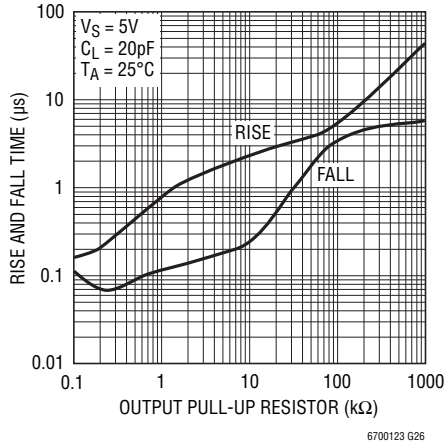

Noninverting and Inverting Comparator Propagation Delay

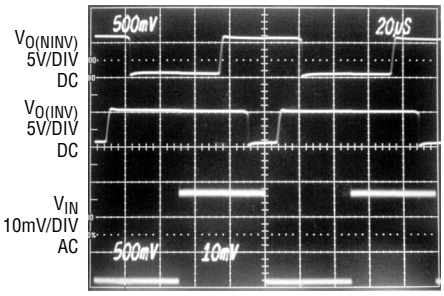

V_S = 15V 20µs/DIV
T_A = 25°C
R_{LOAD} = 10k CONNNECTED TO V_S
$V_{IN(OVERDRIVE)}$ = 10mV OVER THE INPUT VOLTAGE THRESHOLDS

APPLICATIONS INFORMATION

The LT6700-1/LT6700-2/LT6700-3/LT6700HV-1/LT6700HV-2/LT6700HV-3 devices are a family of dual micropower comparators with a built-in 400mV reference. Features include wide supply voltage range (1.4V to 18V), Over-The-Top input and output range, 2% accurate rising input threshold voltage and 6.5mV typical built-in hysteresis. The comparator's open-collector outputs can sink up to 40mA typical.

Internal Reference

Each of the comparator sections has one input available externally, with the three versions of the part differing by the polarity of those available inputs (i.e., inverting or noninverting). The other comparator inputs are connected internally to the 400mV reference. The rising input threshold voltage of the comparators is designed to be equal to that of the reference (i.e., ≈400mV). The reference voltage is established with respect to the device GND connection.

Hysteresis

Each comparator has built-in 6.5mV (typical) hysteresis to simplify designs, ensure stable operation in the presence of noise at the inputs, and to reject supply rail noise that might be induced by state change load transients. The hysteresis is designed such that the falling input threshold voltage is nominally 393.5mV. External positive feedback circuitry can be employed with noninverting comparator inputs to increase effective hysteresis if desired, but such circuitry will provide an apparent effect on both the rising and falling input thresholds (the actual internal thresholds remain unaffected).

Comparator Inputs

A comparator input can swing from ground to 18V (36V for LT6700HV), regardless of the supply voltage used. The typical input current for inputs well above threshold (i.e., >800mV) is a few pA leaking into an input. With decreasing input voltage, a small bias current begins to be drawn out of the input, reaching a few nA when at ground potential. The input may be forced 100mV below ground without causing an improper output, though some additional bias current will begin to flow from the parasitic ESD input protection diode. Inputs driven further negative than 100mV below ground will not cause comparator malfunction or damage (provided the current is limited to 10mA), but the accuracy of the reference cannot be guaranteed, in which case the output state of the alternate comparator may be affected.

Comparator Outputs

The comparator outputs are open collector and capable of sinking 40mA typical. Load currents are directed out the GND pin of the part. The output off-state voltage may range between –0.3V and 18V (36V for LT6700HV) with respect to ground, regardless of the supply voltage used. When the output high state bias voltage is above 18V, a 100k minimum pull-up resistor is required and total load capacitor must be less than 100nF. If the output high state is above 18V, caution must be taken to prevent a short from the output directly to the bias voltage, even if the output is in the off state. As with any open-collector device, the outputs may be tied together to implement wire-AND logic functions.

Power Supplies

The comparator family core circuitry operates from a single 1.4V to 18V supply. A minimum 0.1µF bypass capacitor is required between the V_S pin and GND. When an output load is connected to the supply rail near the part and the output is sinking more than 5mA, a 1µF bypass capacitor is recommended. The voltage reference built into the LT6700 can be susceptible to high noise on the supply line, particularly noise that is less than 50kHz and larger than $20mV_{P-P}$. In order to reduce the probability of a false comparator output in the presence of high supply noise, an RC filter should be used to reduce the noise. This filter can be created simply by adding a series R between the system supply and the LT6700 V_S pin, using the decoupling capacitor to create a lowpass response. It is recommended that the filter have a time constant:

$$t_{RC} > V_N/100$$

Where V_N is the peak-peak supply noise in millivolts and t_{RC} is milliseconds.

This filter will also increase the start-up time of the LT6700 by reducing the rate at which the supply can change. When

APPLICATIONS INFORMATION

using a supply filter, the start-up time of the LT6700 will increase to:

$$t_{START} = (0.17ms + 0.25 \bullet t_{RC}) \bullet \Delta V_S$$

Where t_{START} and t_{RC} are in milliseconds and ΔV_S is the change in supply in volts. The low supply current of the LT6700 should not cause significant voltage drop due to a 2k maximum series R.

Flexible Window Comparator

Using the LT6700-1/LT6700HV-1 as shown in the circuits of Figure 1, the wire-AND configuration permits high accuracy window functions to be implemented with a simple 3-resistor voltage divider network. The section A comparator provides the V_L trip-point and the section B comparator provides the V_H trip-point, with the built-in hysteresis providing about 1.7% recovery level at each trip point to prevent output chatter.

For designs that are to be optimized to detect *departure* from a window limit, the nominal resistor divider values are selected as follows (refer to the resistor designators shown on the first circuit of Figure 1):

$R1 \leq 400k$ (this sets the divider current >> I_B of inputs)

$R2 = R1 \bullet (0.98 \bullet V_H/V_L - 1)$

$R3 = R1 \bullet (2.5 \bullet V_H - 0.98 \bullet V_H/V_L)$

To create window functions optimized for detecting *entry* into a window (i.e., where the output is to indicate a "coming into spec" condition, as with the examples in Figure 1), the nominal resistor values are selected as follows:

$R1 \leq 400k$ (this sets the divider current >> I_B of inputs)

$R2 = R1 \bullet (1.02 \bullet V_H/V_L - 1)$

$R3 = R1 \bullet (2.54 \bullet V_H - 1.02 \bullet V_H/V_L)$

The worst-case variance of the trip-points is related to the specified threshold limits of the LT6700/LT6700HV device and the basic tolerance of divider resistors used. For resistor tolerance R_{TOL} (e.g. 0.01 for 1%), the worst-case trip-point voltage (either V_H or V_L) deviations can be predicted as follows (italicized values are taken from the data sheet, expressed in volts):

$$\text{Max dev } V_{TRIP\uparrow} = \pm V_{TRIPnom} \bullet \{2 \bullet R_{TOL} \bullet [(V_{TRIPnom} - 0.4) / V_{TRIPnom}] + 1.25 \bullet (V_{TH(R)max} - V_{TH(R)min})\}$$

$$\text{Max dev } V_{TRIP\downarrow} = \pm V_{TRIPnom} \bullet \{2 \bullet R_{TOL} \bullet [(V_{TRIPnom} - 0.39) / V_{TRIPnom}] + 1.27 \bullet (V_{TH(F)max} - V_{TH(F)min})\}$$

Generating an External Reference Signal

In some applications, it would be advantageous to have access to a signal that is directly related to the internal 400mV reference, even though the reference itself is not available externally. This can be accomplished to a reasonable degree by using an inverting comparator section as a "bang-bang" servo, establishing a nominal voltage, on an integration capacitor, that is scaled to the reference. This method is used in Figure 2, where the reference level has been doubled to drive a resistor bridge. The section B output cycles on and off to swing the section B input between its hysteresis trip points as the load capacitor

3.3V Supply Monitor

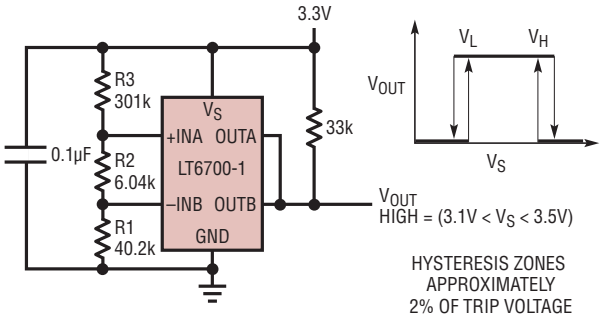

5V Supply Monitor

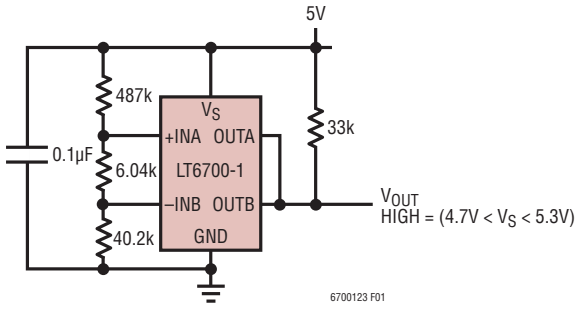

Figure 1. Simple Window Comparator

APPLICATIONS INFORMATION

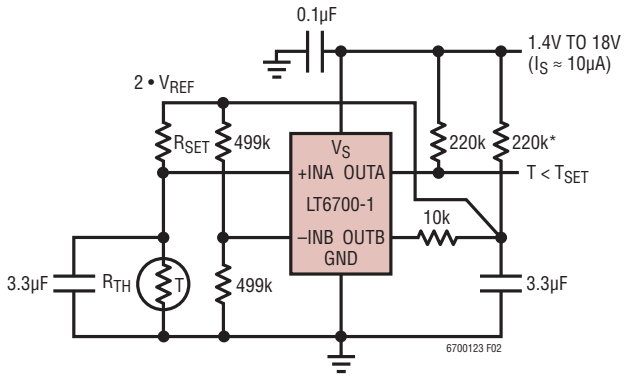

R_{TH} = 1M (e.g., YSI 44015, 1.00MΩ AT 25°C)
$R_{SET} = R_{TH}$ AT T_{SET}
*RESISTANCE MAY REQUIRE OPTIMIZATION FOR OPERATION OVER INTENDED R_{TH} AND V_{SUPPLY} RANGES
HYSTERESIS ZONE ≈0.4°C

Figure 2. Micropower Thermostat/Temperature Alarm

charges and discharges in a shallow, controlled fashion. The multiplied reference signal also contains ripple that is the hysteresis multiplied by the same factor, so additional filtering is performed at the sense node of the bridge to prevent comparator chatter in the section A comparator, which is performing the actual conditional decision for the circuit.

Instrumentation Grade Pulse Width Modulator (PWM)

Comparators with hysteresis are frequently employed to make simple oscillator structures, and the LT6700/LT6700HV lends itself nicely to forming a charge-balancing PWM function. The circuit shown in Figure 3 forms a PWM that is intended to transmit an isolated representation of a voltage difference, rather like an isolated instrumentation amplifier. The section B comparator is used to generate a 2V reference supply level for the CMOS NOT gate (inverter), which serves as the precision switch element for the charge balancer. The heart of the charge balancer is the section A comparator, which is detecting slight charge or discharge states on the 0.22µF "integration" capacitor as it remains balanced at ≈400mV by feedback through the NOT gate. The input sense voltage, V_{IN}, is converted to an imbalance current that the NOT gate duty cycle is continually correcting for, thus the digital waveform at the section A comparator output is a PWM representation of V_{IN} with respect to the 2V "full scale." In this particular circuit, the PWM information drives the LED of an opto-coupler, allowing the V_{IN} information to be coupled across a dielectric barrier. As an additional option to the circuit, the feedback loop can be broken and a second opto-coupler employed to provide the charge balance management. This configuration allows for clocking the comparator output (externally to this circuit) and providing synchronous feedback such that a simple ΔΣ voltage-to-frequency conversion can be formed if desired. Approximately 11-bit accuracy and noise performance was observed in a one second integration period for duty factors from 1% to 99%.

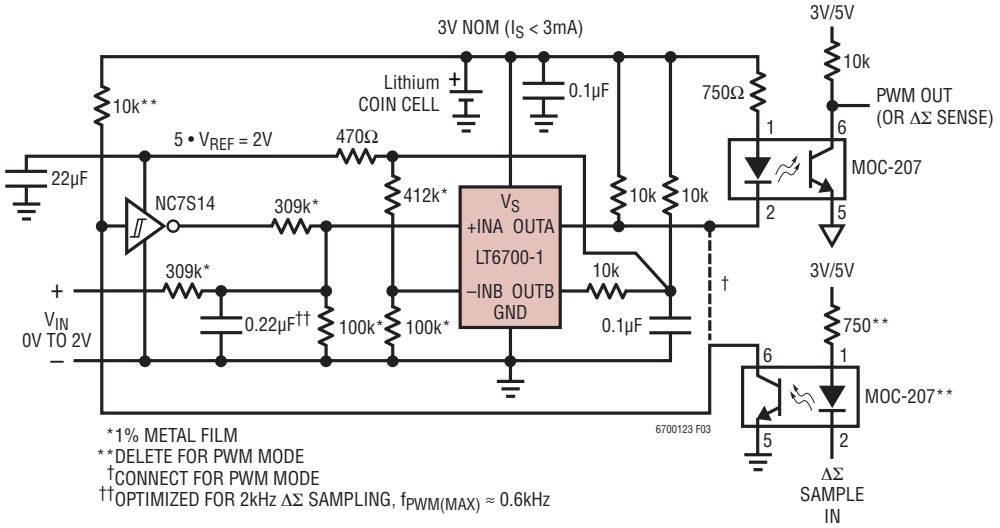

*1% METAL FILM
**DELETE FOR PWM MODE
†CONNECT FOR PWM MODE
††OPTIMIZED FOR 2kHz ΔΣ SAMPLING, $f_{PWM(MAX)}$ ≈ 0.6kHz

Figure 3. Isolated PWM or ΔΣ Converter

PACKAGE INFORMATION

DCB Package
6-Lead Plastic DFN (2mm × 3mm)
(Reference LTC DWG # 05-08-1715 Rev A)

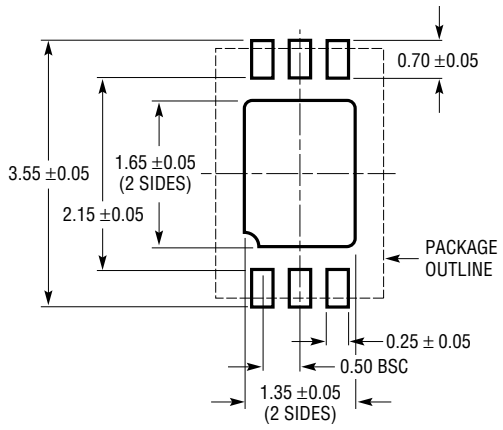

RECOMMENDED SOLDER PAD PITCH AND DIMENSIONS

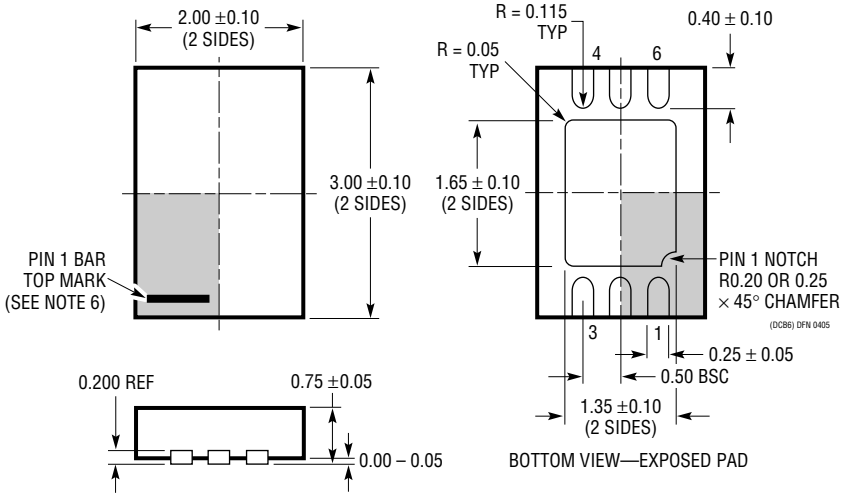

BOTTOM VIEW—EXPOSED PAD

NOTE:
1. DRAWING TO BE MADE A JEDEC PACKAGE OUTLINE M0-229 VARIATION OF (TBD)
2. DRAWING NOT TO SCALE
3. ALL DIMENSIONS ARE IN MILLIMETERS
4. DIMENSIONS OF EXPOSED PAD ON BOTTOM OF PACKAGE DO NOT INCLUDE MOLD FLASH. MOLD FLASH, IF PRESENT, SHALL NOT EXCEED 0.15mm ON ANY SIDE
5. EXPOSED PAD SHALL BE SOLDER PLATED
6. SHADED AREA IS ONLY A REFERENCE FOR PIN 1 LOCATION ON THE TOP AND BOTTOM OF PACKAGE

PACKAGE INFORMATION

S6 Package
6-Lead Plastic TSOT-23
(Reference LTC DWG # 05-08-1636)

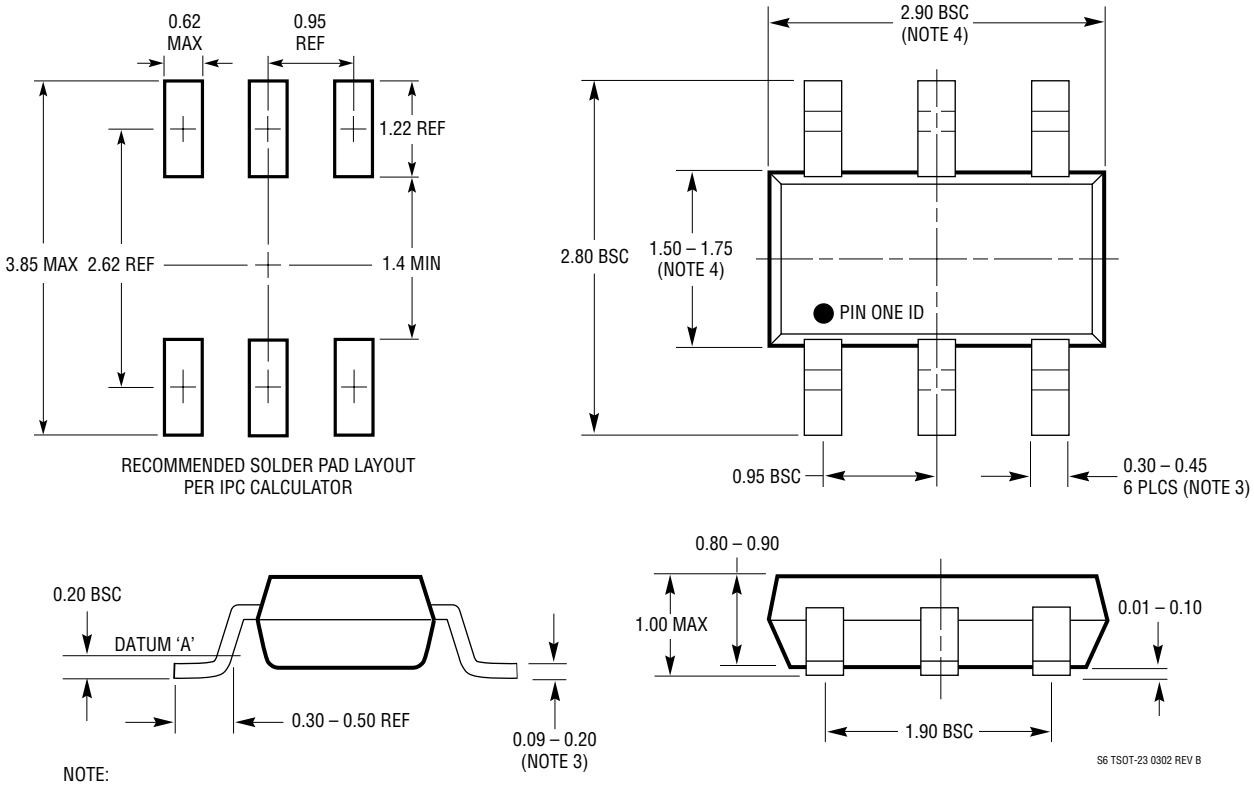

NOTE:
1. DIMENSIONS ARE IN MILLIMETERS
2. DRAWING NOT TO SCALE
3. DIMENSIONS ARE INCLUSIVE OF PLATING
4. DIMENSIONS ARE EXCLUSIVE OF MOLD FLASH AND METAL BURR
5. MOLD FLASH SHALL NOT EXCEED 0.254mm
6. JEDEC PACKAGE REFERENCE IS MO-193

REVISION HISTORY (Revision history begins at Rev G)

REV	DATE	DESCRIPTION	PAGE NUMBER
G	5/10	Power Supplies section updated	14
		Modified part number header for clarity	1 to 20
H	6/13	Web hyperlinks added	1-20
		Addition of MP grade in SOT23 package	2, 3

Information furnished by Linear Technology Corporation is believed to be accurate and reliable. However, no responsibility is assumed for its use. Linear Technology Corporation makes no representation that the interconnection of its circuits as described herein will not infringe on existing patent rights.

TYPICAL APPLICATIONS

PowerPath™ Controller

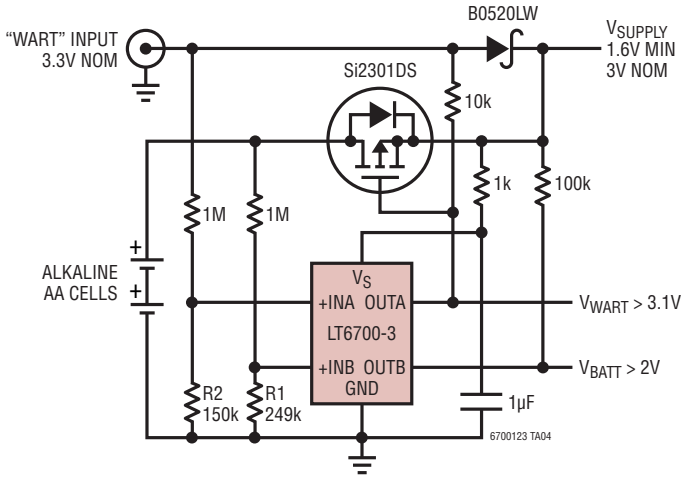

R1 = 400k/(V_{BATT} AT LOW – 0.4)
R2 = 400k/(V_{BATT} AT MAX – 0.4)
HYSTERESIS ZONES APPROXIMATELY 2% OF TRIP VOLTAGE
PowerPath IS A TRADEMARK OF LINEAR TECHNOLOGY CORPORATION

48V Status Monitor

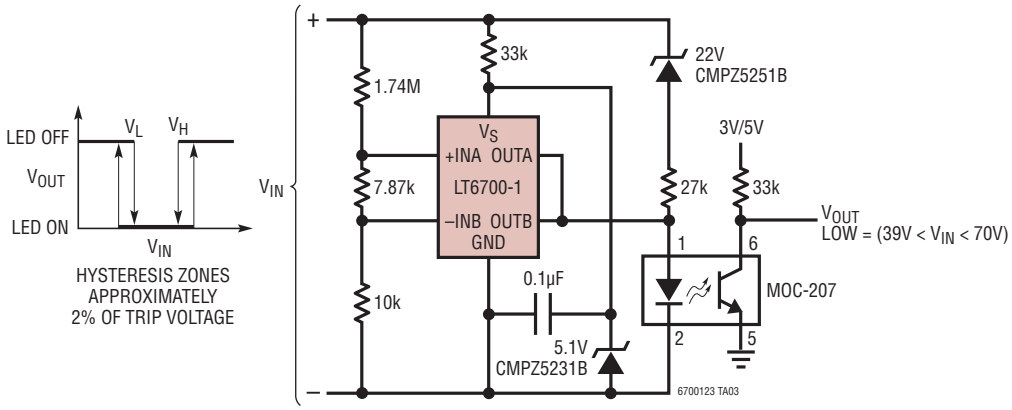

RELATED PARTS

PART NUMBER	DESCRIPTION	COMMENTS
LT1017/LT1018	Micropower Dual Comparator	1.1V (Min) Supply Voltage, ±1.4mV (Max) Input Offset
LTC1441/LTC1442	Micropower Dual Comparator with 1% Reference	1.182 ±1% Reference, ±10mV (Max) Input Offset
LTC1998	Micropower Comparator for Battery Monitoring	2.5µA Typ Supply Current, Adjustable Threshold and Hysteresis
LT6703	Micropower Comparator with 400mV Reference	1.4V to 18V Supply Current, 6.5µA Supply Current

Linear Technology Corporation
1630 McCarthy Blvd., Milpitas, CA 95035-7417
(408) 432-1900 • FAX: (408) 434-0507 • www.linear.com/LT6700
LT 0613 REV H • PRINTED IN USA
© LINEAR TECHNOLOGY CORPORATION 2003