# 620MHz – 1100MHz High Linearity Direct Quadrature Modulator

## FEATURES

- **Direct Conversion from Baseband to RF**
- **High Output: –4.2dB Conversion Gain**
- **High OIP3: 21.7dBm at 900MHz**
- **Low Output Noise Floor at 20MHz Offset:**
  **No RF: –159dBm/Hz**
  **$P_{OUT}$ = 4dBm: –153.3dBm/Hz**
- **Low Carrier Leakage: –42dBm at 900MHz**
- **High Image Rejection: –53dBc at 900MHz**
- **3-Ch CDMA2000 ACPR: –70.4dBc at 900MHz**
- **Integrated LO Buffer and LO Quadrature Phase Generator**
- **50Ω AC-Coupled Single-Ended LO and RF Ports**
- **High Impedance DC Interface to Baseband Inputs with 0.5V Common Mode Voltage**
- 16-Lead QFN 4mm × 4mm Package

## APPLICATIONS

- RFID Interrogators
- GSM, CDMA, CDMA2000 Transmitters
- Point-to-Point Wireless Infrastructure Tx
- Image Reject Up-Converters for Cellular Bands
- Low-Noise Variable Phase-Shifter for 620MHz to 1100MHz Local Oscillator Signals

## DESCRIPTION

The LT®5571 is a direct I/Q modulator designed for high performance wireless applications, including wireless infrastructure. It allows direct modulation of an RF signal using differential baseband I and Q signals. It supports RFID, GSM, EDGE, CDMA, CDMA2000, and other systems. It may also be configured as an image reject upconverting mixer by applying 90° phase-shifted signals to the I and Q inputs. The high impedance I/Q baseband inputs consist of voltage-to-current converters that in turn drive double-balanced mixers. The outputs of these mixers are summed and applied to an on-chip RF transformer, which converts the differential mixer signals to a 50Ω single-ended output. The four balanced I and Q baseband input ports are intended for DC-coupling from a source with a common-mode voltage at about 0.5V. The LO path consists of an LO buffer with single-ended input, and precision quadrature generators that produce the LO drive for the mixers. The supply voltage range is 4.5V to 5.25V.

LT, LT, LTC and LTM are registered trademarks of Linear Technology Corporation.
All other trademarks are the property of their respective owners.

## TYPICAL APPLICATION

**Direct Conversion Transmitter Application**

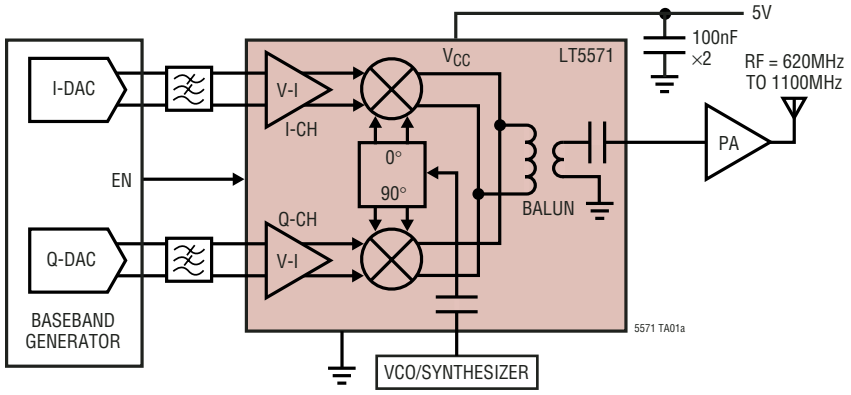


**CDMA2000 ACPR, AltCPR and Noise vs RF Output Power at 900MHz for 1 and 3 Carriers**

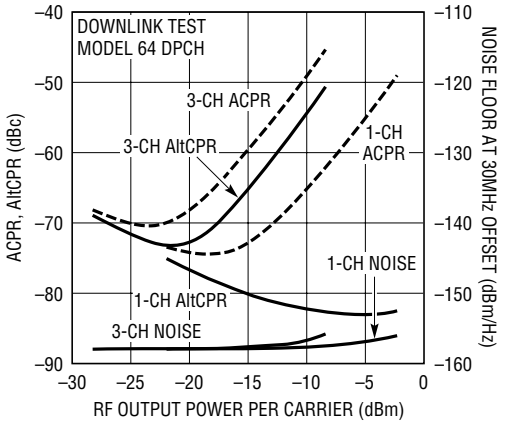

## ABSOLUTE MAXIMUM RATINGS

**(Note 1)**

Supply Voltage ..... 5.5V
Common-Mode Level of BBPI, BBMI and BBPQ, BBMQ ..... 0.6V
Operating Ambient Temperature (Note 2) ..... –40°C to 85°C
Storage Temperature Range ..... –65°C to 125°C
Voltage on any Pin Not to Exceed ..... –500mV to $V_{CC}$ + 500mV

Note: The baseband input pins should not be left floating.

## PACKAGE/ORDER INFORMATION

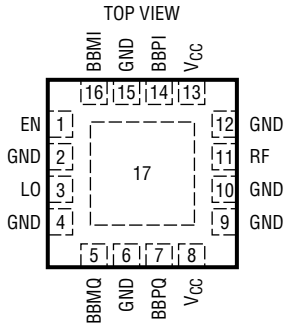


UF PACKAGE
16-LEAD (4mm × 4mm) PLASTIC QFN
$T_{JMAX}$ = 125°C, $\theta_{JA}$ = 37°C/W
EXPOSED PAD (PIN 17) IS GND, MUST BE SOLDERED TO PCB

| ORDER PART NUMBER | UF PART MARKING |
|---|---|
| LT5571EUF | 5571 |

**Order Options** Tape and Reel: Add #TR
Lead Free: Add #PBF Lead Free Tape and Reel: Add #TRPBF
Lead Free Part Marking: http://www.linear.com/leadfree/

Consult LTC Marketing for parts specified with wider operating temperature ranges.

## ELECTRICAL CHARACTERISTICS

**$V_{CC}$ = 5V, EN = High, $T_A$ = 25°C, $f_{LO}$ = 900MHz, $f_{RF}$ = 902MHz, $P_{LO}$ = 0dBm. BBPI, BBMI, BBPQ, BBMQ CM input voltage = 0.5$V_{DC}$, Baseband Input Frequency = 2MHz, I & Q 90° shifted (upper sideband selection). $P_{RF(OUT)}$ = –10dBm, unless otherwise noted. (Note 3)**

| SYMBOL | PARAMETER | CONDITIONS | MIN | TYP | MAX | UNITS |
|---|---|---|---|---|---|---|
| **RF Output (RF)** | | | | | | |
| $f_{RF}$ | RF Frequency Range<br>RF Frequency Range | –3dB Bandwidth<br>–1dB Bandwidth | | 0.62 to 1.1<br>0.65 to 1.04 | | GHz<br>GHz |
| $S_{22, ON}$ | RF Output Return Loss | EN = High (Note 6) | | 12.7 | | dB |
| $S_{22, OFF}$ | RF Output Return Loss | EN = Low (Note 6) | | 11.6 | | dB |
| NFloor | RF Output Noise Floor | No Input Signal (Note 8)<br>$P_{OUT}$ = 4dBm (Note 9)<br>$P_{OUT}$ = 4dBm (Note 10) | | –159<br>–153.3<br>–152.9 | | dBm/Hz<br>dBm/Hz<br>dBm/Hz |
| $G_V$ | Conversion Voltage Gain | 20 • Log ($V_{OUT, 50\Omega}/V_{IN, DIFF, I or Q}$) | | –4.2 | | dB |
| $P_{OUT}$ | Absolute Output Power | 1$V_{P-P\ DIFF}$ CW Signal, I and Q | | –0.2 | | dBm |
| $G_{3LO\ vs\ LO}$ | 3 • LO Conversion Gain Difference | (Note 17) | | –25.5 | | dB |
| OP1dB | Output 1dB Compression | (Note 7) | | 8.1 | | dBm |
| OIP2 | Output 2nd Order Intercept | (Notes 13, 14) | | 63.8 | | dBm |
| OIP3 | Output 3rd Order Intercept | (Notes 13, 15) | | 21.7 | | dBm |
| IR | Image Rejection | (Note 16) | | –53 | | dBc |
| LOFT | Carrier Leakage (LO Feedthrough) | EN = High, $P_{LO}$ = 0dBm (Note 16)<br>EN = Low, $P_{LO}$ = 0dBm (Note 16) | | –42<br>–61 | | dBm<br>dBm |

## ELECTRICAL CHARACTERISTICS

**$V_{CC}$ = 5V, EN = High, $T_A$ = 25°C, $f_{LO}$ = 900MHz, $f_{RF}$ = 902MHz, $P_{LO}$ = 0dBm. BBPI, BBMI, BBPQ, BBMQ CM input voltage = 0.5$V_{DC}$, Baseband Input Frequency = 2MHz, I & Q 90° shifted (upper sideband selection). $P_{RF(OUT)}$ = –10dBm, unless otherwise noted. (Note 3)**

| | | | | | | |
|---|---|---|---|---|---|---|
| **LO Input (LO)** | | | | | | |
| $f_{LO}$ | LO Frequency Range | | | 0.5 to 1.2 | | GHz |
| $P_{LO}$ | LO Input Power | | –10 | 0 | 5 | dBm |
| $S_{11, ON}$ | LO Input Return Loss | EN = High (Note 6) | | –10.9 | | dB |
| $S_{11, OFF}$ | LO Input Return Loss | EN = Low (Note 6) | | –2.6 | | dB |
| $NF_{LO}$ | LO Input Referred Noise Figure | at 900MHz (Note 5) | | 14.3 | | dB |
| $G_{LO}$ | LO to RF Small Signal Gain | at 900MHz (Note 5) | | 18.5 | | dB |
| $IIP3_{LO}$ | LO Input 3rd Order Intercept | at 900MHz (Note 5) | | –4.8 | | dBm |
| **Baseband Inputs (BBPI, BBMI, BBPQ, BBMQ)** | | | | | | |
| $BW_{BB}$ | Baseband Bandwidth | –3dB Bandwidth | | 400 | | MHz |
| $V_{CMBB}$ | DC Common-Mode Voltage | Externally Applied (Note 4) | | 0.5 | 0.6 | V |
| $R_{IN}$ | Differential Input Resistance | | | 90 | | kΩ |
| $I_{DC, IN}$ | Baseband Static Input Current | (Note 4) | | –24 | | µA |
| $P_{LO-BB}$ | Carrier Feedthrough on BB | No Baseband Signal (Note 4) | | –42 | | dBm |
| IP1dB | Input 1dB Compression Point | Differential Peak-to-Peak (Note 7) | | 2.9 | | $V_{P-P,DIFF}$ |
| $\Delta G_{I/Q}$ | I/Q Absolute Gain Imbalance | | | 0.013 | | dB |
| $\Delta\varphi_{I/Q}$ | I/Q Absolute Phase Imbalance | | | 0.24 | | Deg |
| **Power Supply ($V_{CC}$)** | | | | | | |
| $V_{CC}$ | Supply Voltage | | 4.5 | 5 | 5.25 | V |
| $I_{CC(ON)}$ | Supply Current | EN = High | | 97 | 120 | mA |
| $I_{CC(OFF)}$ | Supply Current, Shutdown Mode | EN = 0V | | | 100 | µA |
| $t_{ON}$ | Turn-On Time | EN = Low to High (Note 11) | | 0.4 | | µs |
| $t_{OFF}$ | Turn-Off Time | EN = High to Low (Note 12) | | 1.4 | | µs |
| **Enable (EN), Low = Off, High = On** | | | | | | |
| Enable | Input High Voltage<br>Input High Current | EN = High<br>EN = 5V | 1 | <br>230 | | V<br>µA |
| Shutdown | Input Low Voltage | EN = Low | | | 0.5 | V |

**Note 1:** Stresses beyond those listed under Absolute Maximum Ratings may cause permanent damage to the device. Exposure to any Absolute Maximum Rating condition for extended periods may affect device reliability and lifetime.

**Note 2:** Specifications over the –40°C to 85°C temperature range are assured by design, characterization and correlation with statistical process controls.

**Note 3:** Tests are performed as shown in the configuration of Figure 7.

**Note 4:** At each of the four baseband inputs BBPI, BBMI, BBPQ and BBMQ.

**Note 5:** V(BBPI) – V(BBMI) = 1$V_{DC}$, V(BBPQ) – V(BBMQ) = 1$V_{DC}$.

**Note 6:** Maximum value within –1dB bandwidth.

**Note 7:** An external coupling capacitor is used in the RF output line.

**Note 8:** At 20MHz offset from the LO signal frequency.

**Note 9:** At 20MHz offset from the CW signal frequency.

**Note 10:** At 5MHz offset from the CW signal frequency.

**Note 11:** RF power is within 10% of final value.

**Note 12:** RF power is at least 30dB lower than in the ON state.

**Note 13:** Baseband is driven by 2MHz and 2.1MHz tones. Drive level is set in such a way that the two resulting RF tones are –10dBm each.

**Note 14:** IM2 measured at LO frequency + 4.1MHz

**Note 15:** IM3 measured at LO frequency + 1.9MHz and LO frequency + 2.2MHz.

**Note 16:** Amplitude average of the characterization data set without image or LO feed-through nulling (unadjusted).

**Note 17:** The difference in conversion gain between the spurious signal at f = 3 • LO – BB versus the conversion gain at the desired signal at f = LO + BB for BB = 2MHz and LO = 900MHz.

## TYPICAL PERFORMANCE CHARACTERISTICS

**$V_{CC}$ = 5V, EN = High, $T_A$ = 25°C, $f_{LO}$ = 900MHz, $f_{RF}$ = 902MHz, $P_{LO}$ = 0dBm. BBPI, BBMI, BBPQ, BBMQ CM input voltage = 0.5$V_{DC}$, Baseband Input Frequency $f_{BB}$ = 2MHz, I & Q 90° shifted, without image or LO feedthrough nulling. $f_{RF}$ = $f_{BB}$ + $f_{LO}$ (upper sideband selection). $P_{RF(OUT)}$ = –10dBm (–10dBm/tone for 2-tone measurements), unless otherwise noted. (Note 3)**

### Supply Current vs Supply Voltage

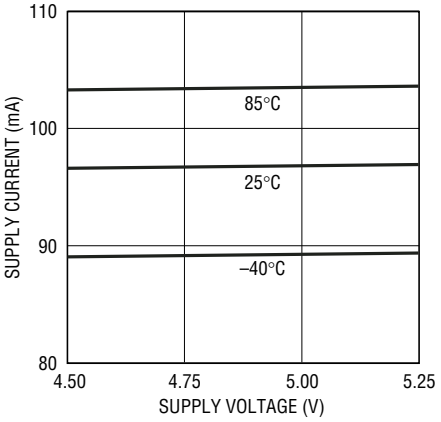


### RF Output Power vs LO Frequency at 1$V_{P-P}$ Differential Baseband Drive

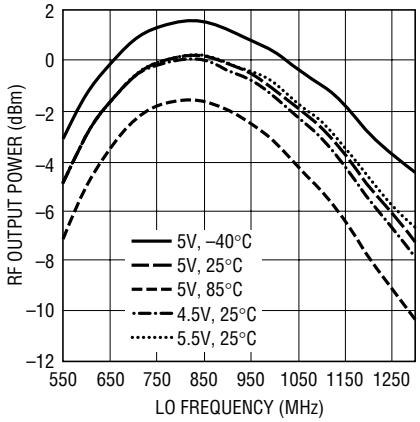


### Voltage Gain vs LO Frequency

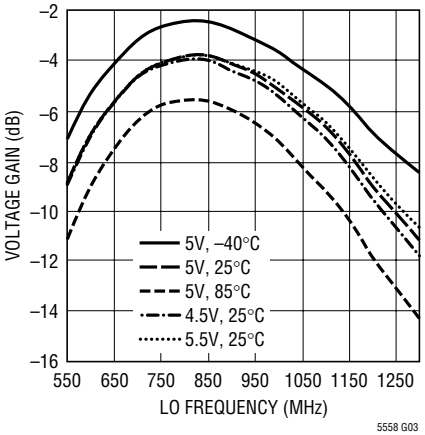


### Output IP3 vs LO Frequency

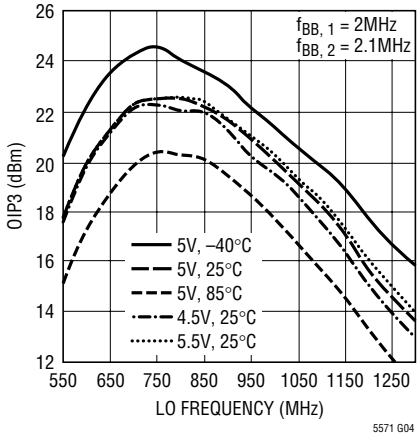


### Output IP2 vs LO Frequency

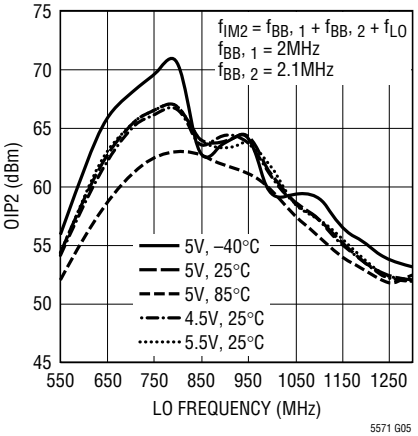


### Output 1dB Compression vs LO Frequency

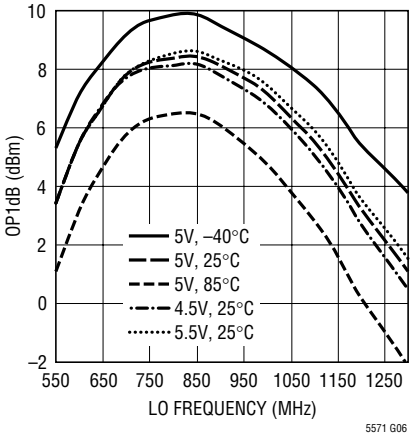


### LO Feedthrough to RF Output vs LO Frequency

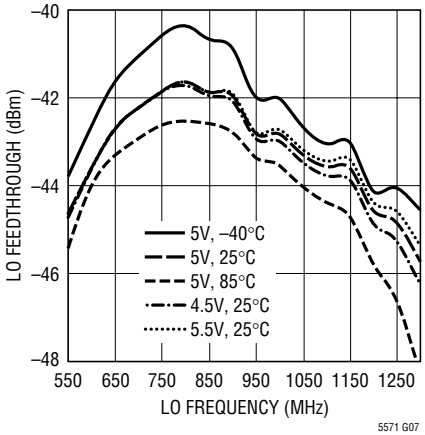


### 2 • LO Leakage to RF Output vs 2 • LO Frequency

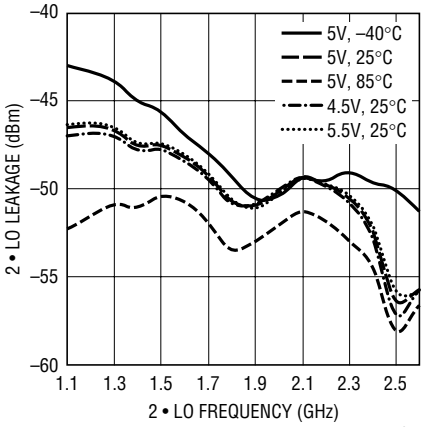


### 3 • LO Leakage to RF Output vs 3 • LO Frequency

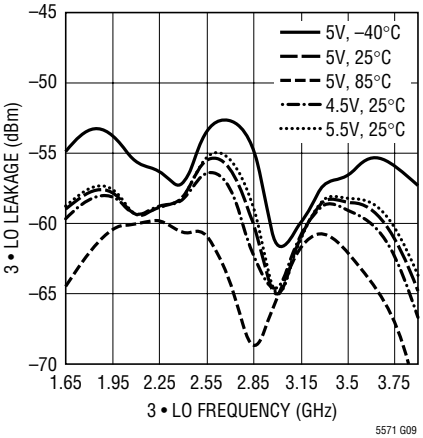

## TYPICAL PERFORMANCE CHARACTERISTICS

**$V_{CC}$ = 5V, EN = High, $T_A$ = 25°C, $f_{LO}$ = 900MHz, $f_{RF}$ = 902MHz, $P_{LO}$ = 0dBm. BBPI, BBMI, BBPQ, BBMQ CM input voltage = 0.5$V_{DC}$, Baseband Input Frequency $f_{BB}$ = 2MHz, I & Q 90° shifted, without image or LO feedthrough nulling. $f_{RF}$ = $f_{BB}$ + $f_{LO}$ (upper sideband selection). $P_{RF(OUT)}$ = –10dBm (–10dBm/tone for 2-tone measurements), unless otherwise noted. (Note 3)**

### Noise Floor vs RF Frequency

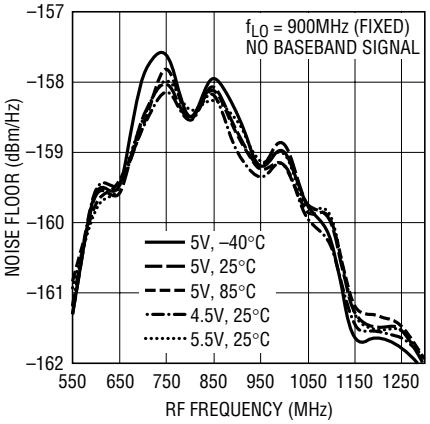


5571 G10

### Image Rejection vs LO Frequency

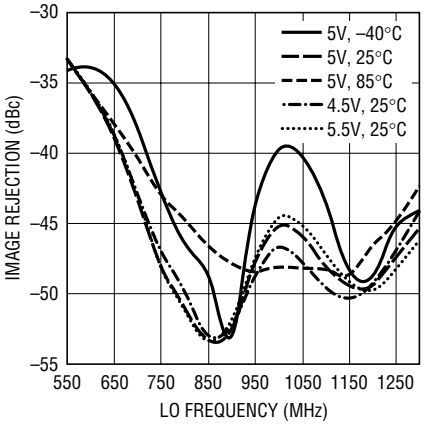


5571 G11

### LO and RF Port Return Loss vs Frequency

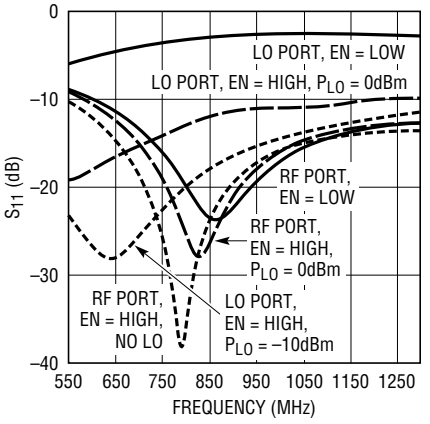


5571 G12

### Absolute I/Q Gain Imbalance vs LO Frequency

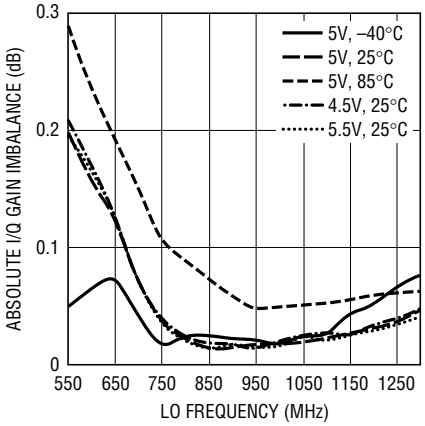


5571 G13

### Absolute I/Q Phase Imbalance vs LO Frequency

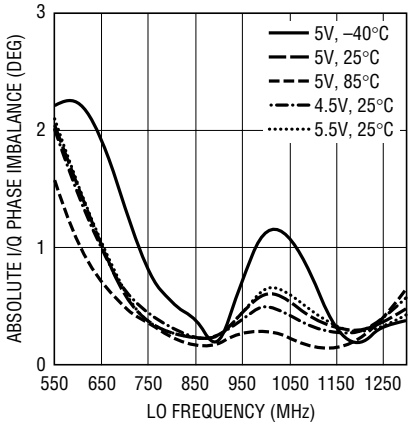


5571 G14

### Voltage Gain vs LO Power

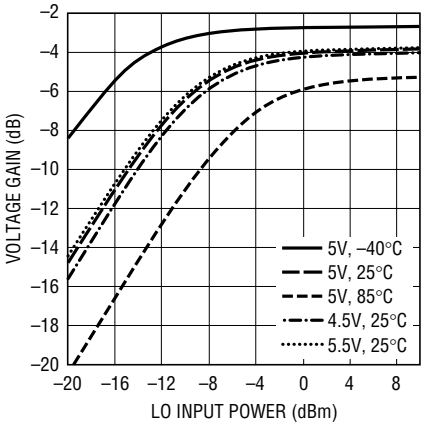


5571 G15

### Output IP3 vs LO Power

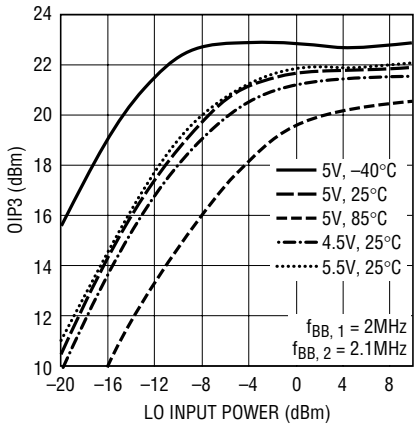


5571 G16

### LO Feedthrough vs LO Power

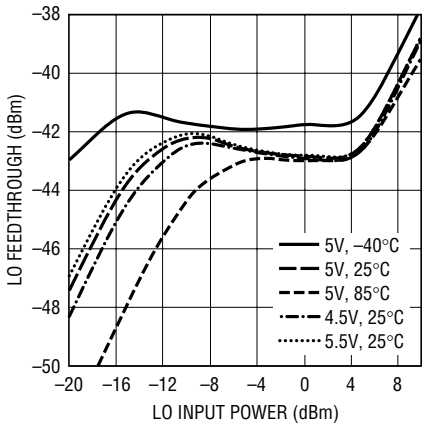


5571 G17

### Image Rejection vs LO Power

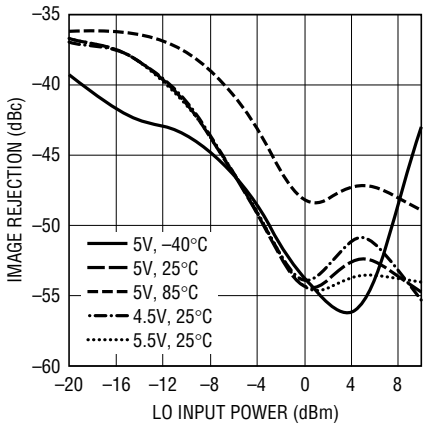


5571 G18

## TYPICAL PERFORMANCE CHARACTERISTICS

**$V_{CC}$ = 5V, EN = High, $T_A$ = 25°C, $f_{LO}$ = 900MHz, $f_{RF}$ = 902MHz, $P_{LO}$ = 0dBm. BBPI, BBMI, BBPQ, BBMQ CM input voltage = 0.5$V_{DC}$, Baseband Input Frequency $f_{BB}$ = 2MHz, I & Q 90° shifted, without image or LO feedthrough nulling. $f_{RF} = f_{BB} + f_{LO}$ (upper sideband selection). $P_{RF(OUT)}$ = –10dBm (–10dBm/tone for 2-tone measurements), unless otherwise noted. (Note 3)**

### RF CW Output Power, HD2 and HD3 vs CW Baseband Voltage and Temperature

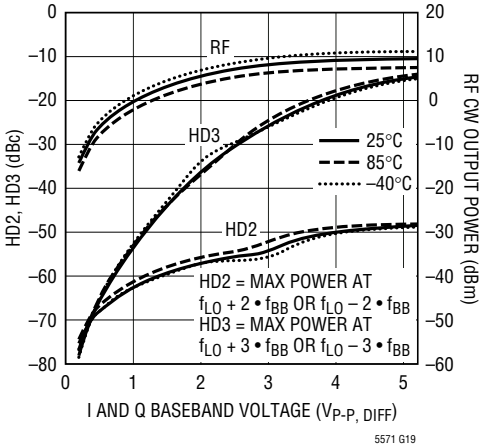


### RF CW Output Power, HD2 and HD3 vs CW Baseband Voltage and Supply Voltage

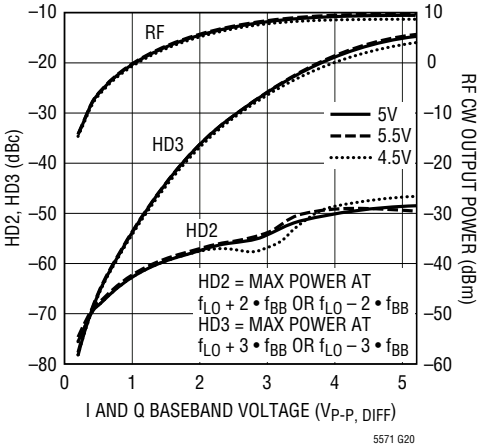


### LO Feedthrough to RF Output vs CW Baseband Voltage

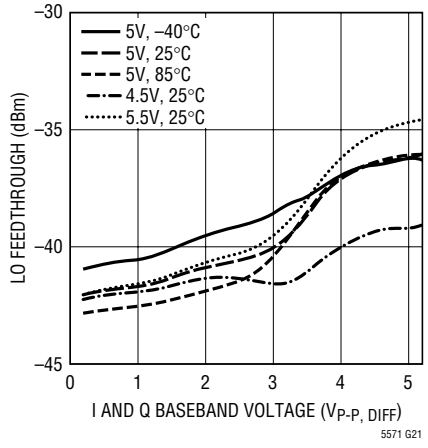


### Image Rejection vs CW Baseband Voltage

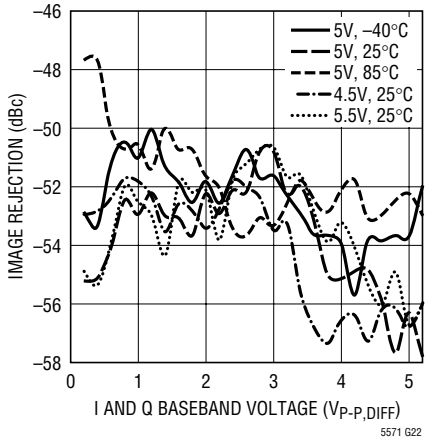


### RF Two-Tone Power (Each Tone), IM2 and IM3 vs Baseband Voltage and Temperature

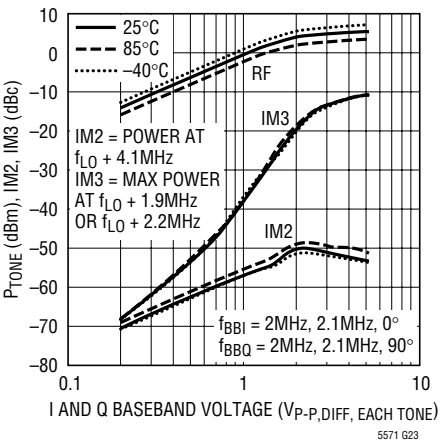


### RF Two-Tone Power (Each Tone), IM2 and IM3 vs Baseband Voltage and Supply Voltage

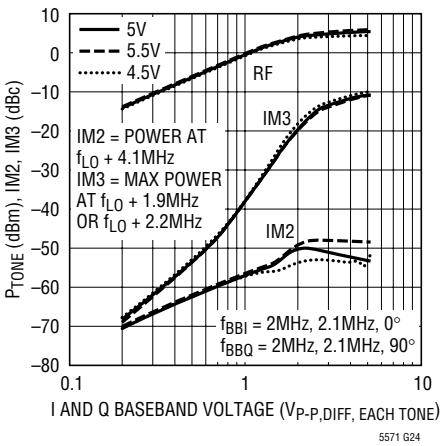


### Voltage Gain Distribution

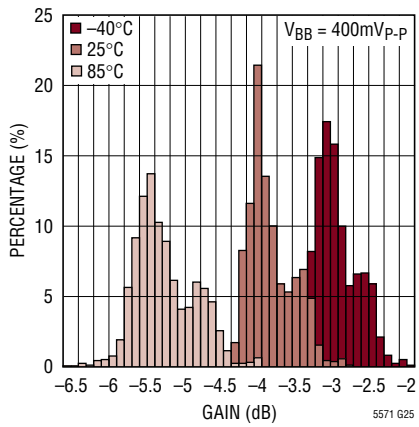


### Noise Floor Distribution (no RF)

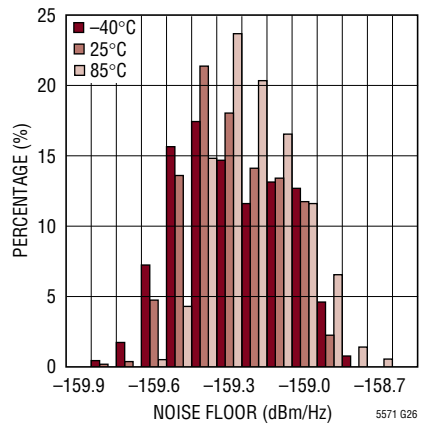


### LO Leakage Distribution

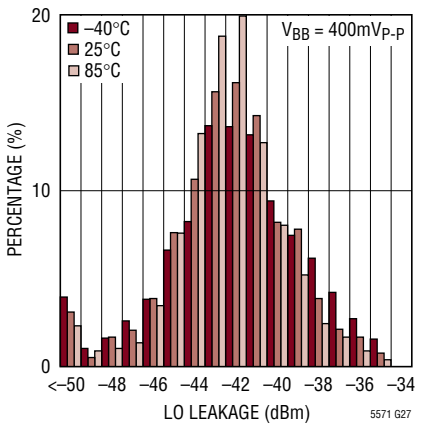

## TYPICAL PERFORMANCE CHARACTERISTICS

**$V_{CC}$ = 5V, EN = High, $T_A$ = 25°C, $f_{LO}$ = 900MHz, $f_{RF}$ = 902MHz, $P_{LO}$ = 0dBm. BBPI, BBMI, BBPQ, BBMQ CM input voltage = 0.5$V_{DC}$, Baseband Input Frequency $f_{BB}$ = 2MHz, I & Q 90° shifted, without image or LO feedthrough nulling. $f_{RF} = f_{BB} + f_{LO}$ (upper sideband selection). $P_{RF(OUT)}$ = –10dBm (–10dBm/tone for 2-tone measurements), unless otherwise noted. (Note 3)**

**Image Rejection Distribution**

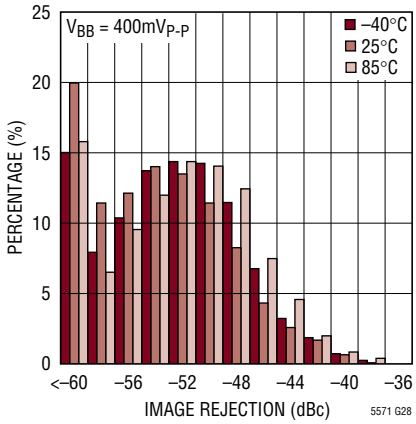


**LO Feedthrough and Image Rejection vs Temperature After Calibration at 25°C**

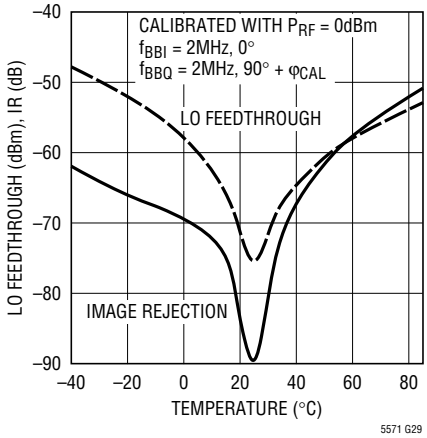


## PIN FUNCTIONS

**EN (Pin 1):** Enable Input. When the Enable pin voltage is higher than 1V, the IC is turned on. When the Enable voltage is less than 0.5V or if the pin is disconnected, the IC is turned off. The voltage on the Enable pin should never exceed $V_{CC}$ by more than 0.5V, in order to avoid possible damage to the chip.

**GND (Pins 2, 4, 6, 9, 10, 12, 15, 17):** Ground. Pins 6, 9, 15 and the Exposed Pad 17 are connected to each other internally. Pins 2 and 4 are connected to each other internally and function as the ground return for the LO signal. Pins 10 and 12 are connected to each other internally and function as the ground return for the on-chip RF balun. For best RF performance, Pins 2, 4, 6, 9, 10, 12, 15 and the Exposed Pad, Pin 17, should be connected to the printed circuit board ground plane.

**LO (Pin 3):** LO Input. The LO input is an AC-coupled single-ended input with approximately 50Ω input impedance at RF frequencies. Externally applied DC voltage should be within the range –0.5V to ($V_{CC}$ + 0.5V) in order to avoid turning on ESD protection diodes.

**BBPQ, BBMQ (Pins 7, 5):** Baseband inputs for the Q-channel with about 90kΩ differential input impedance. These pins should be externally biased at about 0.5V. Applied common mode voltage must stay below 0.6V.

**$V_{CC}$ (Pins 8, 13):** Power Supply. Pins 8 and 13 are connected to each other internally. 0.1µF capacitors are recommended for decoupling to ground on each of these pins.

**RF (Pin 11):** RF Output. The RF output is an AC-coupled single-ended output with approximately 50Ω output impedance at RF frequencies. Externally applied DC voltage should be within the range –0.5V to ($V_{CC}$ + 0.5V) in order to avoid turning on ESD protection diodes.

**BBPI, BBMI (Pins 14, 16):** Baseband inputs for the I-channel with about 90kΩ differential input impedance. These pins should be externally biased at about 0.5V. Applied common mode voltage must stay below 0.6V.

**Exposed Pad (Pin 17):** Ground. The Exposed Pad must be soldered to the PCB.

## BLOCK DIAGRAM

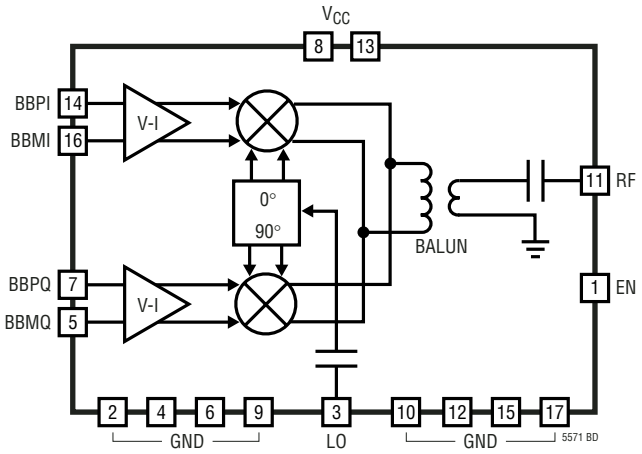


## APPLICATIONS INFORMATION

The LT5571 consists of I and Q input differential voltage-to-current converters, I and Q up-conversion mixers, an RF signal combiner/balun, an LO quadrature phase generator and LO buffers.

External I and Q baseband signals are applied to the differential baseband input pins, BBPI, BBMI, and BBPQ, BBMQ. These voltage signals are converted to currents and translated to RF frequency by means of double-balanced up-converting mixers. The mixer outputs are combined in an RF output balun, which also transforms the output impedance to 50Ω. The center frequency of the resulting RF signal is equal to the LO signal frequency. The LO input drives a phase shifter which splits the LO signal into in-phase and quadrature LO signals. These LO signals are then applied to on-chip buffers which drive the up-conversion mixers. Both the LO input and RF output are single-ended, 50Ω-matched and AC-coupled.

### Baseband Interface

The baseband inputs (BBPI, BBMI), (BBPQ, BBMQ) present a differential input impedance of about 90kΩ. At each of the four baseband inputs, a capacitor of 1.8pF to ground and a PNP emitter follower is incorporated (see Figure 1), which limits the baseband bandwidth to approximately 200MHz (–1dB point), if driven by a 50Ω source. The circuit is optimized for a common mode voltage of 0.5V which should be externally applied. The baseband input pins should not be left floating because the internal PNP's base current will pull the common mode voltage higher than the 0.6V limit. This condition may damage the part. The PNP's base current is about 24µA in normal operation. On the LT5571 demo board, external 50Ω resistors to ground are added to each baseband input to prevent this condition and to serve as a termination resistance for the baseband connections.

It is recommended that the I/Q signals be DC-coupled to the LT5571. An applied common mode voltage level at the I and Q inputs of about 0.5V will maximize the LT5571's dynamic range. Some I/Q generators allow setting the common mode voltage independently. For a 0.5V common mode voltage setting, the common-mode voltage of those generators must be set to 0.5V to create the desired 0.5V bias, when an external 50Ω is present in the setup (See Figure 2).

The part should be driven differentially; otherwise, the even-order distortion products will degrade the overall linearity severely. Typically, a DAC will be the signal source for the LT5571. A reconstruction filter should be placed between the DAC output and the LT5571's baseband inputs.

In Figure 3 a typical baseband interface is shown, including a fifth-order low-pass ladder filter. For each baseband pin, a 0 to 1V swing is developed corresponding to a DAC output current of 0mA to 20mA. The maximum sinusoidal single side-band RF output power is about +5.8dBm for

## APPLICATIONS INFORMATION

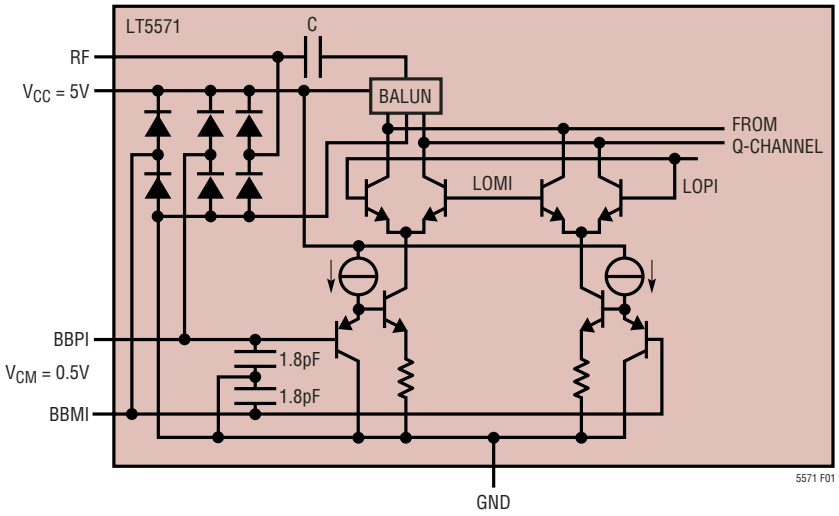


**Figure 1. Simplified Circuit Schematic of the LT5571 (Only I-Half is Drawn)**

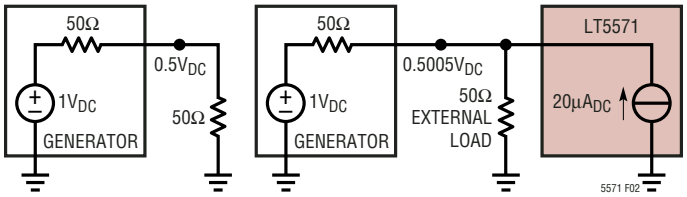


**Figure 2. DC Voltage Levels for a Generator Programmed at $0.5V_{DC}$ for a 50Ω Load Without and with the LT5571 as a Load**

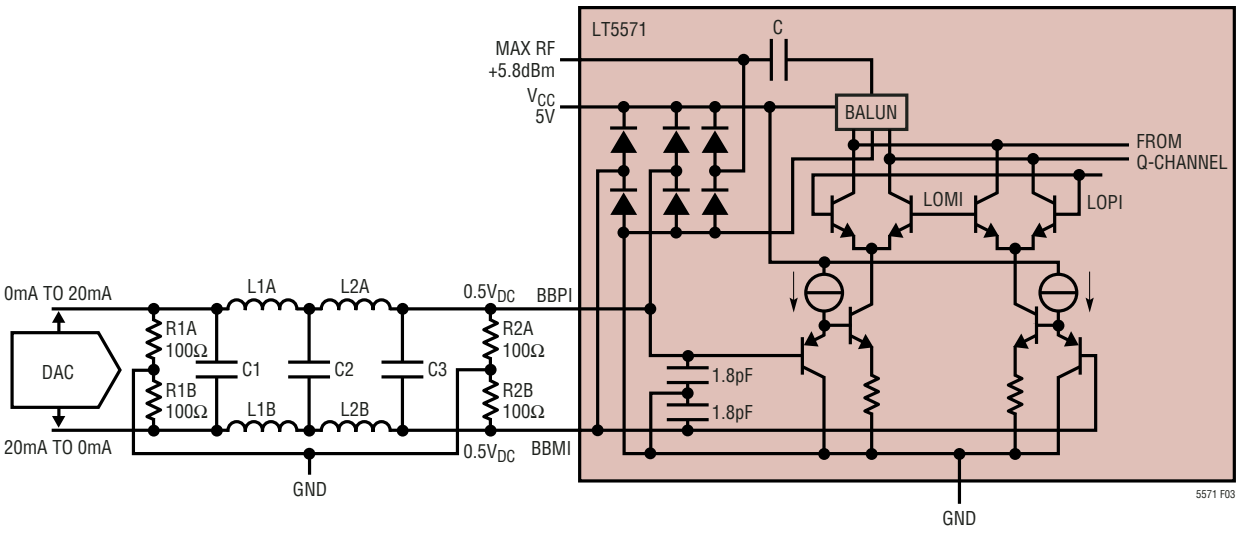


**Figure 3. LT5571 Baseband Interface with 5th Order Filter and $0.5V_{CM}$ DAC (Only I Channel is Shown)**

## APPLICATIONS INFORMATION

**Table 1. Typical Performance Characteristics vs $V_{CM}$ for $f_{LO}$ = 900MHz, $P_{LO}$ = 0dBm**

| $V_{CM}$ (V) | $I_{CC}$ (mA) | $G_V$ (dB) | OP1dB (dBm) | OIP2 (dBm) | OIP3 (dBm) | NFloor (dBm/Hz) | LOFT (dBm) | IR (dBc) |
|---|---|---|---|---|---|---|---|---|
| 0.1 | 55.3 | –4.5 | –1.5 | 53.4 | 9.2 | –163.6 | –53.6 | 37.0 |
| 0.2 | 65.3 | –3.9 | 2.0 | 51.7 | 11.2 | –161.8 | –50.3 | 40.4 |
| 0.25 | 70.3 | –3.7 | 3.4 | 51.9 | 13.3 | –161.2 | –49.0 | 43.5 |
| 0.3 | 75.7 | –3.6 | 4.5 | 52.1 | 15.6 | –160.5 | –47.7 | 43.9 |
| 0.4 | 86.4 | –3.5 | 6.3 | 53.1 | 18.7 | –159.6 | –45.3 | 45.1 |
| 0.5 | 97.1 | –3.6 | 7.9 | 53.0 | 20.6 | –158.7 | –43.1 | 45.4 |
| 0.6 | 108.1 | –3.7 | 8.4 | 53.7 | 22.1 | –157.9 | –41.2 | 45.6 |

full 0V to 1V swing on each baseband input ($2V_{P-P,DIFF}$). This maximum RF output level is limited by the $0.5V_{PEAK}$ maximum baseband swing possible for a $0.5V_{DC}$ common-mode voltage level (assuming no negative supply bias voltage is available).

It is possible to bias the LT5571 to a common mode voltage level other than 0.5V. Table 1 shows the typical performance for different common mode voltages.

### LO Section

The internal LO input amplifier performs single-ended to differential conversion of the LO input signal. Figure 4 shows the equivalent circuit schematic of the LO input.

The internal differential LO signal is split into in-phase and quadrature (90° phase shifted) signals to drive LO buffer sections. These buffers drive the double balanced I and Q mixers. The phase relationship between the LO input and the internal in-phase LO and quadrature LO signals is fixed, and is independent of start-up conditions. The phase shifters are designed to deliver accurate quadrature signals for an LO frequency near 900MHz. For frequencies significantly below 750MHz or above 1100MHz, the quadrature accuracy will diminish, causing the image rejection to degrade. The LO pin input impedance is about

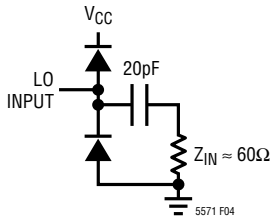


**Figure 4. Equivalent Circuit Schematic of the LO Input**

50Ω, and the recommended LO input power window is –2dBm to 2dBm. For $P_{LO}$ < –2dBm input power, the gain, OIP2, OIP3, dynamic-range (in dBc/Hz) and image rejection will degrade, especially at $T_A$ = 85°C.

Harmonics present on the LO signal can degrade the image rejection, because they introduce a small excess phase shift in the internal phase splitter. For the second (at 1.8GHz) and third harmonics (at 2.7GHz) at –20dBc level, the introduced signal at the image frequency is about –61dBc or lower, corresponding to an excess phase shift much less than 1 degree. For the second and third harmonics at –10dBc, still the introduced signal at the image frequency is about –51dBc. Higher harmonics than the third will have less impact. The LO return loss typically will be better than 11dB over the 750MHz to 1GHz range. Table 2 shows the LO port input impedance vs frequency.

**Table 2. LO Port Input Impedance vs Frequency for EN = High and $P_{LO}$ = 0dBm**

| FREQUENCY (MHz) | INPUT IMPEDANCE (Ω) | $S_{11}$ | |
|---|---|---|---|
| | | Mag | Angle |
| 500 | 47.2 + j11.7 | 0.123 | 97 |
| 600 | 58.4 + j8.3 | 0.108 | 40 |
| 700 | 65.0 – j0.6 | 0.131 | –2 |
| 800 | 66.1 – j12.2 | 0.173 | –31 |
| 900 | 60.7 – j22.5 | 0.221 | –53 |
| 1000 | 53.3 – j25.1 | 0.239 | –69 |
| 1100 | 48.4 – j25.1 | 0.248 | –79 |
| 1200 | 42.7 – j26.4 | 0.285 | –89 |

The return loss $S_{11}$ on the LO port can be improved at lower frequencies by adding a shunt capacitor. The input impedance of the LO port is different if the part is in shut-down mode. The LO input impedance for EN = Low is given in Table 3.

## APPLICATIONS INFORMATION

**Table 3. LO Port Input Impedance vs Frequency for EN = Low and $P_{LO}$ = 0dBm**

| FREQUENCY (MHz) | INPUT IMPEDANCE (Ω) | $S_{11}$ | |
|---|---|---|---|
| | | Mag | Angle |
| 500 | 35.6 + j42.1 | 0.467 | 83 |
| 600 | 65.5 + j70.1 | 0.531 | 46 |
| 700 | 163 + j76.3 | 0.602 | 14 |
| 800 | 188 – j95.2 | 0.654 | –13 |
| 900 | 72.9 – j114 | 0.692 | –36 |
| 1000 | 34.3 – j83.5 | 0.715 | –56 |
| 1100 | 21.6 – j63.3 | 0.726 | –73 |
| 1200 | 16.4 – j50.5 | 0.727 | –86 |

### RF Section

After up-conversion, the RF outputs of the I and Q mixers are combined. An on-chip balun performs internal differential to single-ended output conversion, while transforming the output signal impedance to 50Ω. Table 4 shows the RF port output impedance vs frequency.

**Table 4. RF Port Output Impedance vs Frequency for EN = High and $P_{LO}$ = 0dBm**

| FREQUENCY (MHz) | OUTPUT IMPEDANCE (Ω) | $S_{22}$ | |
|---|---|---|---|
| | | Mag | Angle |
| 500 | 22.2 + j5.2 | 0.390 | 165 |
| 600 | 28.4 + j11.7 | 0.311 | 143 |
| 700 | 38.8 + j14.3 | 0.202 | 119 |
| 800 | 49.4 + j6.8 | 0.068 | 91 |
| 900 | 49.4 – j5.8 | 0.058 | –92 |
| 1000 | 42.7 – j11.7 | 0.149 | –115 |
| 1100 | 36.9 – j12.6 | 0.207 | –128 |
| 1200 | 33.2 – j11.3 | 0.241 | –138 |

The RF output $S_{22}$ with no LO power applied is given in Table 5.

**Table 5. RF Port Output Impedance vs Frequency for EN = High and No LO Power Applied**

| FREQUENCY (MHz) | OUTPUT IMPEDANCE (Ω) | $S_{22}$ | |
|---|---|---|---|
| | | Mag | Angle |
| 500 | 22.9 + j5.3 | 0.377 | 165 |
| 600 | 30.0 + j11.2 | 0.283 | 143 |
| 700 | 40.6 + j11.2 | 0.160 | 123 |
| 800 | 47.3 + j1.9 | 0.034 | 145 |
| 900 | 44.2 – j7.4 | 0.099 | –123 |
| 1000 | 38.4 – j10.4 | 0.175 | –131 |
| 1100 | 34.2 – j10.2 | 0.221 | –140 |
| 1200 | 31.7 – j8.7 | 0.246 | –148 |

For EN = Low the $S_{22}$ is given in Table 6.

**Table 6. RF Port Output Impedance vs Frequency for EN = Low**

| FREQUENCY (MHz) | OUTPUT IMPEDANCE (Ω) | $S_{22}$ | |
|---|---|---|---|
| | | Mag | Angle |
| 500 | 21.5 + j5.0 | 0.403 | 166 |
| 600 | 26.9 + j11.8 | 0.333 | 144 |
| 700 | 36.5 + j16.0 | 0.239 | 120 |
| 800 | 48.8 + j11.2 | 0.113 | 89 |
| 900 | 52.8 – j2.2 | 0.035 | –38 |
| 1000 | 46.6 – j11.5 | 0.123 | –99 |
| 1100 | 39.7 – j13.9 | 0.191 | –117 |
| 1200 | 35.0 – j13.0 | 0.232 | –130 |

To improve $S_{22}$ for lower frequencies, a series capacitor can be added to the RF output. At higher frequencies, a shunt inductor can improve the $S_{22}$. Figure 5 shows the equivalent circuit schematic of the RF output.

Note that an ESD diode is connected internally from the RF output to ground. For strong output RF signal levels (higher than 3dBm) this ESD diode can degrade the linearity performance if an external 50Ω termination impedance is connected directly to ground. To prevent this, a coupling capacitor can be inserted in the RF output line. This is strongly recommended during 1dB compression measurements.

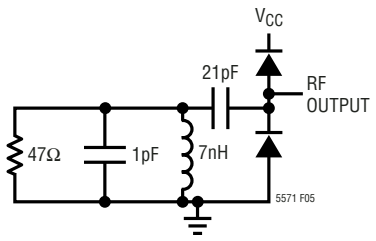


**Figure 5. Equivalent Circuit Schematic of the RF Output**

### Enable Interface

Figure 6 shows a simplified schematic of the EN pin interface. The voltage necessary to turn on the LT5571 is 1V. To disable (shut down) the chip, the enable voltage must be below 0.5V. If the EN pin is not connected, the chip is disabled. This EN = Low condition is guaranteed by the 75kΩ on-chip pull-down resistor.

It is important that the voltage at the EN pin does not exceed $V_{CC}$ by more than 0.5V. If this should occur, the

## APPLICATIONS INFORMATION

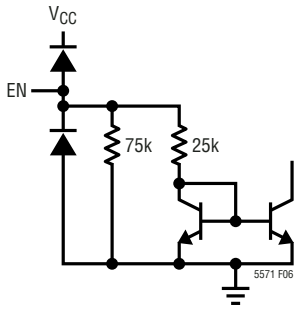


**Figure 6. EN Pin Interface**

full chip supply current could be sourced through the EN pin ESD protection diodes, which are not designed for this purpose. Damage to the chip may result.

### Evaluation Board

Figure 7 shows the evaluation board schematic. A good ground connection is required for the LT5571's Exposed Pad. If this is not done properly, the RF performance will degrade. Additionally, the Exposed Pad provides heat sinking for the part and minimizes the possibility of the chip overheating. R1 (optional) limits the EN pin current in the event that the EN pin is pulled high while the $V_{CC}$ inputs are low. The application board PCB layouts are shown in Figures 8 and 9.

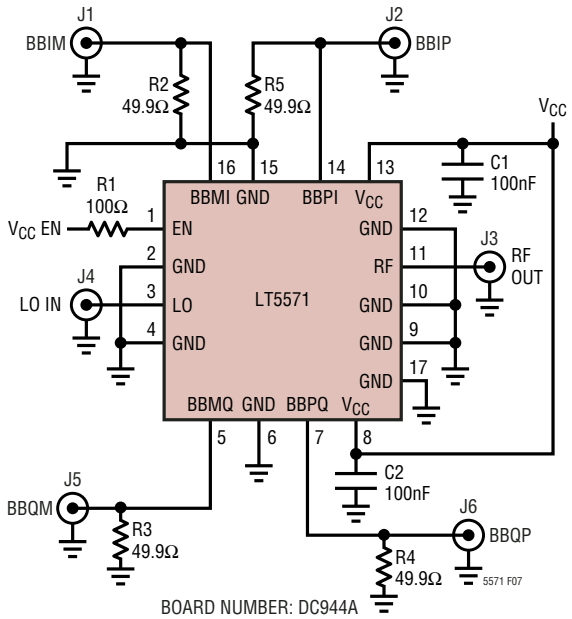


**Figure 7. Evaluation Circuit Schematic**

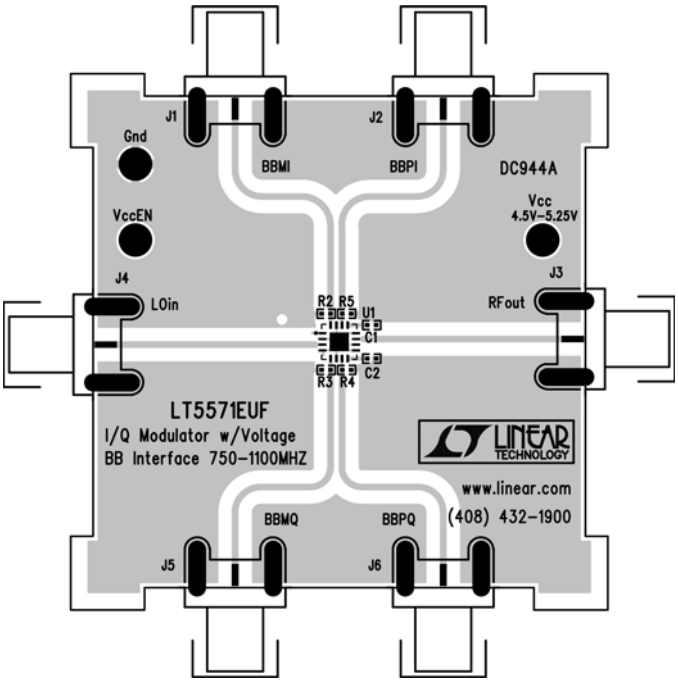


**Figure 8. Component Side of Evaluation Board**

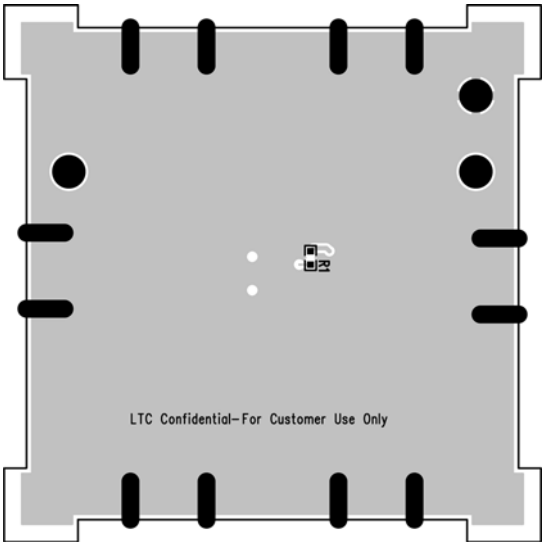


**Figure 9. Bottom Side of Evaluation Board**

# APPLICATIONS INFORMATION

## Application Measurements

The LT5571 is recommended for base-station applications using various modulation formats. Figure 10 shows a typical application.

Figure 11 shows the ACPR performance for CDMA2000 using one and three channel modulation. Figures 12 and 13 illustrate the 1- and 3-channel CDMA2000 measurement. To calculate ACPR, a correction is made for the spectrum analyzer's noise floor (Application Note 99).

If the output power is high, the ACPR will be limited by the linearity performance of the part. If the output power is low, the ACPR will be limited by the noise performance of the part. In the middle, an optimum ACPR is obtained.

Because of the LT5571's very high dynamic-range, the test equipment can limit the accuracy of the ACPR measurement. Consult Design Note 375 or the factory for advice on ACPR measurement if needed.

The ACPR performance is sensitive to the amplitude mismatch of the BBIP and BBIM (or BBQP and BBQM) input voltage. This is because a difference in AC voltage amplitude will give rise to a difference in amplitude between the even-order harmonic products generated in the internal V-I converter. As a result, they will not cancel out entirely. Therefore, it is important to keep the amplitudes at the BBIP and BBIM (or BBQP and BBQM) as equal as possible.

LO feedthrough and image rejection performance may be improved by means of a calibration procedure. LO feedthrough is minimized by adjusting the differential DC offsets at the I and the Q baseband inputs. Image rejection can be improved by adjusting the amplitude and phase difference between the I and the Q baseband inputs. The LO feedthrough and Image Rejection can also change as a function of the baseband drive level, as depicted in Figure 14.

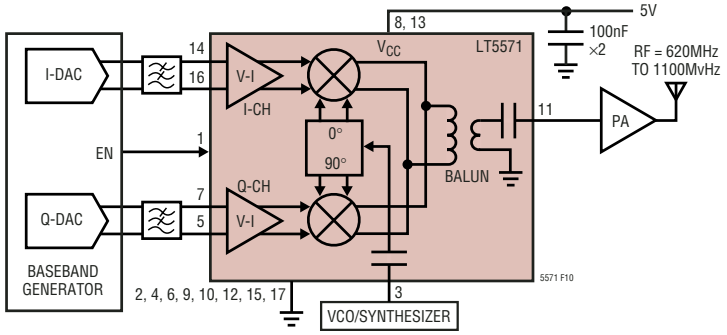


**Figure 10. 620MHz to 1.1GHz Direct Conversion Transmitter Application**

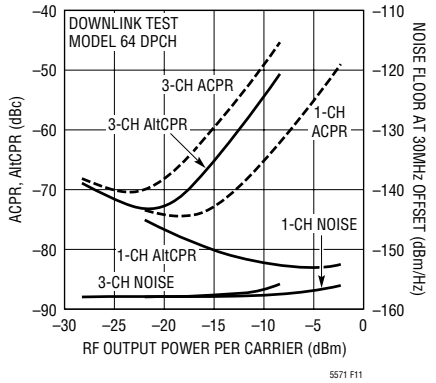


**Figure 11. CDMA2000 ACPR, ALTCPR and Noise vs RF Output Power at 900MHz for 1 and 3 Carriers**

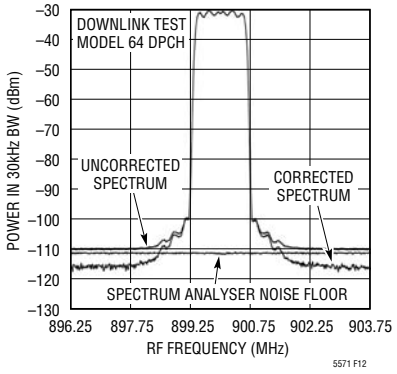


**Figure 12. 1-Channel CDMA2000 Spectrum**

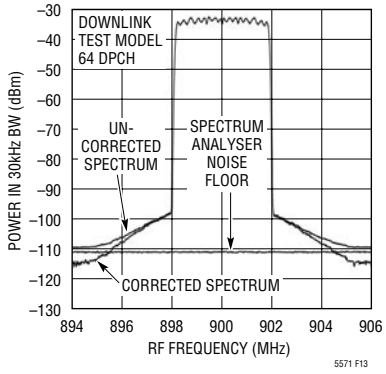


**Figure 13. 3-Channel CDMA2000 Spectrum**

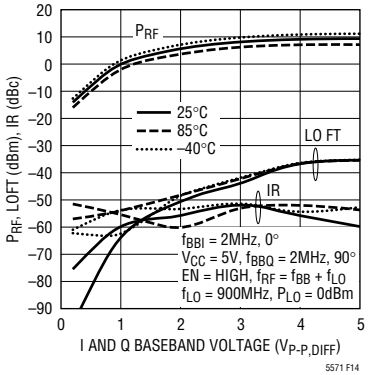


**Figure 14. Image Rejection and LO Feed-Through vs Baseband Drive Voltage After Calibration at 25°C**

## APPLICATIONS INFORMATION

### Example: RFID Application

Figure 15 shows the interface between a current drive DAC and the LT5571 for RFID applications. The SSB-ASK mode requires an I/Q modulator to generate the desired spectrum. According to [1], the LT5571 is capable of meeting the "Dense-Interrogator" requirements with reduced supply current. A $V_{CM}$ = 0.25V was chosen in order to save 30mA current, resulting in a modulator supply current of about 73mA. This is achieved by sourcing 5mA$_{DC}$ average DAC current into 50Ω resistors R1A and R1B. As anti-aliasing filter, an RCRC filter was chosen using R1A, R1B, C1A, C1B, R2A, R2B, C2A and C2B. This results in a second-order passive low-pass filter with –3dB cutoff at 790kHz. This filter cutoff is chosen high enough that it will not affect the RFID baseband signals in the fastest mode (TARI = 6.25µs, see [1]) significantly, and at the same time achieving enough alias attenuation while using a 32MHz sampling frequency. The resulting Alt80-CPR (the alias frequency at 897.875MHz falls outside the RF frequency range of Figure 16a) is –92dBc for TARI = 6.25µs. The SSB-ASK output signal spectrum is plotted in Figure 16a, together with the Dense-Interrogator Transmit mask [1] for TARI = 25µs. The corresponding envelope representation is given in Figure 16b. The Alt1-CPR can be increased by using a higher $V_{CM}$ at the cost of extra supply current or a lower baseband drive at the cost of lower RF output power. The center frequency of the channel is chosen at 865.9MHz ("channel 2"), while the LO frequency is chosen at 865.875MHz.

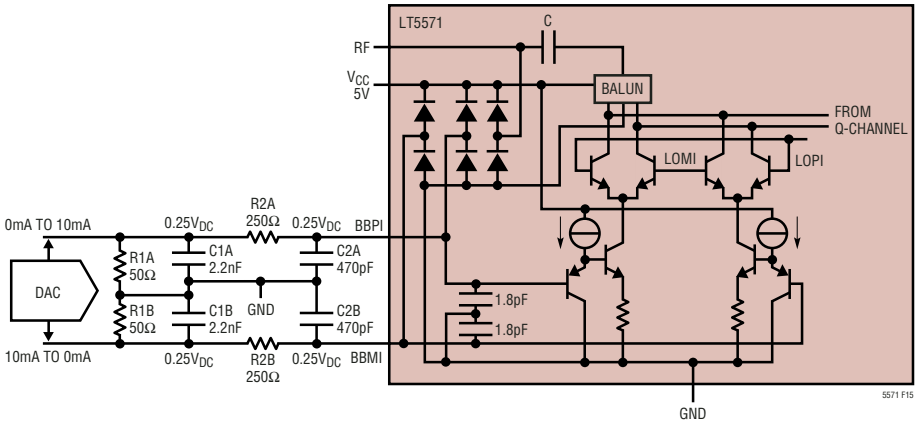


**Figure 15. Recommended Baseband Interface for RFID Applications (Only I Channel is Drawn)**

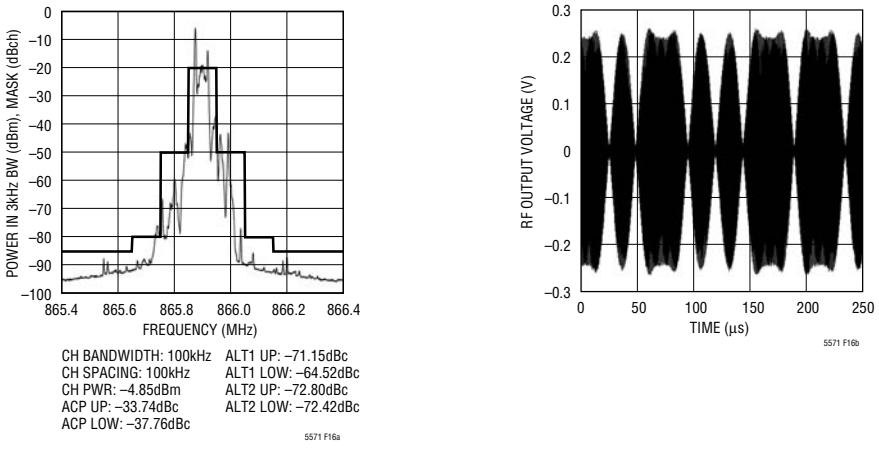


**Figure 16a and 16b. RFID SSB-ASK Spectrum with Mask and Corresponding RF Envelope for TARI = 25µs**

[1] EPC Radio Frequency Identity Protocols, Class-1 Generation-2 UHF RFID Protocol for Communications at 860MHz – 960MHz, version 1.0.9.

# PACKAGE DESCRIPTION

**UF Package**
**16-Lead Plastic QFN (4mm × 4mm)**
(Reference LTC DWG # 05-08-1692)

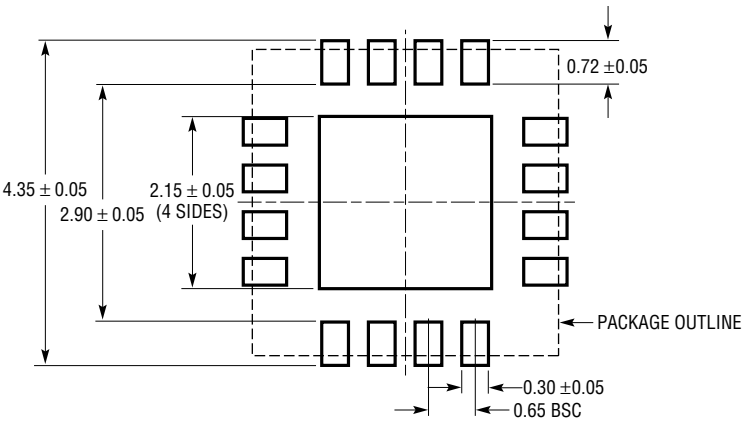


RECOMMENDED SOLDER PAD PITCH AND DIMENSIONS

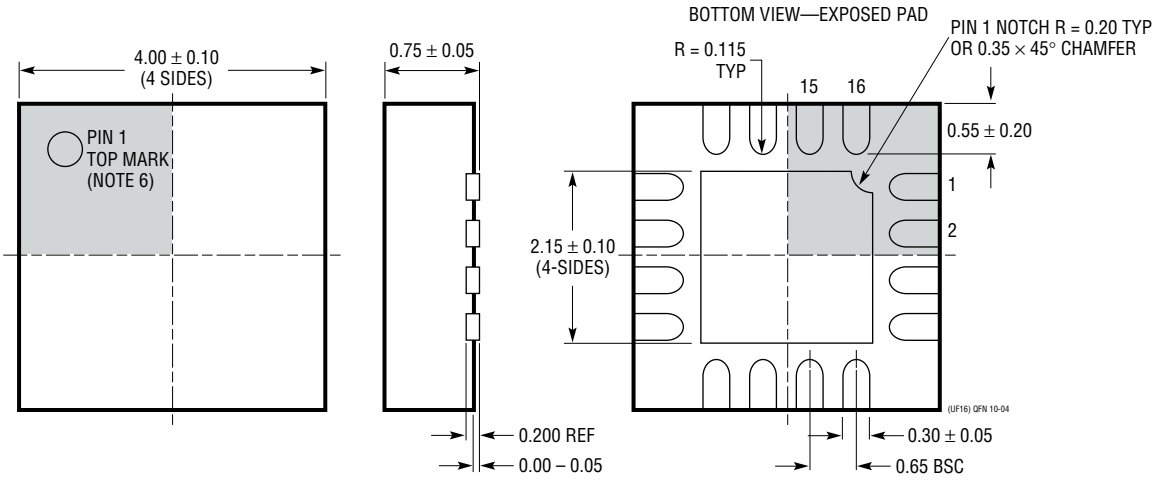


NOTE:
1. DRAWING CONFORMS TO JEDEC PACKAGE OUTLINE MO-220 VARIATION (WGGC)
2. DRAWING NOT TO SCALE
3. ALL DIMENSIONS ARE IN MILLIMETERS
4. DIMENSIONS OF EXPOSED PAD ON BOTTOM OF PACKAGE DO NOT INCLUDE MOLD FLASH. MOLD FLASH, IF PRESENT, SHALL NOT EXCEED 0.15mm ON ANY SIDE
5. EXPOSED PAD SHALL BE SOLDER PLATED
6. SHADED AREA IS ONLY A REFERENCE FOR PIN 1 LOCATION ON THE TOP AND BOTTOM OF PACKAGE



Information furnished by Linear Technology Corporation is believed to be accurate and reliable. However, no responsibility is assumed for its use. Linear Technology Corporation makes no representation that the interconnection of its circuits as described herein will not infringe on existing patent rights.

## RELATED PARTS

| PART NUMBER | DESCRIPTION | COMMENTS |
|---|---|---|
| **Infrastructure** | | |
| LT5514 | Ultralow Distortion, IF Amplifier/ADC Driver with Digitally Controlled Gain | 850MHz Bandwidth, 47dBm OIP3 at 100MHz, 10.5dB to 33dB Gain Control Range |
| LT5515 | 1.5GHz to 2.5GHz Direct Conversion Quadrature Demodulator | 20dBm IIP3, Integrated LO Quadrature Generator |
| LT5516 | 0.8GHz to 1.5GHz Direct Conversion Quadrature Demodulator | 21.5dBm IIP3, Integrated LO Quadrature Generator |
| LT5517 | 40MHz to 900MHz Quadrature Demodulator | 21dBm IIP3, Integrated LO Quadrature Generator |
| LT5518 | 1.5GHz to 2.4GHz High Linearity Direct Quadrature Modulator | 22.8dBm OIP3 at 2GHz, –158.2dBm/Hz Noise Floor, 50Ω Single-Ended RF and LO Ports, 4-Channel W-CDMA ACPR = –64dBc at 2.14GHz |
| LT5519 | 0.7GHz to 1.4GHz High Linearity Upconverting Mixer | 17.1dBm IIP3 at 1GHz, Integrated RF Output Transformer with 50Ω Matching, Single-Ended LO and RF Ports Operation |
| LT5520 | 1.3GHz to 2.3GHz High Linearity Upconverting Mixer | 15.9dBm IIP3 at 1.9GHz, Integrated RF Output Transformer with 50Ω Matching, Single-Ended LO and RF Ports Operation |
| LT5521 | 10MHz to 3700MHz High Linearity Upconverting Mixer | 24.2dBm IIP3 at 1.95GHz, NF = 12.5dB, 3.15V to 5.25V Supply, Single-Ended LO Port Operation |
| LT5522 | 600MHz to 2.7GHz High Signal Level Downconverting Mixer | 4.5V to 5.25V Supply, 25dBm IIP3 at 900MHz, NF = 12.5dB, 50Ω Single-Ended RF and LO Ports |
| LT5524 | Low Power, Low Distortion ADC Driver with Digitally Programmable Gain | 450MHz Bandwidth, 40dBm OIP3, 4.5dB to 27dB Gain Control |
| LT5525 | High Linearity, Low Power Downconverting Mixer | Single-Ended 50Ω RF and LO Ports, 17.6dBm IIP3 at 1900MHz, $I_{CC}$ = 28mA |
| LT5526 | High Linearity, Low Power Downconverting Mixer | 3V to 5.3V Supply, 16.5dBm IIP3, 100kHz to 2GHz RF, NF = 11dB, $I_{CC}$ = 28mA, –65dBm LO-RF Leakage |
| LT5527 | 400MHz to 3.7GHz High Signal Level Downconverting Mixer | IIP3 = 23.5dBm and NF = 12.5dBm at 1900MHz, 4.5V to 5.25V Supply, $I_{CC}$ = 78mA, Conversion Gain = 2dB. |
| LT5528 | 1.5GHz to 2.4GHz High Linearity Direct Quadrature Modulator | 21.8dBm OIP3 at 2GHz, –159.3dBm/Hz Noise Floor, 50Ω, 0.5$V_{DC}$ Baseband Interface, 4-Channel W-CDMA ACPR = –66dBc at 2.14GHz |
| LT5558 | 600MHz to 1100MHz High Linearity Direct Quadrature Modulator | 22.4dBm OIP3 at 900MHz, –158dBm/Hz Noise Floor, 3kΩ, 2.1$V_{DC}$ Baseband Interface, 3-Ch CDMA2000 ACPR = –70.4dBc at 900MHz |
| LT5560 | Ultra-Low Power Active Mixer | 10mA Supply Current, 10dBm IIP3, 10dB NF, Usable as Up- or Down-Converter. |
| LT5568 | 700MHz to 1050MHz High Linearity Direct Quadrature Modulator | 22.9dBm OIP3 at 850MHz, –160.3dBm/Hz Noise Floor, 50Ω, 0.5$V_{DC}$ Baseband Interface, 3-Ch CDMA2000 ACPR = –71.4dBc at 850MHz |
| LT5572 | 1.5GHz to 2.5GHz High Linearity Direct Quadrature Modulator | 21.6dBm OIP3 at 2GHz, –158.6dBm/Hz Noise Floor, High-Ohmic 0.5$V_{DC}$ Baseband Interface, 4-Ch W-CDMA ACPR = –67.7dBc at 2.14GHz |
| **RF Power Detectors** | | |
| LTC®5505 | RF Power Detectors with >40dB Dynamic Range | 300MHz to 3GHz, Temperature Compensated, 2.7V to 6V Supply |
| LTC5507 | 100kHz to 1000MHz RF Power Detector | 100kHz to 1GHz, Temperature Compensated, 2.7V to 6V Supply |
| LTC5508 | 300MHz to 7GHz RF Power Detector | 44dB Dynamic Range, Temperature Compensated, SC70 Package |
| LTC5509 | 300MHz to 3GHz RF Power Detector | 36dB Dynamic Range, Low Power Consumption, SC70 Package |
| LTC5530 | 300MHz to 7GHz Precision RF Power Detector | Precision $V_{OUT}$ Offset Control, Shutdown, Adjustable Gain |
| LTC5531 | 300MHz to 7GHz Precision RF Power Detector | Precision $V_{OUT}$ Offset Control, Shutdown, Adjustable Offset |
| LTC5532 | 300MHz to 7GHz Precision RF Power Detector | Precision $V_{OUT}$ Offset Control, Adjustable Gain and Offset |
| LT5534 | 50MHz to 3GHz Log RF Power Detector with 60dB Dynamic Range | ±1dB Output Variation over Temperature, 38ns Response Time, Log Linear Response |
| LTC5536 | Precision 600MHz to 7GHz RF Power Detector with Fast Comparator Output | 25ns Response Time, Comparator Reference Input, Latch Enable Input, –26dBm to +12dBm Input Range |
| LT5537 | Wide Dynamic Range Log RF/IF Detector | Low Frequency to 1GHz, 83dB Log Linear Dynamic Range |


Linear Technology Corporation
1630 McCarthy Blvd., Milpitas, CA 95035-7417
(408) 432-1900 • FAX: (408) 434-0507 • www.linear.com
LT 1206 • PRINTED IN USA
© LINEAR TECHNOLOGY CORPORATION 2006