50MHz to 3GHz RF Power Detector with 60dB Dynamic Range

FEATURES

- **RF Frequency Range: 50MHz to 3GHz**
- **Linear Dynamic Range: 60dB**
- **Exceptional Accuracy over Temperature and Power Supply**
- **Fast Transient Response: 38ns Full-Scale Settling Time**
- Single 2.7V to 5.25V Supply
- Low Supply Current: 7mA
- Shutdown Current: 0.1µA
- Tiny 6-Lead SC70 Package

APPLICATIONS

- RF Receive Power Management
- RF Power Control
- CATV Power Detection
- Optical Receiver Gain Control

DESCRIPTION

The LT®5534 is a 50MHz to 3GHz monolithic RF power detector capable of measuring RF signals over a 60dB dynamic range. The RF signal in a decibel scale is precisely converted into DC voltage on a linear scale. The 60dB input dynamic range is achieved using cascaded RF detectors and RF limiters. Their outputs are summed to generate an accurate log-linear DC voltage proportional to the input RF signal in dB. The output is buffered with a low output impedance driver. The LT5534 delivers superior temperature stability (typical output variation within ±1dB over the full temperature range). The output responds in less than 40ns to a large RF input signal.

LT, LTC and LT are registered trademarks of Linear Technology Corporation.

TYPICAL APPLICATION

50MHz to 3GHz RF Power Detector

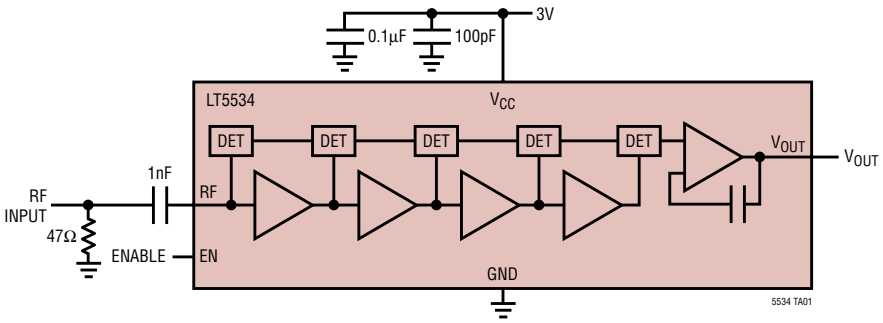

Output Voltage vs RF Input Power

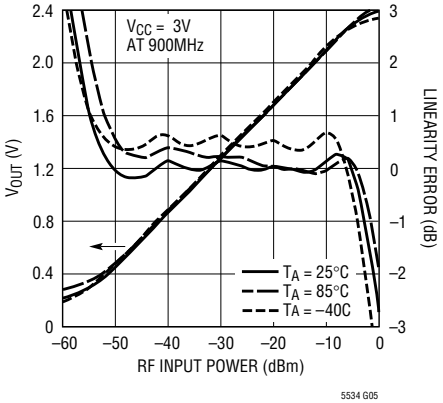

ABSOLUTE MAXIMUM RATINGS

(Note 1)

Power Supply Voltage 5.5V
Enable Voltage ..... 0V, V_{CC}
RF Voltage (+10dBm Equivalent) ..... ±1V
Operating Ambient Temperature Range .. –40°C to 85°C
Storage Temperature Range ..... –65°C to 125°C
Lead Temperature (Soldering, 10 sec)..... 300°C

PACKAGE/ORDER INFORMATION

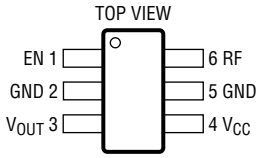

SC6 PACKAGE
6-LEAD PLASTIC SC70

T_{JMAX} = 125°C, θ_{JA} = 256°C/W

ORDER PART NUMBER
LT5534ESC6
SC6 PART MARKING
LBGD

Consult LTC Marketing for parts specified with wider operating temperature ranges.

ELECTRICAL CHARACTERISTICS

V_{CC} = 3V, EN = 3V, T_A = 25°C, source impedance = 50Ω, unless otherwise noted. Test circuit shown in Figure 1. (Note 2)

PARAMETER	CONDITIONS	MIN	TYP	MAX	UNITS
RF Input					
Frequency Range			50 to 3000		MHz
Input Impedance			2		kΩ
f_{RF} = 50MHz					
RF Input Power Range			–58 to +2		dBm
Dynamic Range (Note 3)	±3dB Linearity Error, T_A = –40°C to 85°C		60		dB
Output Slope			44		mV/dB
Output Variation vs Temperature	P_{IN} = –48dBm to –14dBm, T_A = –40°C to 85°C		0.007		dB/°C
f_{RF} = 900MHz					
RF Input Power Range			–60 to 0		dBm
Dynamic Range (Note 3)	±3dB Linearity Error, T_A = –40°C to 85°C		60		dB
Output Slope			41		mV/dB
Output Variation vs Temperature	P_{IN} = –48dBm to –14dBm, T_A = –40°C to 85°C		0.008		dB/°C
f_{RF} = 1900MHz					
RF Input Power Range			–63 to –2		dBm
Dynamic Range (Note 3)	±3dB Linearity Error, T_A = –40°C to 85°C		61		dB
Output Slope		31	36.6	43	mV/dB
Output Variation vs Temperature	P_{IN} = –48dBm to –14dBm, T_A = –40°C to 85°C		0.012		dB/°C
Output Intercept	50Ω External Termination, T_A = –40°C to 85°C	–70	–64	–58	dBm
f_{RF} = 2500MHz					
RF Input Power Range			–63 to –3		dBm
Dynamic Range (Note 3)	±3dB Linearity Error, T_A = –40°C to 85°C		60		dB
Output Slope			35		mV/dB
Output Variation vs Temperature	P_{IN} = –48dBm to –14dBm, T_A = –40°C to 85°C		0.025		dB/°C
Output Interface					
Output DC Voltage	No RF Input Signal	30	142	240	mV
Output Impedance			32		Ω
Output Bandwidth			30		MHz
Full-Scale Setting Time	Input from No Signal to –2dBm, to 90%		38		ns
Sourcing/Sinking			10/200		mA/μA

ELECTRICAL CHARACTERISTICS

V_{CC} = 3V, EN = 3V, T_A = 25°C, unless otherwise noted.

Test circuit shown in Figure 1. (Note 2)

PARAMETER	CONDITIONS	MIN	TYP	MAX	UNITS
Power Up/Down					
Turn-On Time			200		ns
Turn-Off Time			800		ns
EN = High (On)		0.9			V
EN = Low (Off)				0.6	V
Power Supply					
Supply Voltage		2.7		5.25	V
Supply Current	EN = High	5	7	9	mA
Shutdown Current	EN = Low		0.1	10	µA

Note 1: Absolute Maximum Ratings are those values beyond which the life of a device may be impaired.

Note 2: Specifications over the –40°C to 85°C temperature range are assured by design, characterization and correlation with statistical process control.

Note 3: The linearity error is calculated by the difference between the incremental slope of the output and the average output slope from –48dBm to –14dBm. The dynamic range is defined as the range over which the linearity error is within ±3dB.

TYPICAL PERFORMANCE CHARACTERISTICS

(Test circuit shown in Figure 1)

Output Voltage vs Frequency

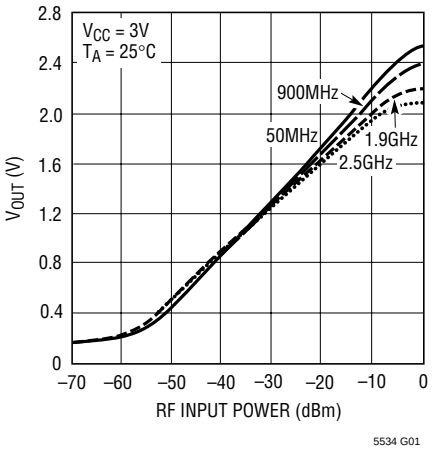

Linearity Error vs Frequency

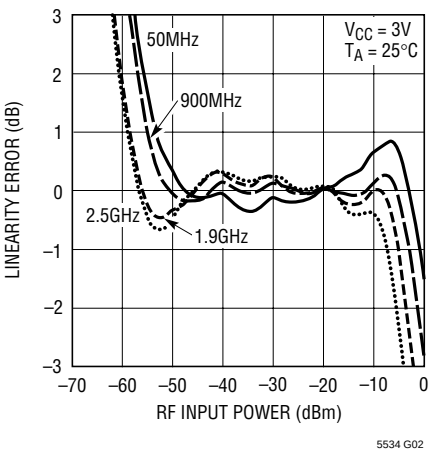

Output Voltage vs RF Input Power

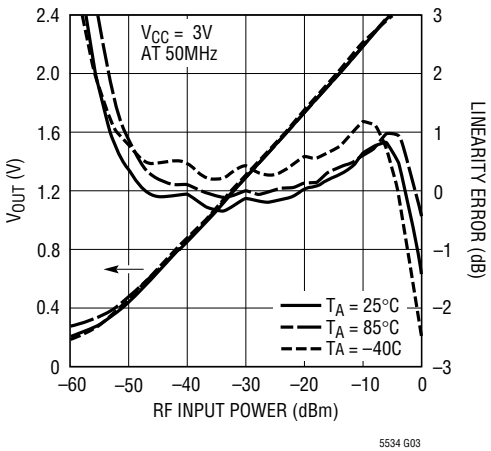

V_{OUT} Variation vs RF Input Power

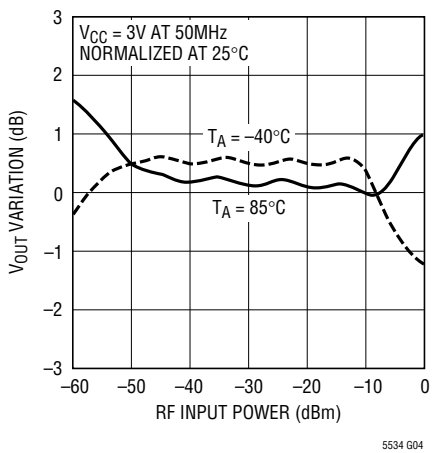

Output Voltage vs RF Input Power

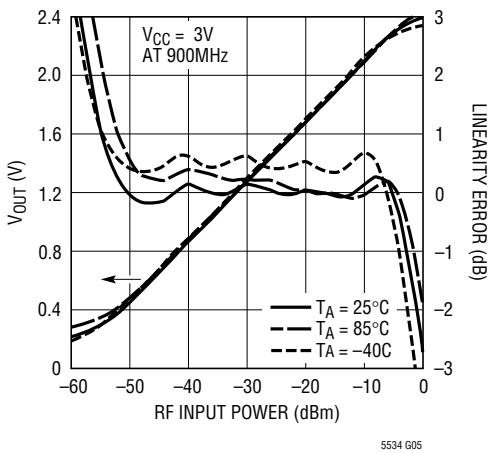

V_{OUT} Variation vs RF Input Power

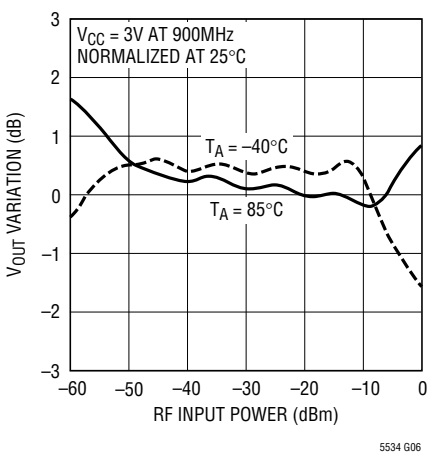

TYPICAL PERFORMANCE CHARACTERISTICS (Test circuit shown in Figure 1)

Output Voltage vs RF Input Power

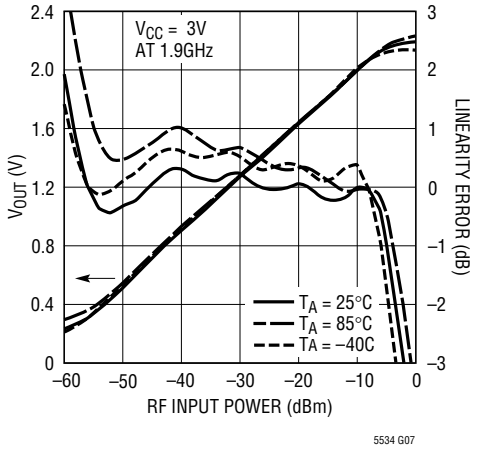

VOUT Variation vs RF Input Power

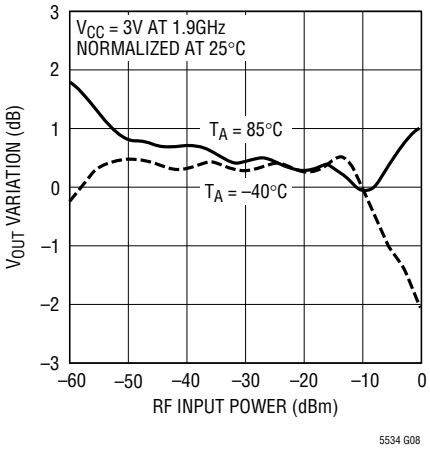

Output Voltage vs RF Input Power

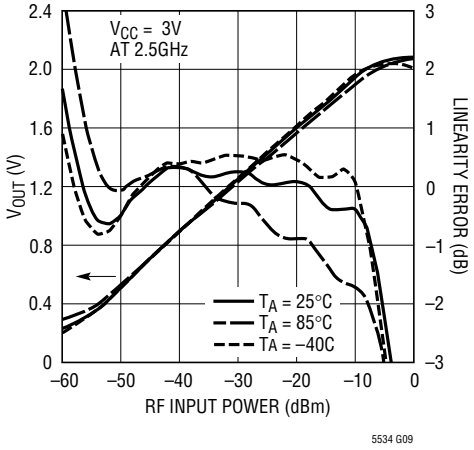

VOUT Variation vs RF Input Power

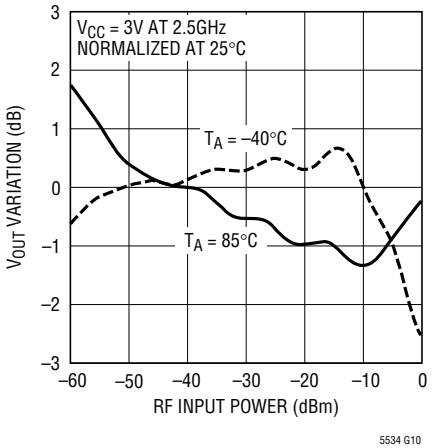

Output Voltage vs RF Input Power at VCC = 3V and 5V

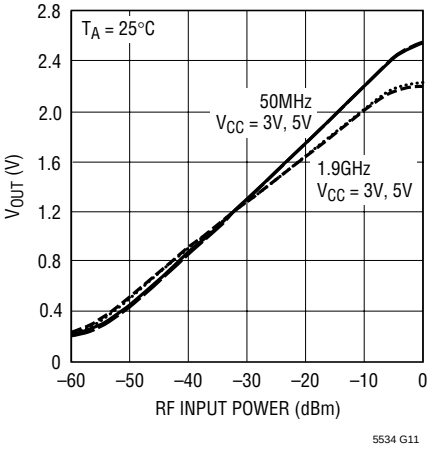

Output Voltage Distribution vs Temperature

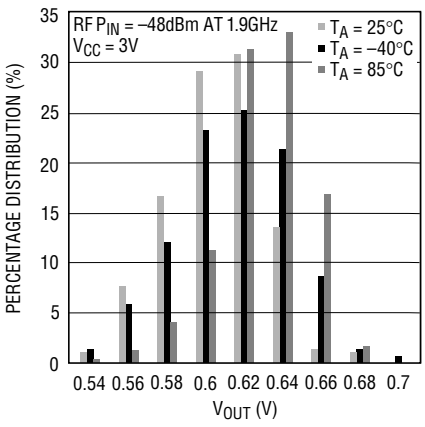

Output Voltage Distribution vs Temperature

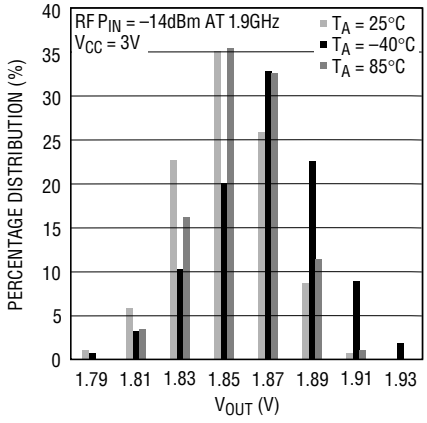

Supply Voltage vs Supply Current

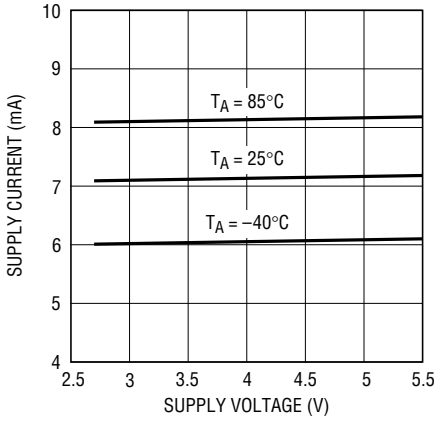

TYPICAL PERFORMANCE CHARACTERISTICS (Test circuit shown in Figure 1)

RF Input Return Loss vs Frequency

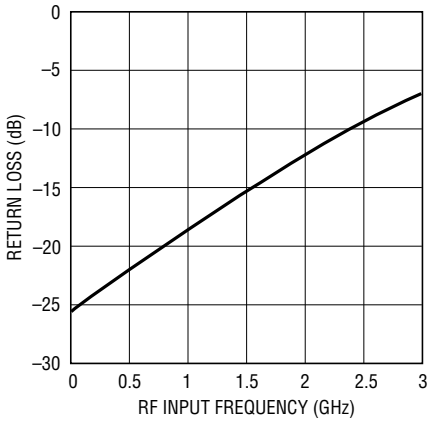

Output Transient Response

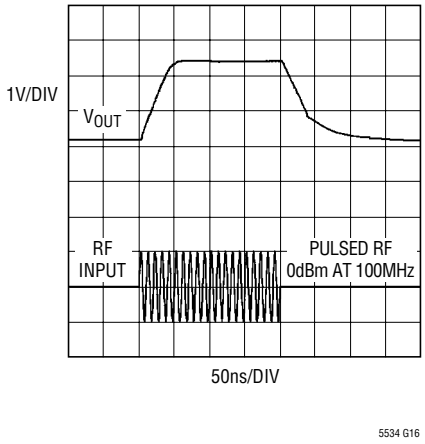

PIN FUNCTIONS

EN (Pin 1): Enable. When the input voltage is higher than 0.9V, the circuit is completely turned on. When the input voltage is less than 0.6V, the circuit is turned off.

GND (Pins 2, 5): Ground.

V_{OUT} (Pin 3): RF Detector Output.

V_{CC} (Pin 4): Power Supply. This pin should be decoupled using 100pF and 0.1µF capacitors.

RF (Pin 6): RF input. This pin is internally biased to V_{CC} – 0.18V. A coupling capacitor must be used to connect to the RF signal source.

BLOCK DIAGRAM

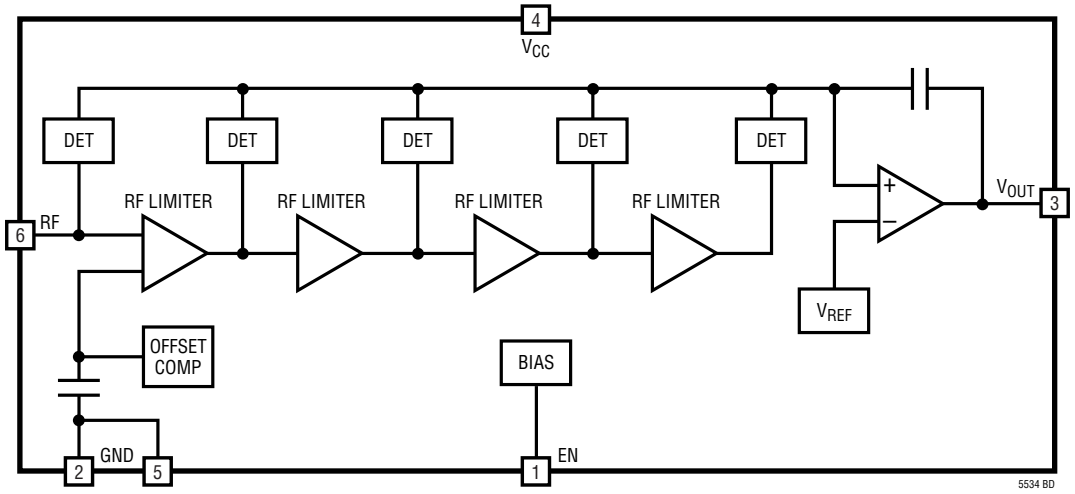

TEST CIRCUIT

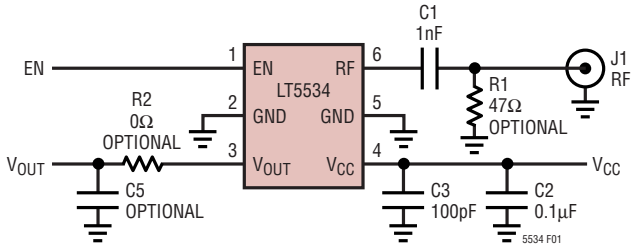

REF DES	VALUE	SIZE	PART NUMBER
C1	1nF	0402	AVX 04025C102JAT2A
C2	0.1µF	0603	TAIYO YUDEN TMK107BJ104KA
C3	100pF	0603	AVX 06035C101KAT2A
C5		0603	OPTIONAL
R1	47Ω	0402	OPTIONAL
R2	0Ω	0603	OPTIONAL

Figure 1. Evaluation Circuit Schematic

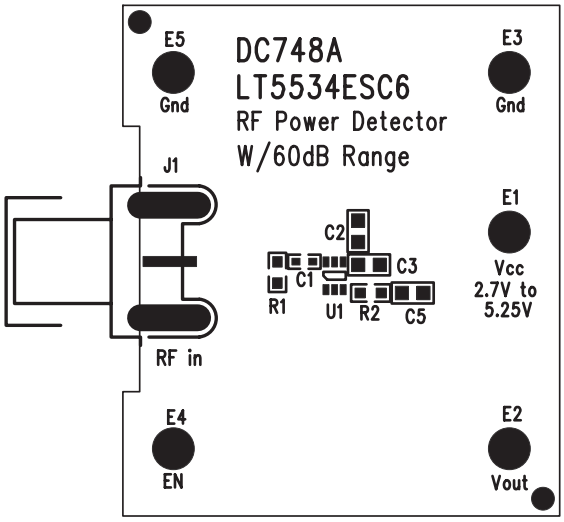

Figure 2. Component Side Silkscreen of Evaluation Board

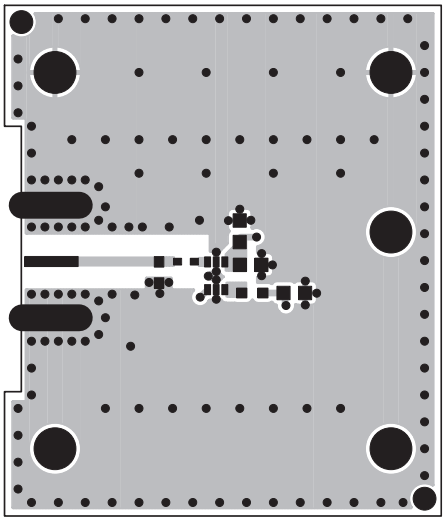

Figure 3. Component Side Layout of Evaluation Board

APPLICATIONS INFORMATION

The LT5534 is a logarithmic-based detector, capable of measuring an RF signal over the frequency range from 50MHz to 3GHz. The 60dB linear dynamic range is achieved with very stable output over the full temperature range from –40°C to 85°C. The absolute variation over temperature is typically within ±1dB over a 47dB dynamic range at 1.9GHz.

RF Input Port

The RF port is internally biased at V_{CC}-0.18V. The pin should be DC blocked when connected to ground or other matching components. A 47Ω resistor (R1) connected to ground will provide better than 10dB input return loss up to 2.5GHz. An additional 2nH inductance in series with R1 will provide improved input matching up to 3GHz. The impedance vs frequency of the RF input is detailed in Table 1.

The approximate linear RF input power range of the LT5534 is from –62dBm to –2dBm with a 50Ω source impedance. However, this range can be adjusted either upward or downward to tailor for a particular application

APPLICATIONS INFORMATION

Table 1. RF Input Impedance

FREQUENCY (MHz)	INPUT IMPEDANCE (Ω)	S11	
		MAG	ANGLE (DEG)
50	1429-j429	0.938	–1.1
100	947-j710	0.934	–2.9
200	509-j609	0.922	–5.6
400	250-j440	0.908	–9.9
600	149-j344	0.900	–14.1
800	96.8-j278	0.896	–18.3
1000	67.6-j229	0.893	–22.7
1200	49.7-j193	0.889	–27.3
1400	38.4-j165	0.883	–32.3
1600	30.8-j143	0.879	–37.3
1800	25.4-j125	0.873	–42.6
2000	21.4-j109	0.866	–48.0
2200	18.5-j96.2	0.862	–53.6
2400	16.6-j85.0	0.848	–59.6
2600	15.2-j75.7	0.834	–65.6
2800	13.7-j67.5	0.826	–71.8
3000	12.1-j60.1	0.822	–78.2

need. By simply inserting an attenuator in front of the RF input, the power range is shifted higher by the amount of the attenuation. Moreover, due to the high RF input impedance of the LT5534, the detecting range can be moved downward for better detection sensitivity by using a narrow band L-C matching network. By this means, the sensitivity of the detector can be extended to as low as –75dBm. By changing the value of resistor R1, the sensitivity of the detector can be fine-tuned within the range from –75dBm to –62dBm. Though the range is adjustable, the overall linear dynamic range remains the same.

Output Interface

The output interface of the LT5534 is shown in Figure 4. The output currents from the RF detectors are summed and converted into an output voltage, V_{OUT}. The maximum charging current available to the output load is about 200µA. The internal compensation capacitor C_C is used to guarantee stable operation for a large capacitive output load. The slew rate is 133V/µs, and the small-signal output bandwidth is approximately 30MHz when the output is resistively

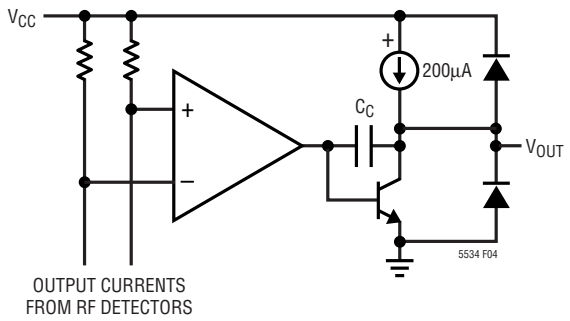

Figure 4. Simplified Circuit Schematic of the Output Interface

terminated or open. The fastest output transient response is achieved when a large signal is applied to the RF input port. See the output transient response plot in the Typical Performance Characteristics section.

When the output is terminated with a load capacitance C_L, the slew rate is then limited to 200µA/(C_L + 1.5pF). For example, the slew rate is reduced to 17.4V/µs when C_L = 10pF. A capacitive load may result in output voltage overshoot, which can be minimized with a series compensation resistor R2 as shown in Figure 1. The suggested resistor values for various capacitive loads are listed in Table 2.

Table 2. Resistor Value for Capacitive Output

C5 (pF)	R2 (kΩ)
1.5	5
5	4
10	2.5
20	2

The optional RC network at the output (R2 and C5 on the demo board) can also provide further output filtering, if needed. The output bandwidth is primarily dictated by the RC constant of this lowpass filter when its corner frequency is less than 30MHz.

When a large signal (e.g., –2dBm) is present at the RF input port, the output voltage swing can be as high as 2.4V. To assure proper operation of the chip, the minimum resistive load at the output termination should be greater than 18kΩ.

Information furnished by Linear Technology Corporation is believed to be accurate and reliable. However, no responsibility is assumed for its use. Linear Technology Corporation makes no representation that the interconnection of its circuits as described herein will not infringe on existing patent rights.

PACKAGE DESCRIPTION

SC6 Package
6-Lead Plastic SC70
(Reference LTC DWG # 05-08-1638)

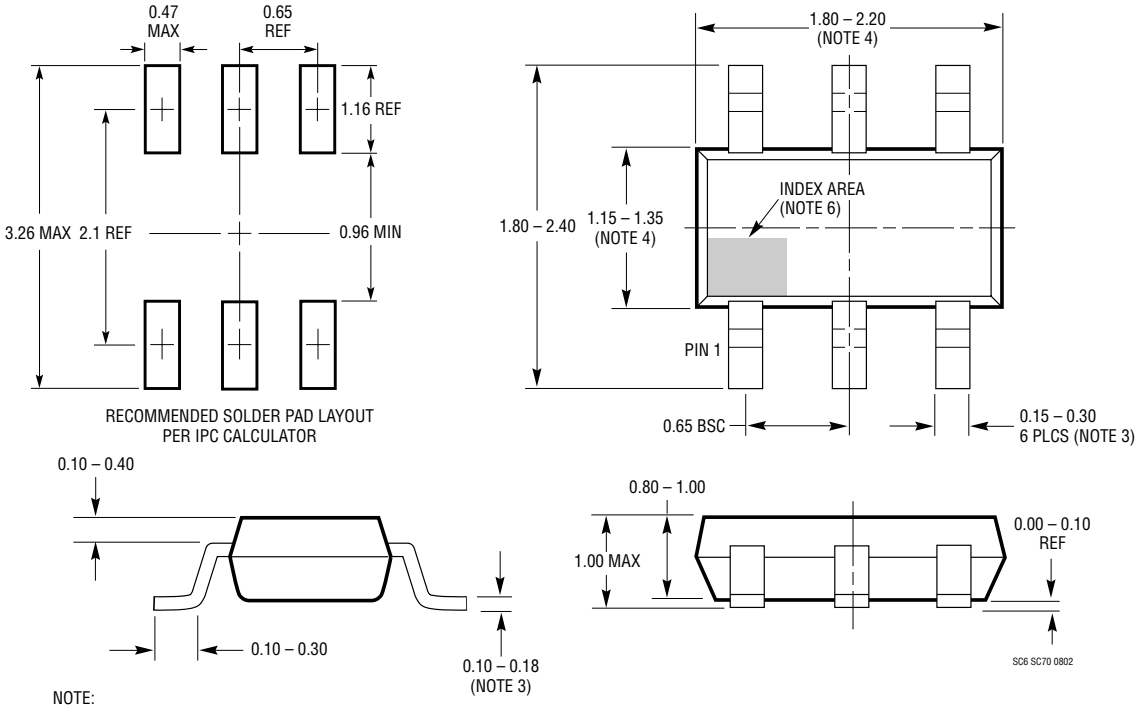

NOTE:
1. DIMENSIONS ARE IN MILLIMETERS
2. DRAWING NOT TO SCALE
3. DIMENSIONS ARE INCLUSIVE OF PLATING
4. DIMENSIONS ARE EXCLUSIVE OF MOLD FLASH AND METAL BURR
5. MOLD FLASH SHALL NOT EXCEED 0.254mm
6. DETAILS OF THE PIN 1 INDENTIFIER ARE OPTIONAL, BUT MUST BE LOCATED WITHIN THE INDEX AREA
7. EIAJ PACKAGE REFERENCE IS EIAJ SC-70

RELATED PARTS

PART NUMBER	DESCRIPTION	COMMENTS
LT5504	800MHz to 2.7GHz RF Measuring Receiver	80dB Dynamic Range, Temperature Compensated, 2.7V to 5.25V Supply
LT5506	500MHz Quadrature IF Demodulator with VGA	1.8V to 5.25V Supply, 40MHz to 500MHz IF, –4dB to 57dB Linear Power Gain, 8.8MHz Baseband Bandwidth
LT5511	High Linearity Upconverting Mixer	RF Output to 3GHz, 17dBm IIP3, Integrated LO Buffer
LT5512	DC-3GHz High Signal Level Downconverting Mixer	DC to 3GHz, 21dBm IIP3, Integrated LO Buffer
LT5515	1.5GHz to 2.5GHz Direct Conversion Quadrature Demodulator	20dBm IIP3, Integrated LO Quadrature Generator
LT5516	0.8GHz to 1.5GHz Direct Conversion Quadrature Demodulator	21.5dBm IIP3, Integrated LO Quadrature Generator
LT5517	40MHz to 900MHz Direct Conversion Quadrature Demodulator	21dBm IIP3, Integrated LO Quadrature Generator
LT5519	0.7GHz to 1.4GHz High Linearity Upconverting Mixer	17.1dBm IIP3, 50Ω Single Ended RF and LO Ports
LT5520	1.3GHz to 2.3GHz High Linearity Upconverting Mixer	15.9dBm IIP3, 50Ω Single Ended RF and LO Ports
LT5522	600MHz to 2.7GHz High Linearity Downconverting Mixer	4.5V to 5.25V Supply, 25dBm IIP3 at 900MHz, NF = 12.5dB, 50Ω Single Ended RF and LO Ports
LTC®5532	300MHz to 7GHz Precision RF Power Detector	Precision V_{OUT} Offset Control, Adjustable Gain and Offset
LT5546	500MHz Quadrature IF Demodulator with VGA and 17MHz Baseband Bandwidth	17MHz Baseband Bandwidth, 40MHz to 500MHz IF, 1.8V to 5.25V Supply, –7dB to 56dB Linear Power Gain

Linear Technology Corporation
1630 McCarthy Blvd., Milpitas, CA 95035-7417
(408) 432-1900 • FAX: (408) 434-0507 • www.linear.com
LT/TP 0404 1K • PRINTED IN THE USA
© LINEAR TECHNOLOGY CORPORATION 2004