Triple Output LED Driver

FEATURES

- **True Color PWM™ Dimming Delivers Up to 3000:1 Dimming Ratio**
- **Built-In Gate Driver for PMOS LED Disconnect**
- **Three Independent Driver Channels with 750mA, 45V Internal Switches**
- **Operates in Buck, Boost, Buck-Boost Modes**
- CTRL Pin Accurately Sets LED Current Sense Threshold Over a Range of 10mV to 100mV
- Adjustable Frequency: 330kHz to 2.1MHz
- Open LED Protection
- Wide V_{IN} Supply Range:
  - Operation from 3V to 30V
  - Transient Protection to 40V
- Surface Mount Components
- 28-Lead (4mm × 5mm) QFN and TSSOP Packages

APPLICATIONS

- RGB Lighting
- Billboards and Large Displays
- Automotive and Avionic Lighting
- Constant-Current Sources

DESCRIPTION

The LT®3496 is a triple output DC/DC converter designed to operate as a constant-current source and is ideal for driving LEDs. The LT3496 works in buck, boost or buck-boost mode. The LT3496 uses a fixed frequency, current mode architecture resulting in stable operation over a wide range of supply and output voltages. A frequency adjust pin allows the user to program switching frequency between 330kHz and 2.1MHz to optimize efficiency and external component size.

The LT3496 supports 3000:1 dimming control on each channel. Each of the three regulators is independently operated by that channel's PWM signal. The PWM feature allows precise adjustment of the color mixing or dimming ratio of the LED source. Each of the three channels has a built-in gate driver to drive an external LED-disconnect P-channel MOSFET, allowing high dimming range. The output current range of each channel of the LT3496 is programmed with an external sense resistor.

The CTRL pins are used to adjust the LED currents either for analog dimming or overtemperature protection.

LT, LTC, LTM, Linear Technology and the Linear logo are registered trademarks and ThinSOT and True Color PWM are trademarks of Linear Technology Corporation. All other trademarks are the property of their respective owners. Protected by U.S. Patents, including 7199560, 7321203, and others pending.

TYPICAL APPLICATION

High Dimming Ratio Triple Output LED Power Supply

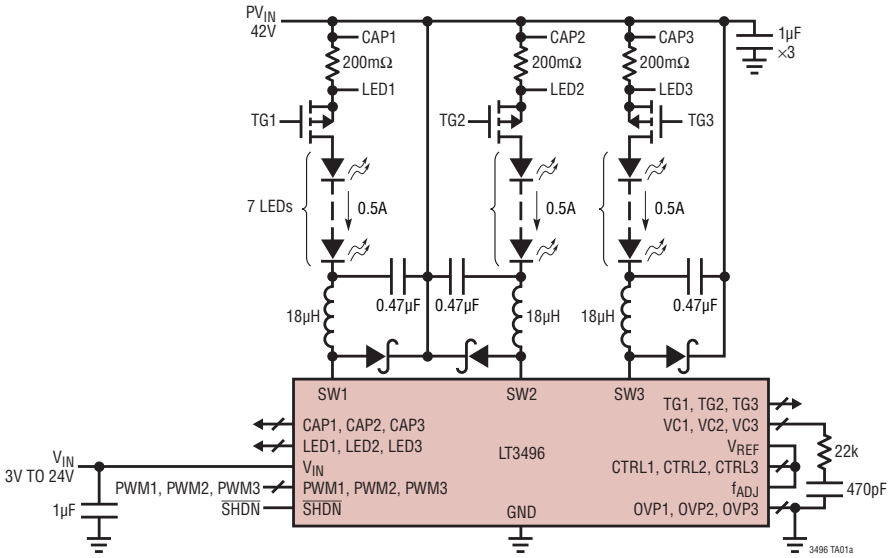

3000:1 PWM Dimming at 120Hz

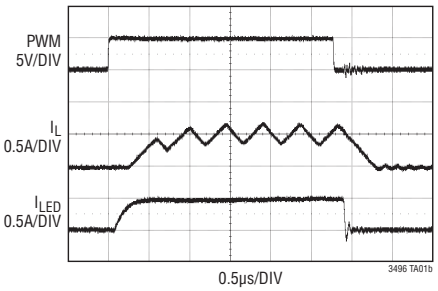

ABSOLUTE MAXIMUM RATINGS (Note 1)

V_{IN} (Note 4) 40V
SW1, SW2, SW3, LED1, LED2, LED3,
CAP1, CAP2, CAP3 ..... 45V
TG1, TG2, TG3 ..... CAP – 10V to CAP
PWM1, PWM2, PWM3 ..... 20V
V_{REF}, CTRL1, CTRL2, CTRL3, f_{ADJ}, VC1, VC2, VC3,
OVP1, OVP2, OVP3 ..... 2.5V
$\overline{SHDN}$ (Note 4) ..... V_{IN}

Operating Junction Temperature Range (Notes 2, 6)
LT3496E ..... –40°C to 125°C
LT3496I ..... –40°C to 125°C
LT3496H ..... –40°C to 150°C
Storage Temperature Range
QFN ..... –65°C to 150°C
TSSOP ..... 65°C to 125°C
Lead Temperature (Soldering, 10 sec)
TSSOP ..... 300°C

PIN CONFIGURATION

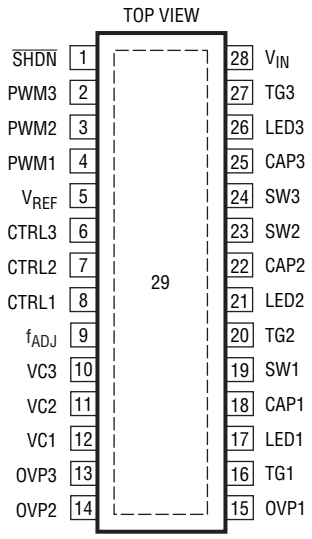

FE PACKAGE
28-LEAD PLASTIC TSSOP
θ_{JA} = 30°C/W, θ_{JC} = 10°C/W
EXPOSED PAD (PIN 29) IS GND, MUST BE SOLDERED TO PCB

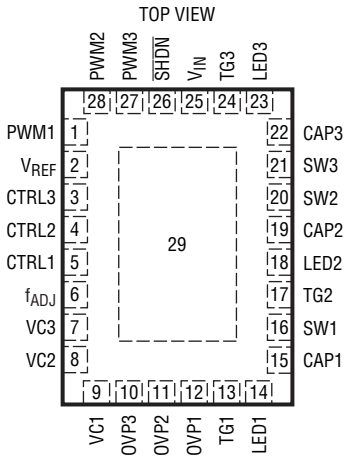

UFD PACKAGE
28-LEAD (4mm × 5mm) PLASTIC QFN
θ_{JA} = 34°C/W, θ_{JC} = 2.7°C/W
EXPOSED PAD (PIN 29) IS GND, MUST BE SOLDERED TO PCB

ORDER INFORMATION

LEAD FREE FINISH	TAPE AND REEL	PART MARKING*	PACKAGE DESCRIPTION	TEMPERATURE RANGE
LT3496EFE#PBF	LT3496EFE#TRPBF	3496FE	28-Lead Plastic TSSOP	–40°C to 125°C
LT3496IFE#PBF	LT3496IFE#TRPBF	3496FE	28-Lead Plastic TSSOP	–40°C to 125°C
LT3496EUFD#PBF	LT3496EUFD#TRPBF	3496	28-Lead (4mm × 5mm) Plastic QFN	–40°C to 125°C
LT3496IUFD#PBF	LT3496IUFD#TRPBF	3496	28-Lead (4mm × 5mm) Plastic QFN	–40°C to 125°C
LT3496HUFD#PBF	LT3496HUFD#TRPBF	3496	28-Lead (4mm × 5mm) Plastic QFN	–40°C to 150°C

Consult LTC Marketing for parts specified with wider operating temperature ranges. *The temperature grade is identified by a label on the shipping container.
Consult LTC Marketing for information on non-standard lead based finish parts.

*For more information on lead free part marking, go to: http://www.linear.com/leadfree/
For more information on tape and reel specifications, go to: http://www.linear.com/tapeandreel/

ELECTRICAL CHARACTERISTICS

The ● denotes the specifications which apply over the full operating temperature range, otherwise specifications are at T_A = 25°C. V_{IN} = 5V, $V_{\overline{SHDN}}$ = 5V, CAP1, CAP2, CAP3 = 5V, PWM1, PWM2, PWM3 = 5V, f_{ADJ} = 0.5V, CTRL1, CTRL2, CTRL3 = 1.5V, OVP1, OVP2, OVP3 = 0V, unless otherwise noted.

PARAMETER	CONDITIONS		MIN	TYP	MAX	UNITS
V_{IN} Operation Voltage	(Note 4)		3		30	V
V_{IN} Undervoltage Lockout				2.1	2.4	V
Full-Scale LED Current Sense Voltage ($V_{CAP1-LED1}$, $V_{CAP2-LED2}$, $V_{CAP3-LED3}$)	CAP1, CAP2, CAP3 = 24V ●		98 97	100	103 104	mV mV
One-Tenth Scale LED Current Sense Voltage ($V_{CAP1-LED1}$, $V_{CAP2-LED2}$, $V_{CAP3-LED3}$)	CTRL1, CTRL2, CTRL3 = 100mV, CAP1, CAP2, CAP3 = 24V H-Grade E-Grade, I-Grade	 ● ●	 7.5 7.5	 10 10	 13.5 12.5	 mV mV
CAP1, CAP2, CAP3 Operating Voltage	0V ≤ $V_{CAP1-LED1}$ ≤ 104mV 0V ≤ $V_{CAP2-LED2}$ ≤ 104mV 0V ≤ $V_{CAP3-LED3}$ ≤ 104mV		2.5		45	V
V_{REF} Output Voltage	I_{REF} = 200µA, Current Out of Pin	●	1.96	2	2.04	V
V_{REF} Line Regulation	3V ≤ V_{IN} ≤ 40V, I_{REF} = 10µA				0.03	%/V
Quiescent Current in Shutdown	$\overline{SHDN}$ = 0V			0.1	10	µA
Quiescent Current Idle	PWM1, PWM2, PWM3 = 0V			6	7.5	mA
Quiescent Current Active (Not Switching)				11	14	mA
Switching Frequency	f_{ADJ} = 1.5V f_{ADJ} = 0.5V f_{ADJ} = 0.1V		1900	2100 1300 330	2300	kHz kHz kHz
Maximum Duty Cycle	f_{ADJ} = 1.5V (2.1MHz) f_{ADJ} = 0.5V (1.3MHz) f_{ADJ} = 0.1V (330kHz)	●	70	78 87 97		% % %
CTRL1, CTRL2, CTRL3 Input Bias Current	Current Out of Pin, CTRL1, CTRL2, CTRL3 = 0.1V			20	100	nA
f_{ADJ} Input Bias Current	Current Out of Pin, f_{ADJ} = 0.1V			20	100	nA
OVP1, OVP2, OVP3 Input Bias Current	Current Out of Pin, OVP1, OVP2, OVP3 = 0.1V			10	100	nA
OVP1, OVP2, OVP3 Threshold			0.95	1	1.05	V
VC1, VC2, VC3 Idle Input Bias Current	PWM1, PWM2, PWM3 = 0V		–20	0	20	nA
VC1, VC2, VC3 Output Impedance	CAP1, CAP2, CAP3 = 24V			10		MΩ
EAMP g_m ($\Delta I_{VC}/\Delta V_{CAP-LED}$)	CAP1, CAP2, CAP3 = 24V			200		µS
SW1, SW2, SW3 Current Limit	(Note 3)		750	1000	1250	mA
SW1, SW2, SW3 V_{CESAT}	I_{SW} = 500mA (Note 3)			260		mV
SW1, SW2, SW3 Leakage Current	$\overline{SHDN}$ = 0V, SW = 5V				2	µA
CAP1, CAP2, CAP3 Input Bias Current				180	250	µA
CAP1, CAP2, CAP3, LED1, LED2, LED3 Idle Input Bias Current	PWM1, PWM2, PWM3 = 0V				1	µA
CAP1, CAP2, CAP3, LED1, LED2, LED3 Input Bias Current in Shutdown	$\overline{SHDN}$ = 0V				1	µA

ELECTRICAL CHARACTERISTICS

The ● denotes the specifications which apply over the full operating temperature range, otherwise specifications are at T_A = 25°C. V_{IN} = 5V, $V_{\overline{SHDN}}$ = 5V, CAP1, CAP2, CAP3 = 5V, PWM1, PWM2, PWM3 = 5V, f_{ADJ} = 0.5V, CTRL1, CTRL2, CTRL3 = 1.5V, OVP1, OVP2, OVP3 = 0V, unless otherwise noted.

PARAMETER	CONDITIONS		MIN	TYP	MAX	UNITS
$\overline{SHDN}$ Input Low Voltage					0.4	V
$\overline{SHDN}$ Input High Voltage			1.5			V
$\overline{SHDN}$ Pin Current	$V_{\overline{SHDN}}$ = 5V, Current Into Pin			65	100	µA
PWM1, PWM2, PWM3 Input Low Voltage					0.4	V
PWM1, PWM2, PWM3 Input High Voltage			1.2			V
PWM1, PWM2, PWM3 Pin Current	Current Into Pin			160	210	µA
Gate Off Voltage (CAP1 – TG1, CAP2 – TG2, CAP3 – TG3)	CAP1, CAP2, CAP3 = 40V, PWM1, PWM2, PWM3 = 0V			0.1	0.3	V
Gate On Voltage (CAP1 – TG1, CAP2 – TG2, CAP3 – TG3)	CAP1, CAP2, CAP3 = 40V		5.5	6.5	7.5	V
Gate Turn-On Delay	C_{LOAD} = 300pF, CAP1, CAP2, CAP3 = 40V (Note 5)			110		ns
Gate Turn-Off Delay	C_{LOAD} = 300pF, CAP1, CAP2, CAP3 = 40V (Note 5)			110		ns

Note 1: Stresses beyond those listed under Absolute Maximum Ratings may cause permanent damage to the device. Exposure to any Absolute Maximum Rating condition for extended periods may affect device reliability and lifetime.

Note 2: The LT3496E is guaranteed to meet performance specifications from 0°C to 125°C junction temperature. Specifications over the –40°C to 125°C operating junction temperature range are assured by design, characterization and correlation with statistical process controls. The LT3496I is guaranteed over the full –40°C to 125°C operating junction temperature range. The LT3496H is guaranteed over the full –40°C to 150°C operating junction temperature range. High junction temperatures degrade operating lifetimes. Operating lifetime is derated at junction temperatures greater than 125°C.

Note 3: Current flows into pin. Current limit and switch V_{CESAT} is guaranteed by design and/or correlation to static test.

Note 4: Absolute maximum voltage at the V_{IN} and $\overline{SHDN}$ pins is 40V for nonrepetitive 1 second transients, and 30V for continuous operation.

Note 5: Gate turn-on/turn-off delay is measured from 50% level of PWM voltage to 90% level of gate on/off voltage.

Note 6: The LT3496 includes overtemperature protection that is intended to protect the device during momentary overload conditions. Junction temperature will exceed the maximum operating junction temperature when overtemperature protection is active. Continuous operating above the specified maximum operating junction temperature may impair device reliability.

TYPICAL PERFORMANCE CHARACTERISTICS (T_A = 25°C unless otherwise noted)

Quiescent Current

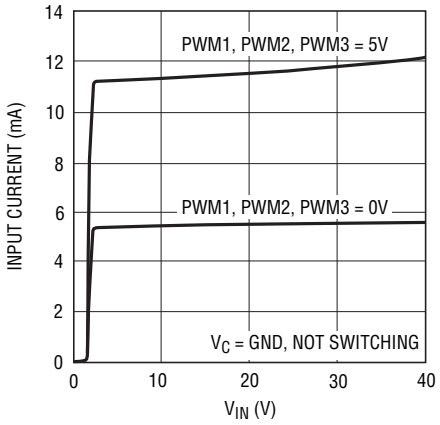

3496 G01

Switch On Voltage

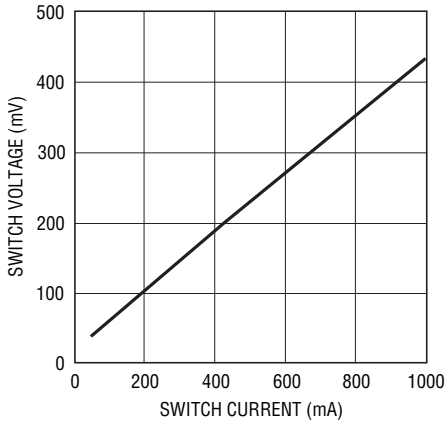

3496 G02

Switch Current Limit vs Duty Cycle

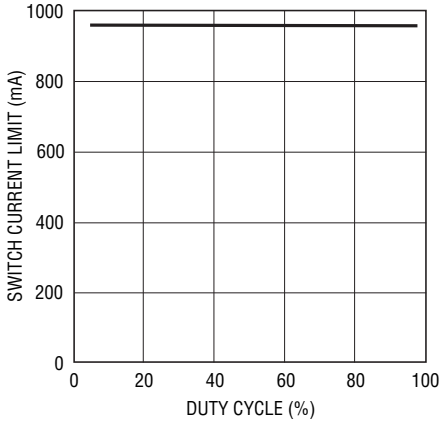

3496 G03

Switch Current Limit vs Temperature

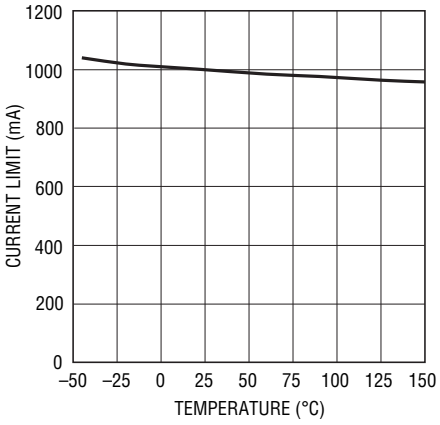

3496 G04

Reference Voltage vs Temperature

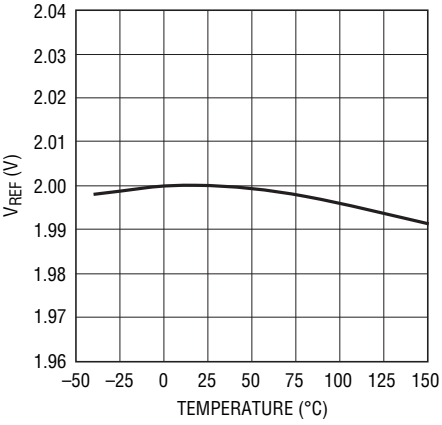

3496 G05

Switch Frequency vs f_{ADJ}

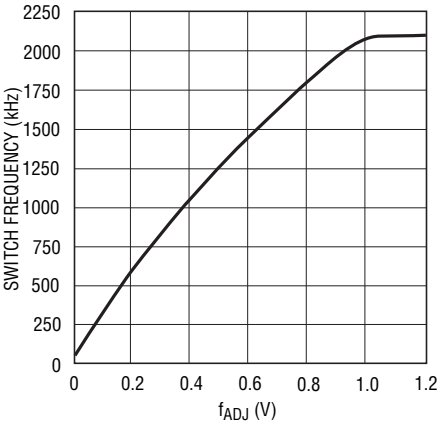

3496 G06

TYPICAL PERFORMANCE CHARACTERISTICS (T_A = 25°C unless otherwise noted)

Switch Frequency vs Temperature

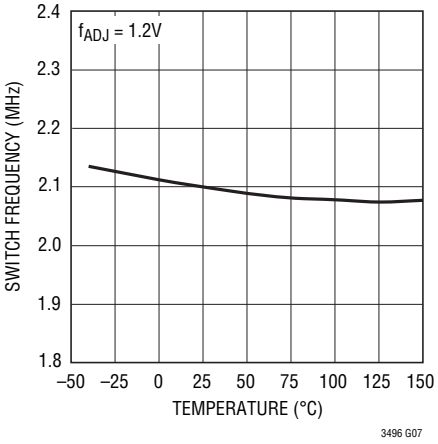

$V_{CAP-LED}$ Threshold vs CTRL

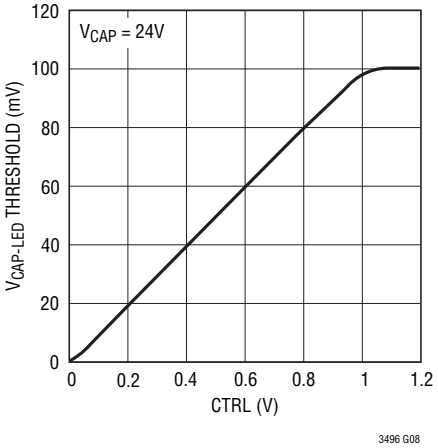

$V_{CAP-LED}$ Threshold vs V_{CAP}

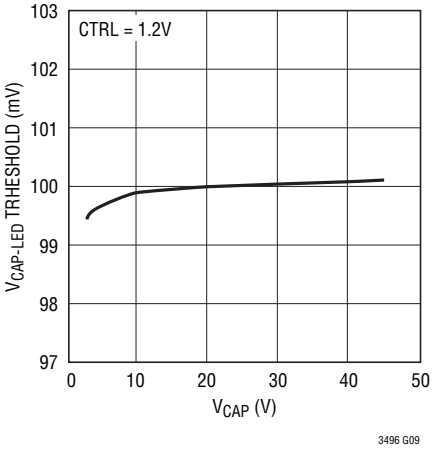

$V_{CAP-LED}$ Threshold vs Temperature

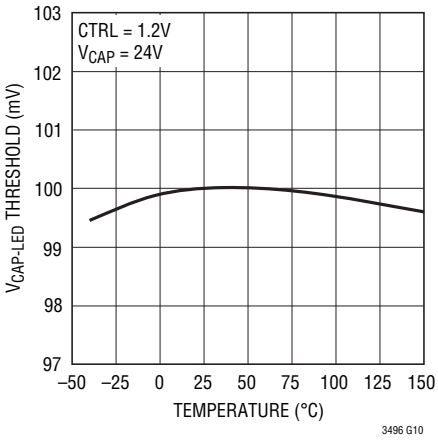

PMOS Turn On Waveforms

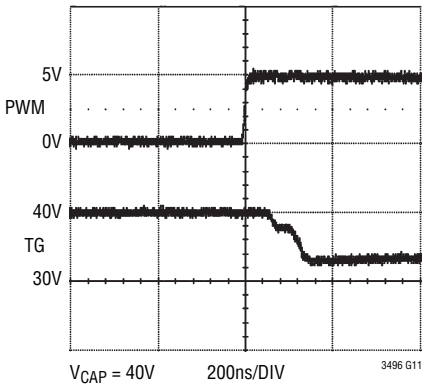

PMOS Turn Off Waveforms

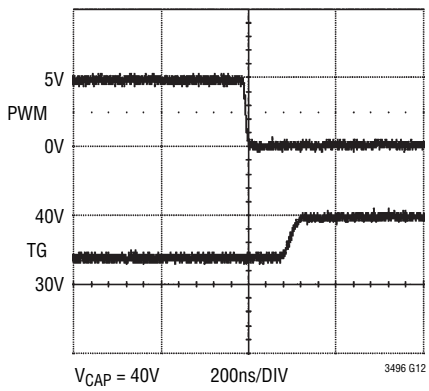

PIN FUNCTIONS

PWM1, PWM2, PWM3: Pulse Width Modulated Inputs. Signal low turns off the respective converter, reduces quiescent supply current and causes the VC pin for that converter to become high impedance. PWM pin must not be left floating; tie to V_{REF} if not used.

V_{REF}: Reference Output Pin. Can supply up to 200µA. The nominal Output Voltage is 2V.

CTRL1, CTRL2, CTRL3: LED Current Adjustment Pins. Sets voltage across external sense resistor between CAP and LED pins of the respective converter. Setting CTRL voltage to be less than 1V will control the current sense voltage to be one-tenth of CTRL voltage. If CTRL voltage is higher than 1V, the default current sense voltage is 100mV. The CTRL pin must not be left floating.

f_{ADJ}: Switching Frequency Adjustment Pin. Setting f_{ADJ} voltage to be less than 1V will adjust switching frequency up to 2.1MHz. If f_{ADJ} voltage is higher than 1V, the default switching frequency is 2.1MHz. The f_{ADJ} pin must not be left floating.

VC1, VC2, VC3: Error Amplifier Compensation Pins. Connect a series RC from these pins to GND.

OVP1, OVP2, OVP3: Open LED Protection Pins. A voltage higher than 1V on OVP turns off the internal main switch of the respective converter. Tie to ground if not used.

TG1, TG2, TG3: The Gate Driver Output Pins for Disconnnect P-Channel MOSFETs. One for each converter. When the PWM pin is low, the TG pin pulls up to CAP to turn off the external MOSFET. When the PWM pin is high, the external MOSFET turns on. Respective CAP-TG is limited to 6.5V to protect the MOSFET. Leave open if the external MOSFET is not used.

LED1, LED2, LED3: Noninverting Inputs of Current Sense Error Amplifiers. Connect directly to LED current sense resistor terminal for current sensing of the respective converter

CAP1, CAP2, CAP3: Inverting Inputs of Current Sense Error Amplifiers. Connect directly to other terminal of LED current sense resistor terminal of the respective converter.

SW1, SW2, SW3: Switch Pins. Collector of the internal NPN power switch of the respective converter. Connect to external inductor and anode of external Schottky rectifier of the respective converter. Minimize the metal trace area connected to this pin to minimize electromagnetic interference.

V_{IN}: Input Supply Pin. Must be locally bypassed. Powers the internal control circuitry.

$\overline{SHDN}$: Shutdown Pin. Used to shut down the switching regulator and the internal bias circuits for all three converters. Tie to 1.5V or greater to enable the device. Tie below 0.4V to turn off the device.

Exposed Pad: Signal Ground and Power Ground. Solder paddle directly to ground plane.

BLOCK DIAGRAM

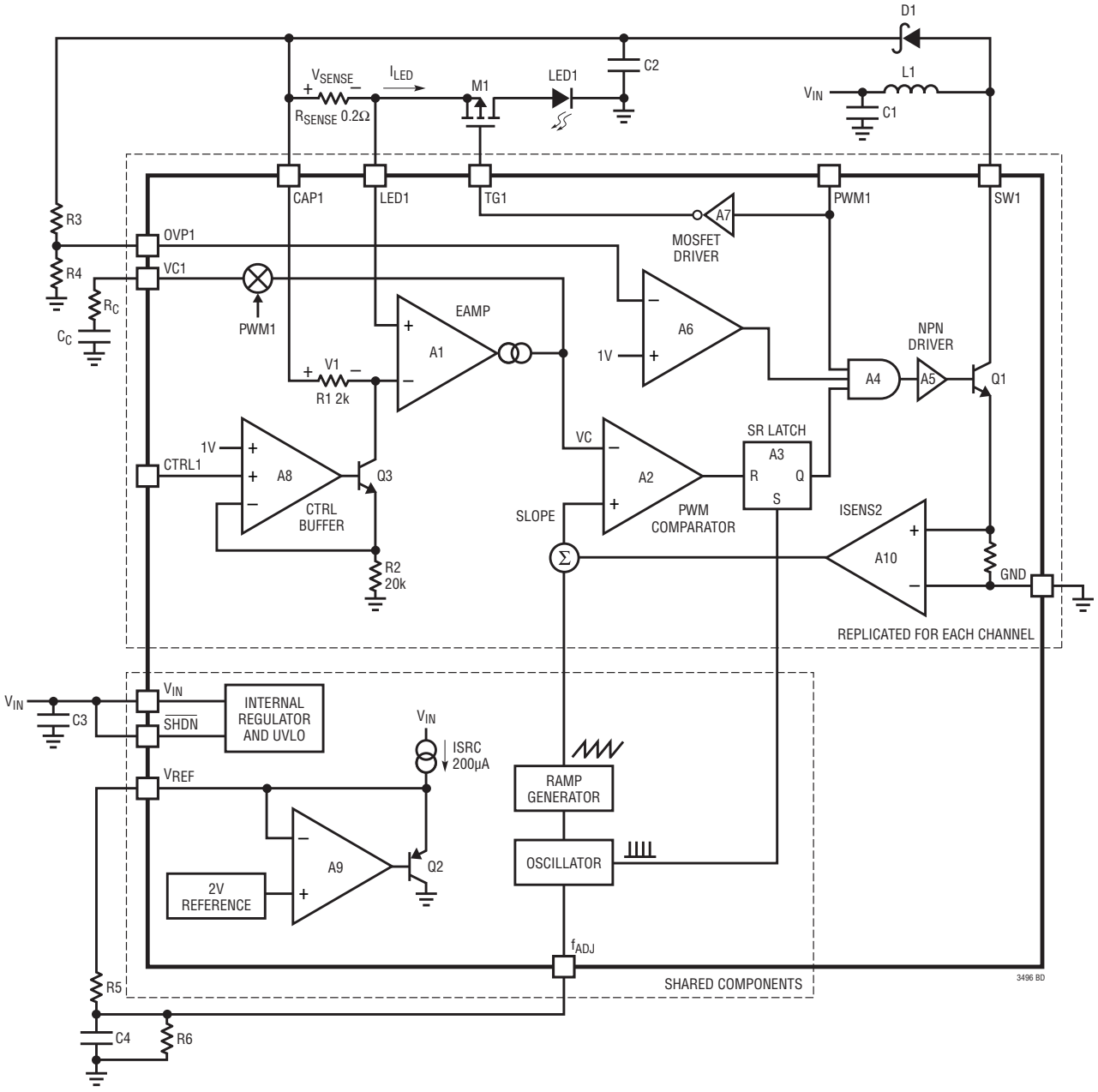

Figure 1. LT3496 Block Diagram Working in Boost Configuration

APPLICATIONS INFORMATION

Operation

The LT3496 uses a fixed frequency, current mode control scheme to provide excellent line and load regulation. Operation can be best understood by referring to the Block Diagram in Figure 1. The oscillator, ramp generator, reference, internal regulator and UVLO are shared among the three converters. The control circuitry, power switch etc., are replicated for each of the three converters. Figure 1 shows the shared circuits and only converter 1 circuits.

If the $\overline{SHDN}$ pin is tied to ground, the LT3496 is shut down and draws minimal current from V_{IN}. If the $\overline{SHDN}$ pin exceeds 1.5V, the internal bias circuits turn on. The switching regulators start to operate when their respective PWM signal goes high.

The main control loop can be understood by following the operation of converter 1. The start of each oscillator cycle sets the SR latch, A3, and turns on power switch Q1. The signal at the noninverting input (SLOPE node) of the PWM comparator A2 is proportional to the sum of the switch current and oscillator ramp. When SLOPE exceeds VC1 (the output of the error amplifier A1), A2 resets the latch and turns off the power switch Q1 through A4 and A5. In this manner, A10 and A2 set the correct peak current level to keep the output in regulation. Amplifier A8 has two noninverting inputs, one from the 1V internal voltage reference and the other one from the CTRL1 pin. Whichever input is lower takes precedence. A8, Q3 and R1 force V1, the voltage across R1, to be one tenth of either 1V or the voltage of CTRL1 pin, whichever is lower. V_{SENSE} is the voltage across the sensing resistor, R_{SENSE}, which is connected in series with the LEDs. V_{SENSE} is compared to V1 by A1. If V_{SENSE} is higher than V1, the output of A1 will decrease, thus reducing the amount of current delivered to LEDs. In this manner the current sensing voltage V_{SENSE} is regulated to V1.

Converters 2 and 3 are identical to converter 1.

PWM Dimming Control

LED1 can be dimmed with pulse width modulation using the PWM1 pin and an external P-channel MOSFET, M1. If the PWM1 pin is pulled high, M1 is turned on by internal driver A7 and converter 1 operates nominally. A7 limits CAP1-TG1 to 6.5V to protect the gate of M1. If the PWM1 pin is pulled low, Q1 is turned off. Converter 1 stops operating, M1 is turned off, disconnects LED1 and stops current draw from output capacitor C2. The VC1 pin is also disconnected from the internal circuitry and draws minimal current from the compensation capacitor C_C. The VC1 pin and the output capacitor store the state of the LED1 current until PWM1 is pulled up again. This leads to a highly linear relationship between pulse width and output light, and allows for a large and accurate dimming range. A P-channel MOSFET with smaller total gate charge (Q_G) improves the dimming performance, since it can be turned on and off faster. Use a MOSFET with a Q_G lower than 10nC, and a minimum V_{TH} of –1V to –2V. Don't use a Low V_{TH} PMOS. To optimize the PWM control of all the three channels, the rising edge of all the three PWM signals should be synchronized.

In the applications where high dimming ratio is not required, M1 can be omitted to reduce cost. In these conditions, TG1 should be left open. The PWM dimming range can be further increased by using CTRL1 pin to linearly adjust the current sense threshold during the PWM1 high state.

Loop Compensation

Loop compensation determines the stability and transient performance. The LT3496 uses current mode control to regulate the output, which simplifies loop compensation. To compensate the feedback loop of the LT3496, a series resistor-capacitor network should be connected from the VC pin to GND. For most applications, the compensation capacitor should be in the range of 100pF to 1nF. The compensation resistor is usually in the range of 5k to 50k.

To obtain the best performance, tradeoffs should be made in the compensation network design. A higher value of compensation capacitor improves the stability and dimming range (a larger capacitance helps hold the VC voltage when the PWM signal is low). However, a large compensation capacitor also increases the start-up time and the time to recover from a fault condition. Similarly, a larger compensation resistor improves the transient response but may reduce the phase margin. A practical approach is to start with one of the circuits in this data sheet that is similar to your application and tune the compensation network to optimize the performance. The stability, PWM

APPLICATIONS INFORMATION

dimming waveforms and the start-up time should be checked across all operating conditions.

Open-LED Protection

The LT3496 has open-LED protection for all the three converters. As shown in Figure 1, the OVP1 pin receives the output voltage (the voltage across the output capacitor) feedback signal from an external resistor divider. OVP1 voltage is compared with a 1V internal voltage reference by comparator A6. In the event the LED string is disconnected or fails open, converter 1 output voltage will increase, causing OVP1 voltage to increase. When OVP1 voltage exceeds 1V, the power switch Q1 will turn off, and cause the output voltage to decrease. Eventually, OVP1 will be regulated to 1V and the output voltage will be limited. In the event one of the converters has an open-LED protection, the other converters will continue functioning properly.

Switching Frequency and Soft-Start

The LT3496 switching frequency is controlled by f_{ADJ} pin voltage. Setting f_{ADJ} voltage to be less than 1V will reduce switching frequency.

If f_{ADJ} voltage is higher than 1V, the default switching frequency is 2.1MHz. In general, a lower switching frequency should be used where either very high or very low switch duty cycle is required or higher efficiency is desired. Selection of a higher switching frequency will allow use of low value external components and yield a smaller solution size and profile.

Connecting f_{ADJ} pin to a lowpass filter (R5 and C4 in Figure 1) from the REF pin provides a soft-start function. During start-up, f_{ADJ} voltage increases slowly from 0V to the setting voltage. As a result, the switching frequency increases slowly to the setting frequency. This function limits the inrush current during start-up.

Undervoltage Lockout

The LT3496 has an undervoltage lockout circuit that shuts down all the three converters when the input voltage drops below 2.4V. This prevents the converter from switching in an erratic mode when powered from a low supply voltage.

Input Capacitor Selection

For proper operation, it is necessary to place a bypass capacitor to GND close to the V_{IN} pin of the LT3496. A 1µF or greater capacitor with low ESR should be used. A ceramic capacitor is usually the best choice.

In the buck mode configuration, the capacitor at PV_{IN} has large pulsed currents due to the current returned though the Schottky diode when the switch is off. For the best reliability, this capacitor should have low ESR and ESL and have an adequate ripple current rating. The RMS input current is:

$$I_{IN(RMS)} = I_{LED} \bullet \sqrt{(1-D) \bullet D}$$

where D is the switch duty cycle. A 1µF ceramic type capacitor placed close to the Schottky diode and the ground plane is usually sufficient for each channel.

Output Capacitor Selection

The selection of output filter capacitor depends on the load and converter configuration, i.e., step-up or step-down. For LED applications, the equivalent resistance of the LED is typically low, and the output filter capacitor should be large enough to attenuate the current ripple.

To achieve the same LED ripple current, the required filter capacitor value is larger in the boost and buck-boost mode applications than that in the buck mode applications. For the LED buck mode applications, a 0.22µF ceramic capacitor is usually sufficient for each channel. For the LED boost and buck-boost applications, a 1µF ceramic capacitor is usually sufficient for each channel. If higher LED current ripple can be tolerated, a lower output capacitance can be selected to reduce the capacitor's cost and size.

Use only ceramic capacitors with X7R or X5R dielectric, as they are good for temperature and DC bias stability of the capacitor value. All ceramic capacitors exhibit loss of capacitance value with increasing DC voltage bias, so it may be necessary to choose a higher value capacitor to get the required capacitance at the operation voltage. Always check that the voltage rating of the capacitor is sufficient. Table 1 shows some recommended capacitor vendors.

APPLICATIONS INFORMATION

Table 1. Ceramic Capacitor Manufacturers

VENDOR	TYPE	SERIES
Taiyo Yuden	Ceramic	X5R, X7R
AVX	Ceramic	X5R, X7R
Murata	Ceramic	X5R, X7R
Kemet	Ceramic	X5R, X7R

Inductor Selection

Several inductors that work well with the LT3496 are listed in Table 2. However, there are many other manufacturers and devices that can be used. Consult each manufacturer for more detailed information and their entire range of parts. Ferrite core inductors should be used to obtain the best efficiency. Choose an inductor that can handle the necessary peak current without saturating, and ensure that the inductor has a low DCR (copper-wire resistance) to minimize I^2R power losses. An inductor with a magnetic shield should be used to prevent noise radiation and cross coupling among the three channels.

Diode Selection

The Schottky diode conducts current during the interval when the switch is turned off. Select a diode V_R rated for the maximum SW voltage. It is not necessary that the forward current rating of the diode equal the switch current limit. The average current, I_F, through the diode is a function of the switch duty cycle. Select a diode with forward current rating of:

$$I_F = I_L \bullet (1 - D)$$

where I_L is the inductor current.

If using the PWM feature for dimming, it is important to consider diode leakage, which increases with the temperature from the output during the PWM low interval. Therefore, choose the Schottky diode with sufficient low leakage current. Table 3 shows several Schottky diodes that work well with the LT3496.

Table 2. Surface Mount Inductors

PART NUMBER	VALUE (µH)	DCR (Ω MAX)	I_{RMS} (A)	SIZE W × L × H (mm3)
Sumida				
CMD4D06	2.2	0.116	0.95	3.5 × 4.3 × 0.8
	3.3	0.174	0.77	
CDRH3D16	2.2	0.072	1.20	3.8 × 3.8 × 1.8
	3.3	0.085	1.10	
	4.7	0.105	0.90	
CDRH4D28	10	0.128	1.00	5.0 × 5.0 × 3.0
	15	0.149	0.76	
CDRH5D28	22	0.122	0.9	6.0 × 6.0 × 3.0
	33	0.189	0.75	
CooperET				
SD3112	2.2	0.140	0.97	3.1 × 3.1 × 1.2
	3.3	0.165	0.90	
	4.7	0.246	0.74	
SD14	10	0.2058	1.1	5.0 × 5.0 × 1.4
SD20	15	0.1655	1.25	5.0 × 5.0 × 2.0
	22	0.2053	1.12	
SD25	33	0.2149	1.11	5.0 × 5.0 × 2.5
Taiyo Yuden				
NR3015	2.2	0.06	1.48	3.0 × 3.0 × 1.5
	4.7	0.12	1.02	
NP04SZB	4.7	0.075	1.6	4.0 × 4.0 × 1.8
	10	0.100	1.2	
	15	0.180	0.95	
	22	0.210	0.77	

Table 3. Schottky Diodes

PART NUMBER	V_R (V)	I_F (A)	PACKAGE
ZETEX			
ZLLS350	40	0.38	SOD523
ZLLS400	40	0.52	SOD323

APPLICATIONS INFORMATION

Programming the LED Current

The LED current of each channel is programmed by connecting an external sense resistor R_{SENSE} in series with the LED load, and setting the voltage regulation threshold across that sense resistor using CTRL input. If the CTRL voltage, V_{CTRL}, is less than 1V, the LED current is:

$$I_{LED} = \frac{V_{CTRL}}{10 \bullet R_{SENSE}}$$

If V_{CTRL} is higher than 1V, the LED current is:

$$I_{LED} = \frac{100mV}{R_{SENSE}}$$

The CTRL pins should not be left open. The CTRL pin can also be used in conjunction with a PTC thermistor to provide overtemperature protection for the LED load as shown in Figure 2.

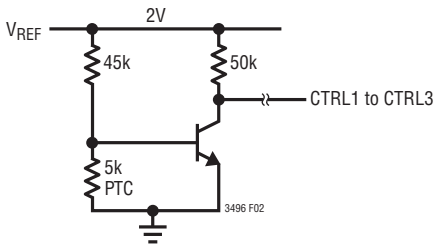

Figure 2

Thermal Considerations

The LT3496 is rated to a maximum input voltage of 30V for continuous operation, and 40V for nonrepetitive one second transients. Careful attention must be paid to the internal power dissipation of the LT3496 at higher input voltages to ensure that a junction temperature of 125°C is not exceeded. This is especially important when operating at high ambient temperatures. The exposed pad on the bottom of the package must be soldered to a ground plane. This ground should then be connected to an internal copper ground plane with thermal vias placed directly under the package to spread out the heat dissipated by the LT3496.

Board Layout

The high speed operation of the LT3496 demands careful attention to board layout and component placement. The exposed pad of the package is the only GND terminal of the IC and is important for thermal management of the IC. Therefore, it is crucial to achieve a good electrical and thermal contact between the exposed pad and the ground plane of the board. Also, in boost configuration, the Schottky rectifier and the capacitor between GND and the cathode of the Schottky are in the high frequency switching path where current flow is discontinuous. These elements should be placed so as to minimize the path between SW and the GND of the IC. To reduce electromagnetic interference (EMI), it is important to minimize the area of the SW node. Use the GND plane under SW to minimize interplane coupling to sensitive signals. To obtain good current regulation accuracy and eliminate sources of channel to channel coupling, the CAP and LED inputs of each channel of the LT3496 should be run as separate lines back to the terminals of the sense resistor. Any resistance in series with CAP and LED inputs should be minimized. Finally, the bypass capacitor on the V_{IN} supply to the LT3496 should be placed as close as possible to the V_{IN} terminal of the device.

TYPICAL APPLICATIONS

Minimum BOM Buck Mode LED Driver

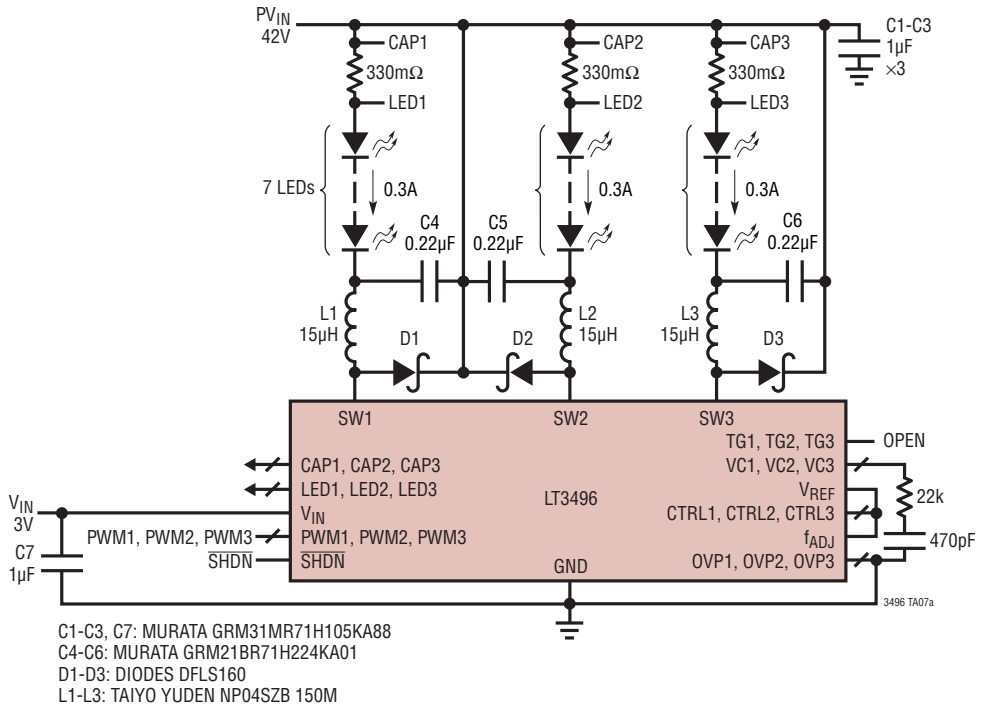

C1-C3, C7: MURATA GRM31MR71H105KA88
C4-C6: MURATA GRM21BR71H224KA01
D1-D3: DIODES DFLS160
L1-L3: TAIYO YUDEN NP04SZB 150M

300:1 PWM Dimming at 120Hz

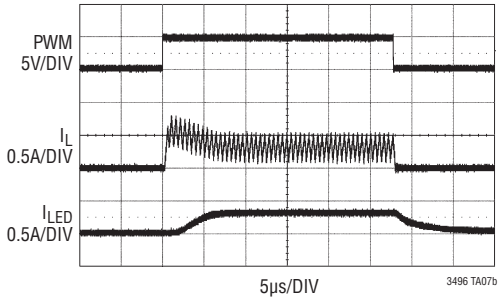

Efficiency

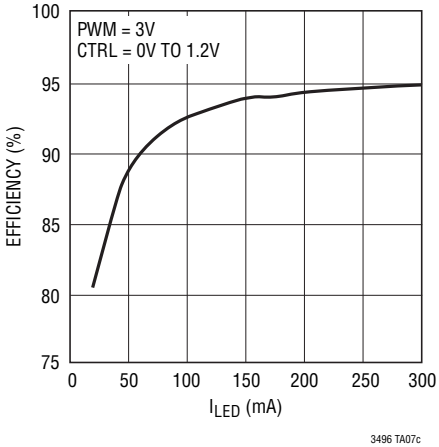

TYPICAL APPLICATIONS

Triple Boost 100mA × 10 LED Driver

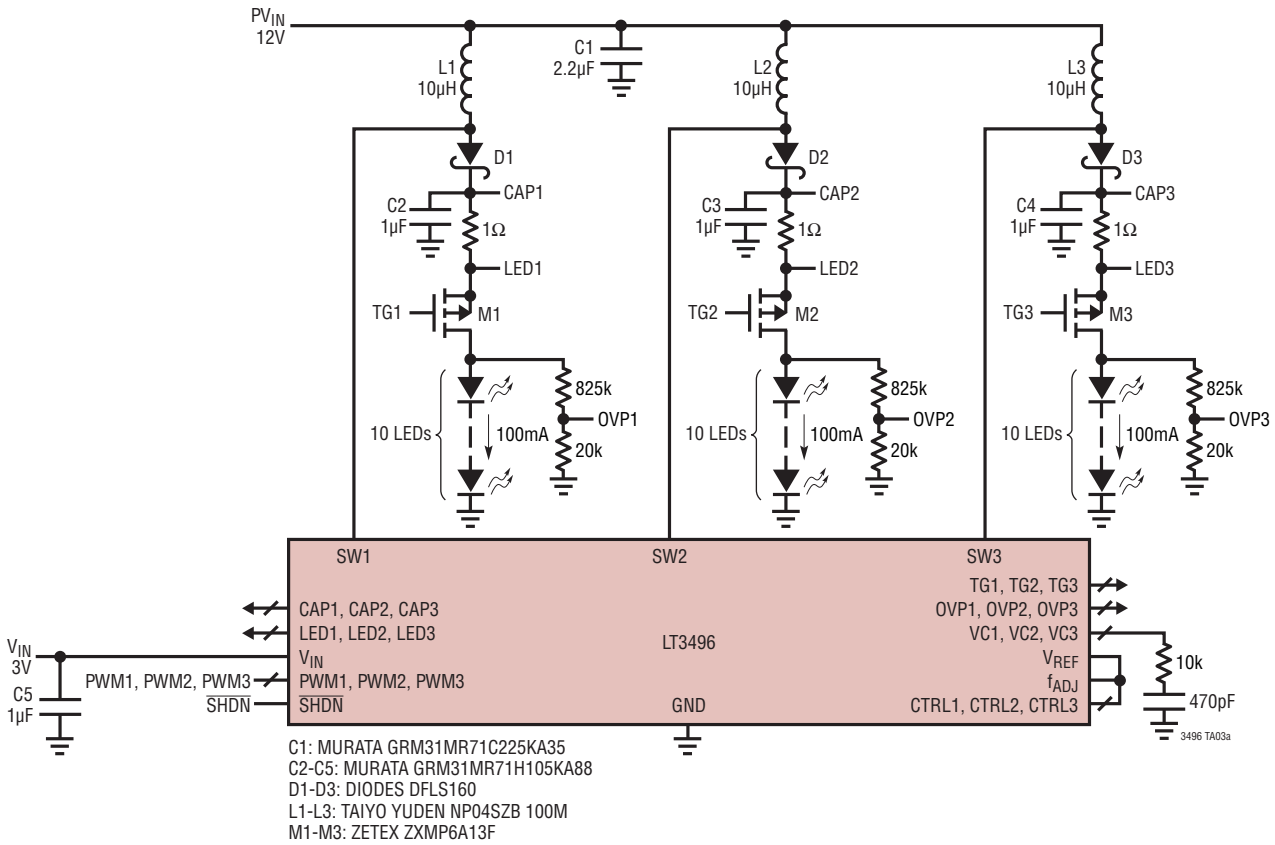

C1: MURATA GRM31MR71C225KA35
C2-C5: MURATA GRM31MR71H105KA88
D1-D3: DIODES DFLS160
L1-L3: TAIYO YUDEN NP04SZB 100M
M1-M3: ZETEX ZXMP6A13F

3000:1 PWM Dimming at 120Hz

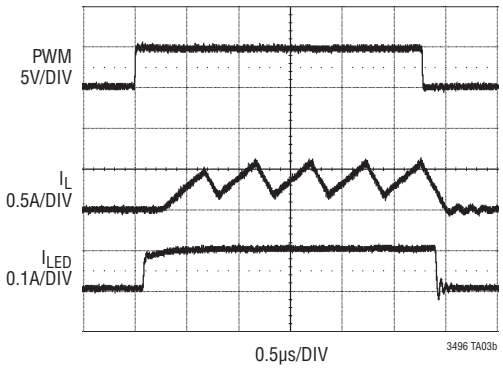

Efficiency vs PWM Duty Cycle

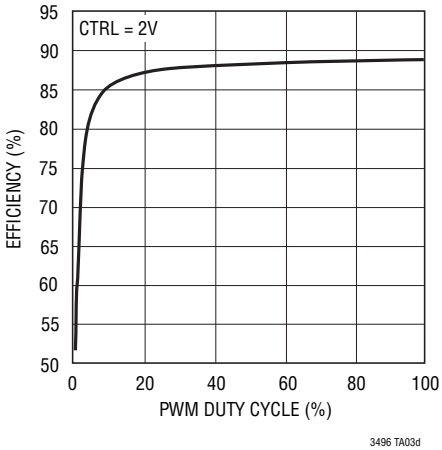

TYPICAL APPLICATIONS

Dual Boost LED Driver

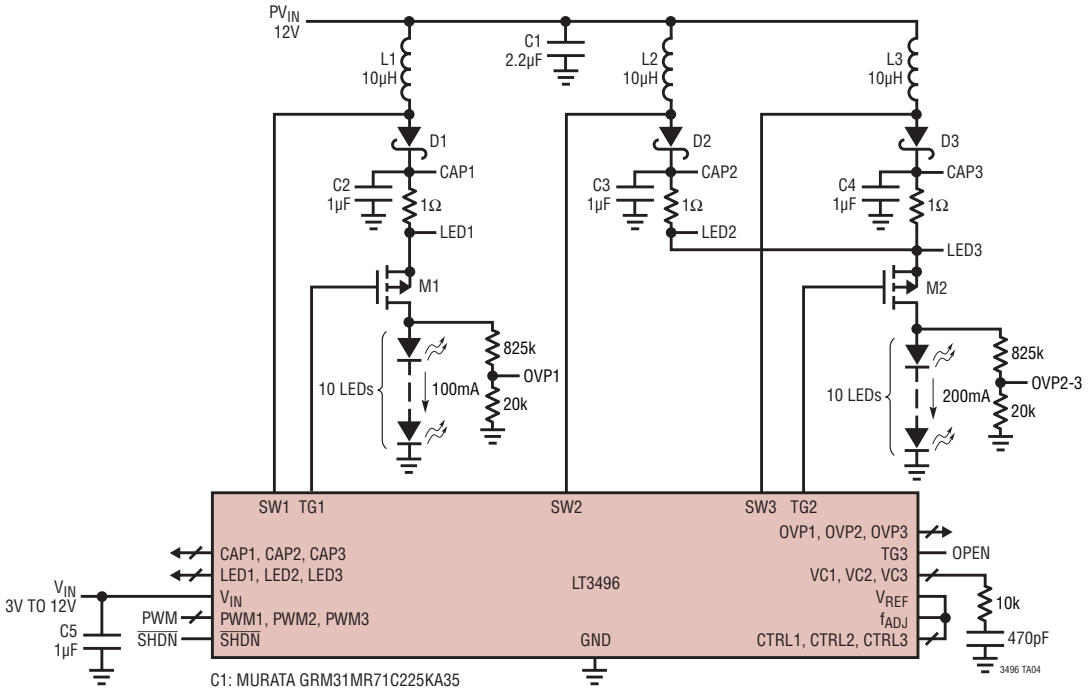

C1: MURATA GRM31MR71C225KA35
C2-C5: MURATA GRM31MR71H105KA88
D1-D3: DIODES DFLS160
L1-L3: TAIYO YUDEN NP04SZB 100M
M1, M2: ZETEX ZXMP6A13F

Triple Boost 20mA × 8 LED Driver

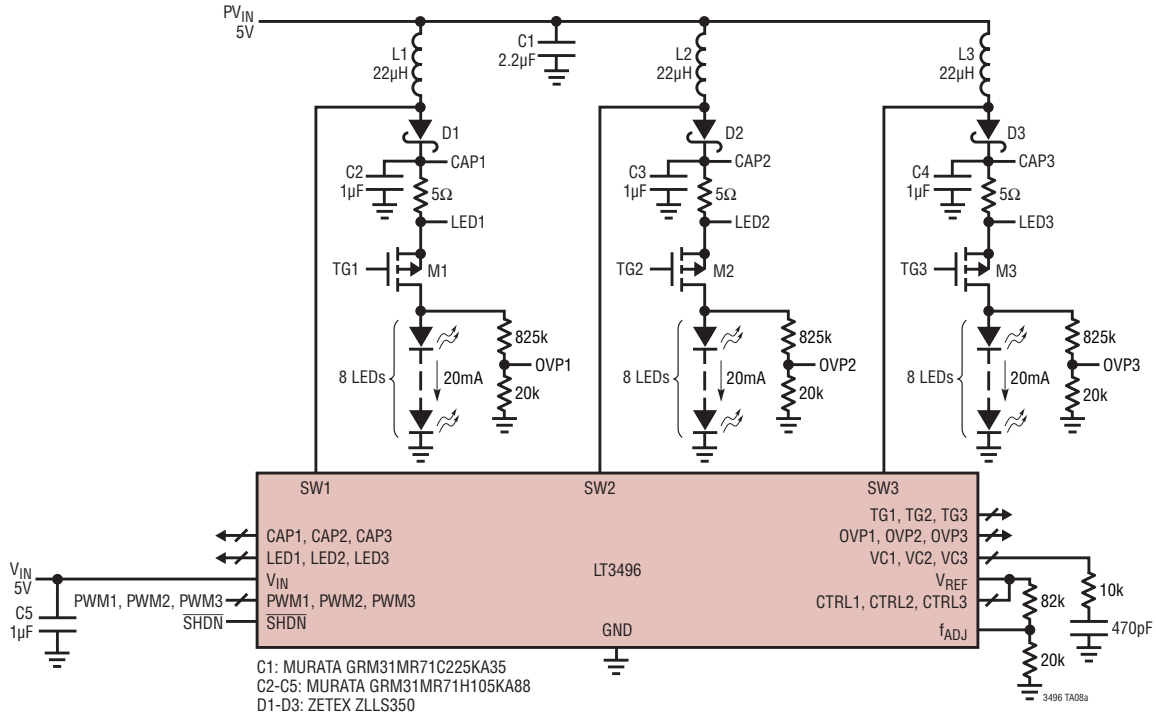

C1: MURATA GRM31MR71C225KA35
C2-C5: MURATA GRM31MR71H105KA88
D1-D3: ZETEX ZLLS350
L1-L3: TAIYO YUDEN NP04SZB 220M
M1-M3: ZETEX ZXMP6A13F

TYPICAL APPLICATIONS

Buck-Boost Mode 300mA × 6 LED Driver

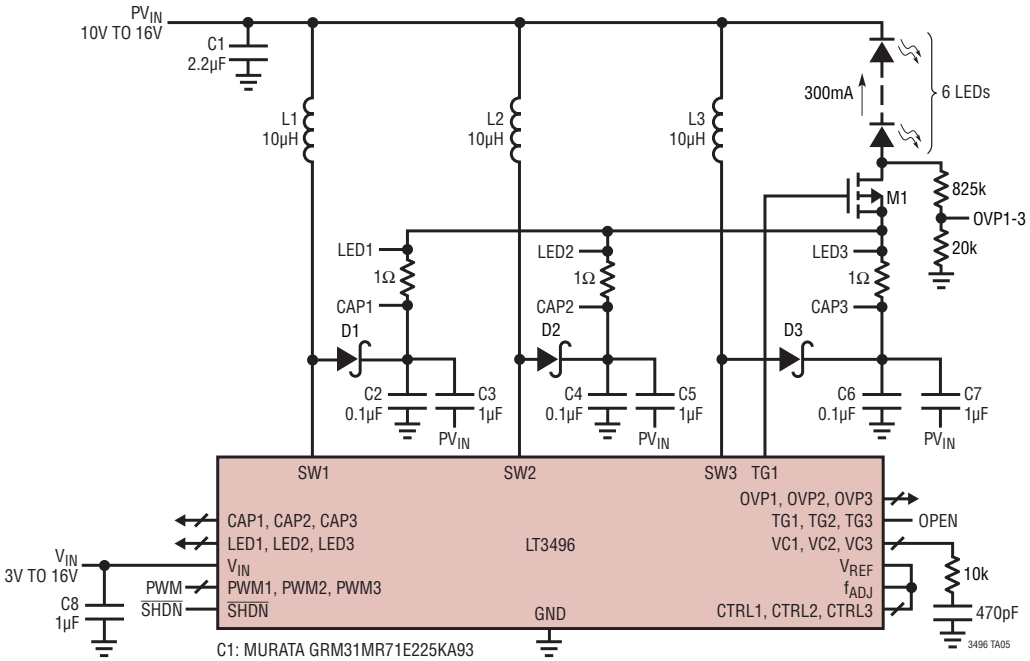

C1: MURATA GRM31MR71E225KA93
C2, C4, C6: MURATA GRM21BR71H104KA01B
C3, C5, C7: MURATA GRM31MR71H105KA88
C8: MURATA GRM31MR71E105KA93
D1-D3: DIODES DFLS160
L1-L3: TAIYO YUDEN NP04SZB 100M
M1: ZETEX ZXMP6A13F

Triple Buck Mode LED Driver with Open LED Protection

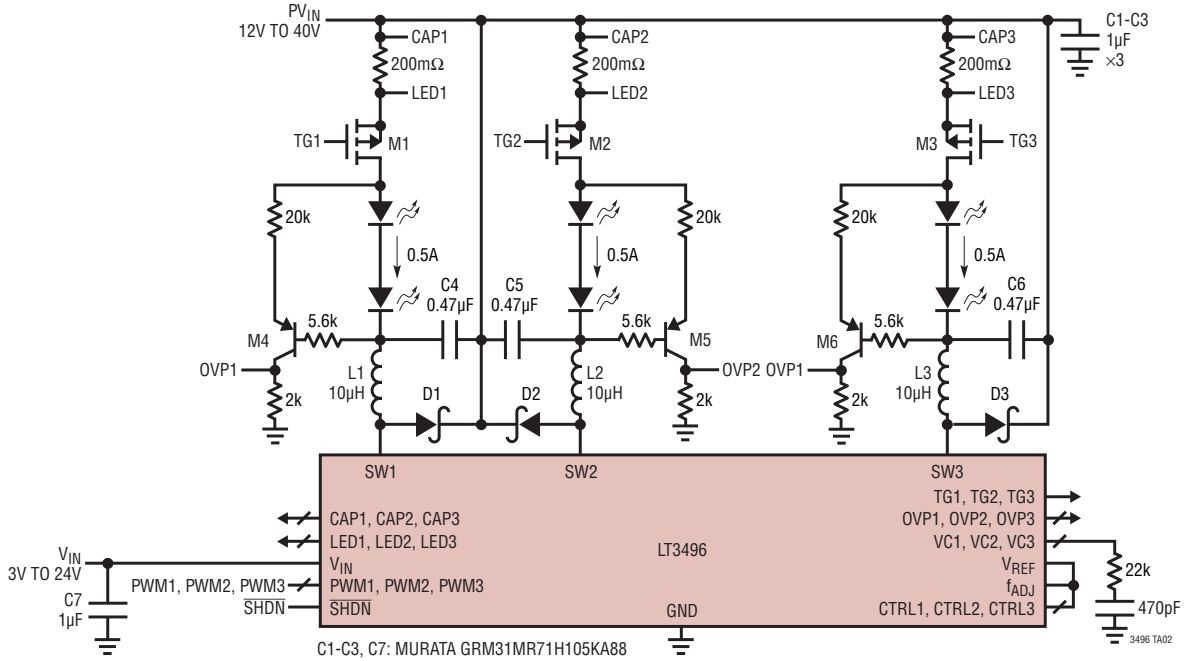

C1-C3, C7: MURATA GRM31MR71H105KA88
C4-C6: MURATA GRM188R71C474KA88
D1-D3: DIODES DFLS160
L1-L3: TAIYO YUDEN NP04SZB 100M
M1-M3: ZETEX ZXMP6A13F
M4-M6: PHILIPS BC858B

PACKAGE DESCRIPTION

FE Package
28-Lead Plastic TSSOP (4.4mm)
(Reference LTC DWG # 05-08-1663)
exposed pad Variation EB

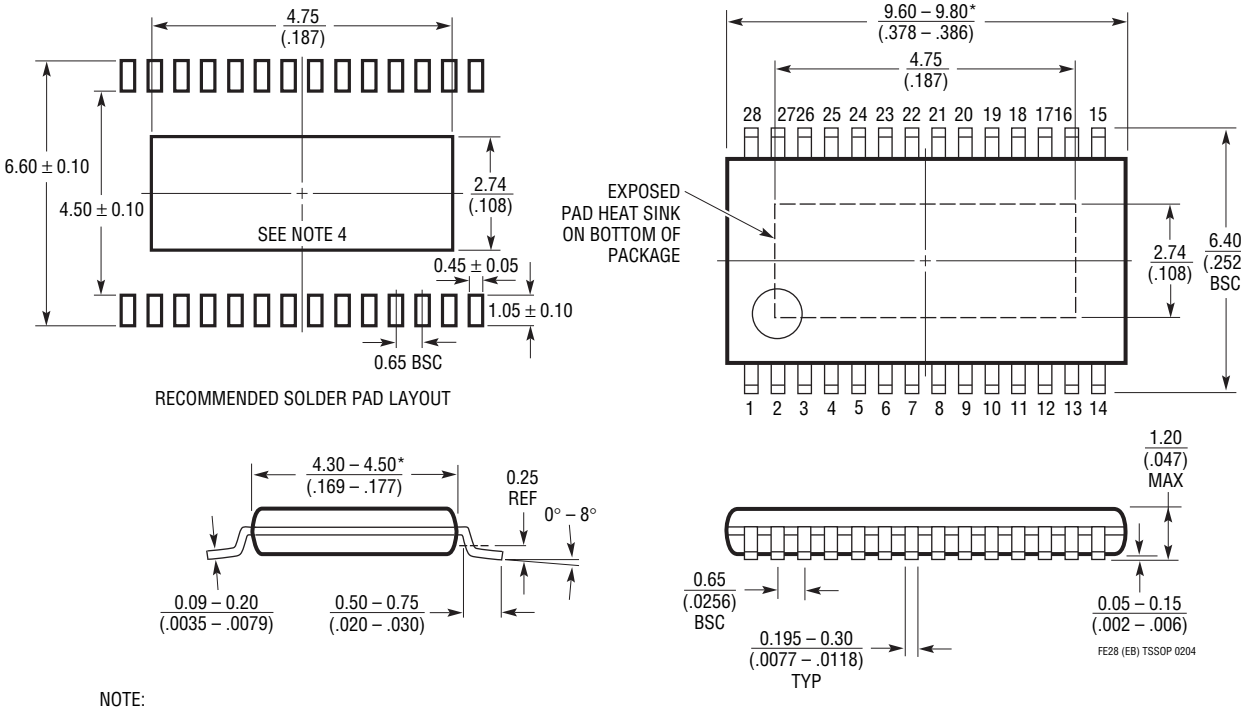

NOTE:
1. CONTROLLING DIMENSION: MILLIMETERS
2. DIMENSIONS ARE IN MILLIMETERS (INCHES)
3. DRAWING NOT TO SCALE
4. RECOMMENDED MINIMUM PCB METAL SIZE FOR EXPOSED PAD ATTACHMENT
*DIMENSIONS DO NOT INCLUDE MOLD FLASH. MOLD FLASH SHALL NOT EXCEED 0.150mm (.006") PER SIDE

PACKAGE DESCRIPTION

UFD Package
28-Lead Plastic QFN (4mm × 5mm)
(Reference LTC DWG # 05-08-1712 Rev B)

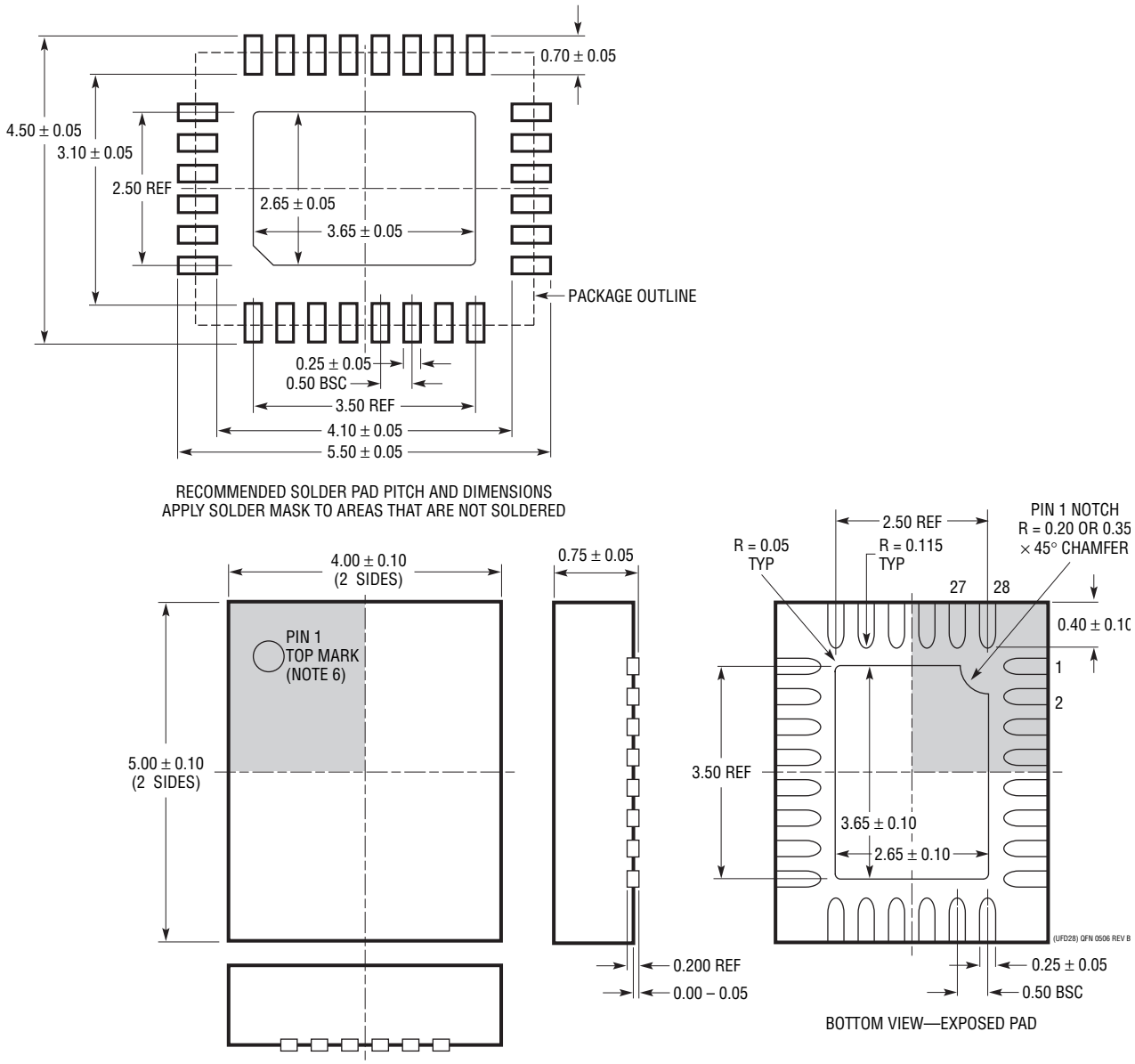

NOTE:
1. DRAWING PROPOSED TO BE MADE A JEDEC PACKAGE OUTLINE MO-220 VARIATION (WXXX-X).
2. DRAWING NOT TO SCALE
3. ALL DIMENSIONS ARE IN MILLIMETERS
4. DIMENSIONS OF EXPOSED PAD ON BOTTOM OF PACKAGE DO NOT INCLUDE
   MOLD FLASH. MOLD FLASH, IF PRESENT, SHALL NOT EXCEED 0.15mm ON ANY SIDE
5. EXPOSED PAD SHALL BE SOLDER PLATED
6. SHADED AREA IS ONLY A REFERENCE FOR PIN 1 LOCATION
   ON THE TOP AND BOTTOM OF PACKAGE

REVISION HISTORY (Revision history begins at Rev F)

REV	DATE	DESCRIPTION	PAGE NUMBER
F	4/10	Added H-Grade and Revised Entire Data Sheet	1 through 20

Information furnished by Linear Technology Corporation is believed to be accurate and reliable. However, no responsibility is assumed for its use. Linear Technology Corporation makes no representation that the interconnection of its circuits as described herein will not infringe on existing patent rights.

TYPICAL APPLICATION

Triple Buck-Boost Mode 100mA × 6 LED Driver

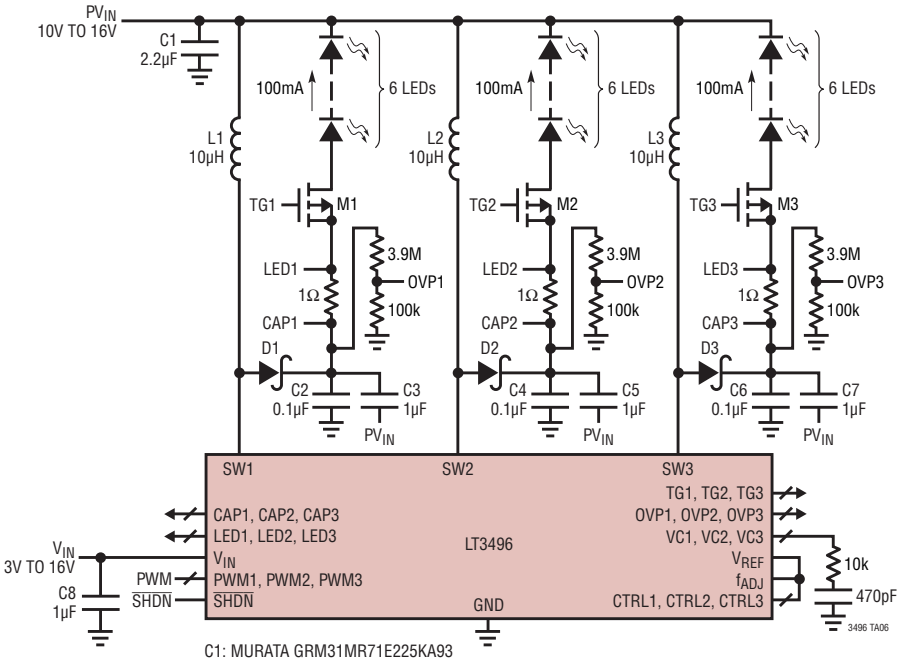

C1: MURATA GRM31MR71E225KA93
C2, C4, C6: MURATA GRM21BR71H104KA01B
C3, C5, C7: MURATA GRM31MR71H105KA88
C8: MURATA GRM31MR71E105KA93
D1-D3: DIODES DFLS160
L1-L3: TAIYO YUDEN NP04SZB 100M
M1-M3: ZETEX ZXMP6A13F

3000:1 PWM Dimming at 120Hz

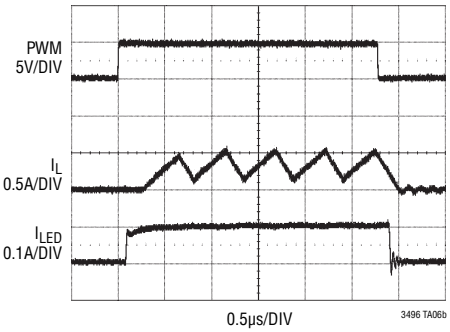

RELATED PARTS

PART NUMBER	DESCRIPTION	COMMENTS
LT1618	Constant Current, 1.4MHz, 1.5A Boost Converter	V_{IN}: 1.6V to 18V, $V_{OUT(MAX)}$ = 36V, I_Q = 1.8mA, I_{SD} < 1µA, 10-Pin MS Package
LT3453	1MHz, 800mA Synchronous Buck-Boost High Power LED Driver	V_{IN}: 2.7V to 5.5V, $V_{OUT(MAX)}$ = 5.5V, I_Q = 2.5mA, I_{SD} < 6µA, QFN Package
LT3466	Dual Constant Current, 2MHz, High Efficiency White LED Boost Regulator with Integrated Schottky Diode	V_{IN}: 2.7V to 24V, $V_{OUT(MAX)}$ = 40V, I_Q = 5mA, I_{SD} < 16µA, DFN Package
LT3467/LT3467A	1.1A (ISW), 1.3MHz/2.1MHz, High Efficiency Step-Up DC/DC Converters with Integrated Soft-Start	V_{IN}: 2.4V to 16V, $V_{OUT(MAX)}$ = 40V, I_Q = 1.2mA, I_{SD} < 1µA, ThinSOT™ Package
LT3474	Step-Down 1A 2MHz LED Driver	V_{IN}: 4V to 36V, $V_{OUT(MAX)}$ = 15V, I_Q = 2.6mA, I_{SD} < 1µA, TSSOP Package
LT3475	Dual Step-Down 1.5A, 2mV LED Driver	V_{IN}: 4V to 36V, I_Q = 6mA, I_{SD} < 1µA, 20-Lead TSSOPE Package
LT3476	High Current 2MHz Quad 1.5A Output LED Driver	V_{IN}: 2.8V to 16V, $V_{OUT(MAX)}$ = 33.5V, I_Q = 5.5mA, I_{SD} < 1µA, 38-Lead 5mm × 7mm QFN Package
LT3477	3A, 42V, 3MHz Step-Up Regulator with Dual Rail-to-Rail Current Sense	V_{IN}: 2.5V to 2.5V, $V_{OUT(MAX)}$ = 40V, I_Q = 5mA, I_{SD} < 1µA, QFN, 16-Pin TSSOPE Packages
LT3478/LT3478-1	4.5A, 2.25MHz LED Driver with 3000:1 Ture Color PWM™ Dimming	V_{IN}: 2.8V to 36V, $V_{OUT(MAX)}$ = 40V, I_Q = 6.1mA, I_{SD} < 3µA, 16-Pin TSSOPE Package
LT3479	3A, Full-Featured DC/DC Converter with Soft-Start and Inrush Current Protection	V_{IN}: 2.5V to 24V, $V_{OUT(MAX)}$ = 40V, I_Q = 6.5mA, I_{SD} < 1µA, DFN, TSSOP Packages

Linear Technology Corporation
1630 McCarthy Blvd., Milpitas, CA 95035-7417
(408) 432-1900 • FAX: (408) 434-0507 • www.linear.com
LT 0510 REV F • PRINTED IN USA
© LINEAR TECHNOLOGY CORPORATION 2007