Inverting Micropower DC/DC Converter with Schottky

FEATURES

- **Internal 40V Schottky Diode**
- **One Resistor Feedback (Other Resistor Inside)**
- **Internal 40V, 200mA Power Switch**
- **Generates Regulated Negative Outputs to –38V**
- Low Quiescent Current:
  40µA in Active Mode
  <1µA in Shutdown Mode
- Low V_{CESAT} Switch: 200mV at 150mA
- Wide Input Range: 2.5V to 16V
- Uses Small Surface Mount Components
- Output Short-Circuit Protected
- Available in a 6-Lead SOT-23 and Low Profile 8-Lead DFN (2mm × 2mm × 0.75mm) Packages

APPLICATIONS

- LCD Bias
- Handheld Computers
- Battery Backup
- Digital Cameras
- OLED Bias

DESCRIPTION

The LT®3483 is a micropower inverting DC/DC converter with integrated Schottky and one resistor feedback. The small package size, high level of integration and use of tiny surface mount components yield a solution size as small as 40mm^2. The device features a quiescent current of only 40µA at no load, which further reduces to 0.1µA in shutdown. A current limited, fixed off-time control scheme conserves operating current, resulting in high efficiency over a broad range of load current. A precisely trimmed 10µA feedback current enables one resistor feedback and virtually eliminates feedback loading of the output. The 40V switch enables voltage outputs up to –38V to be generated without the use of costly transformers. The LT3483's low 300ns off-time permits the use of tiny low profile inductors and capacitors to minimize footprint and cost in space-conscious portable applications.

The LT3483 is available in the low profile (1mm) SOT-23 (ThinSOT™) and 8-lead DFN (2mm × 2mm × 0.75mm) packages.

LT, LTC and LTM are registered trademarks of Linear Technology Corporation. ThinSOT is a trademark of Linear Technology Corporation. All other trademarks are the property of their respective owners. Patent Pending

TYPICAL APPLICATION

3.6V to –8V DC/DC Converter

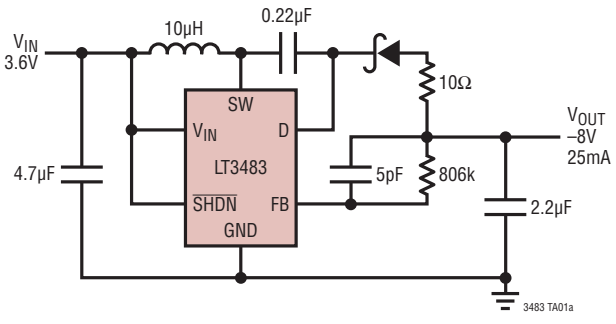

Efficiency and Power Loss

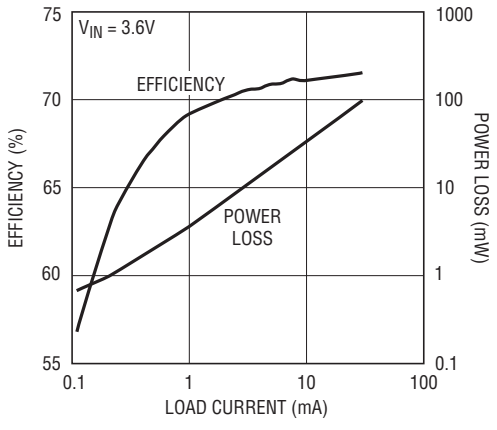

ABSOLUTE MAXIMUM RATINGS

(Note 1)

V_{IN} Voltage 16V
SW Voltage 40V
D Voltage ..... –40V
FB Voltage 2.5V
$\overline{SHDN}$ Voltage 16V

Operating Ambient Temperature Range (Note 2)
LT3483E ..... –40°C to 85°C
LT3483I ..... –40°C to 125°C
Junction Temperature ..... 125°C
Storage Temperature Range ..... –65°C to 150°C
Lead Temperature (Soldering, 10 sec)
(TSOT-23 Package Only) ..... 300°C

PIN CONFIGURATION

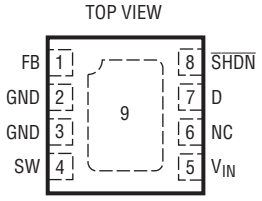

DC PACKAGE
8-LEAD (2mm × 2mm) PLASTIC DFN
T_{JMAX} = 125°C, θ_{JA} = 121°C/W
EXPOSED PAD (PIN 9) IS GND

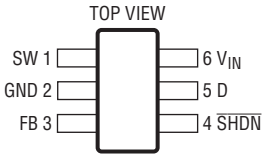

S6 PACKAGE
6-LEAD PLASTIC TSOT-23
T_{JMAX} = 125°C, θ_{JA} = 256°C/W IN FREE AIR
θ_{JA} = 120°C/W ON BOARD OVER GROUND PLANE

ORDER INFORMATION

LEAD FREE FINISH	TAPE AND REEL	PART MARKING	PACKAGE DESCRIPTION	TEMPERATURE RANGE
LT3483EDC#PBF	LT3483EDC#TRPBF	LCYT	8-Lead (2mm × 2mm) Plastic DFN	–40°C to 85°C
LT3483ES6#PBF	LT3483ES6#TRPBF	LTBKX	6-Lead Plastic TSOT-23	–40°C to 85°C
LT3483IDC#PBF	LT3483IDC#TRPBF	LCYT	8-Lead (2mm × 2mm) Plastic DFN	–40°C to 125°C
LT3483IS6#PBF	LT3483IS6#TRPBF	LTBKX	6-Lead Plastic TSOT-23	–40°C to 125°C
LEAD BASED FINISH	**TAPE AND REEL**	**PART MARKING**	**PACKAGE DESCRIPTION**	**TEMPERATURE RANGE**
LT3483EDC	LT3483EDC#TR	LCYT	8-Lead (2mm × 2mm) Plastic DFN	–40°C to 85°C
LT3483ES6	LT3483ES6#TR	LTBKX	6-Lead Plastic TSOT-23	–40°C to 85°C

Consult LTC Marketing for parts specified with wider operating temperature ranges. Consult LTC Marketing for information on non-standard lead based finish parts.

For more information on lead free part marking, go to: http://www.linear.com/leadfree/
For more information on tape and reel specifications, go to: http://www.linear.com/tapeandreel/

ELECTRICAL CHARACTERISTICS

The ● denotes the specifications which apply over the full operating temperature range, otherwise specifications are at T_A = 25°C. V_{IN} = 3.6V, $V_{\overline{SHDN}}$ = 3.6V unless otherwise specified.

PARAMETER	CONDITIONS		MIN	TYP	MAX	UNITS
V_{IN} Operating Range			2.5		16	V
V_{IN} Undervoltage Lockout				2	2.4	V
FB Comparator Trip Voltage to GND (V_{FB})	FB Falling	●	0	5	12	mV
FB Output Current (Note 3)	FB = V_{FB} – 5mV	●	–10.2	–10	–9.7	µA
FB Comparator Hysteresis	FB Rising			10		mV
Quiescent Current in Shutdown	$V_{\overline{SHDN}}$ = GND				1	µA
Quiescent Current (Not Switching)	FB = –0.05V			40	50	µA
I_{FB} Line Regulation	2.5V ≤ V_{IN} ≤ 16V				0.07	%/V
Switch Off-Time				300		ns
Switch Current Limit			170	200	230	mA
Switch V_{CESAT}	I_{SW} = 150mA to GND			200		mV
Switch Leakage Current	SW = 40V				1	µA
Rectifier Leakage Current	D = –40V				4	µA
Rectifier Forward Drop	I_D = 150mA to GND			0.64		V
SHDN Input Low Voltage					0.4	V
SHDN Input High Voltage			1.5			V
SHDN Pin Current				6	10	µA

Note 1: Stresses beyond those listed under Absolute Maximum Ratings may cause permanent damage to the device. Exposure to any Absolute Maximum Rating condition for extended periods may affect device reliability and lifetime.

Note 2: The LT3483E is guaranteed to meet specifications from 0°C to 85°C. Specifications over the –40°C to 85°C operating temperature range are assured by design, characterization and correlation with statistical process controls. The LT3483I is guaranteed to meet specifications over the –40°C to 125°C operating temperature range.

Note 3: Current flows out of the pin.

TYPICAL PERFORMANCE CHARACTERISTICS

V_{FB} Current

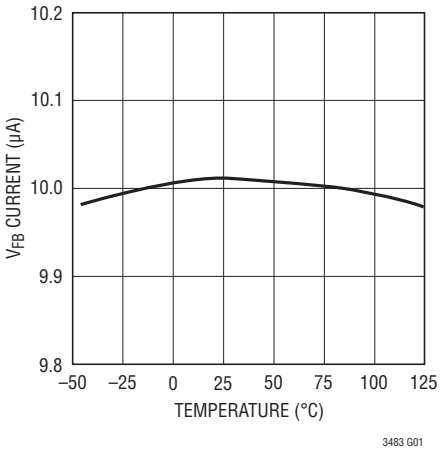

V_{FB} Voltage

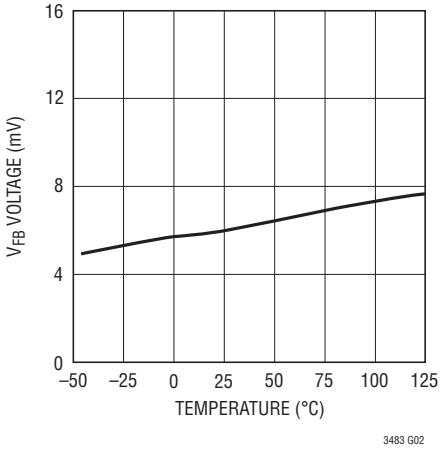

Switch Off Time

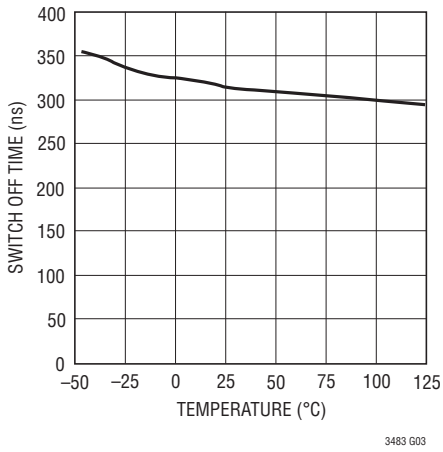

Switch Current Limit

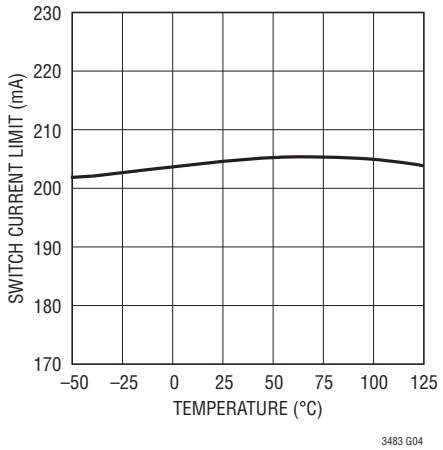

Quiescent Current

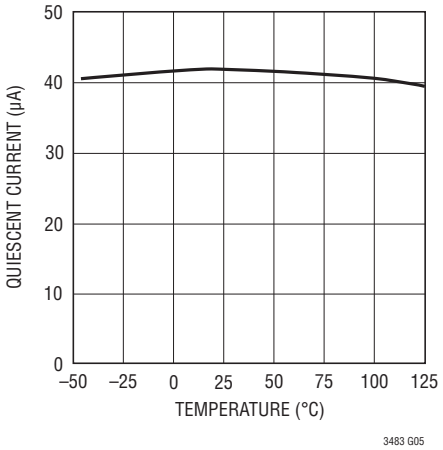

$\overline{SHDN}$ Pin Bias Current

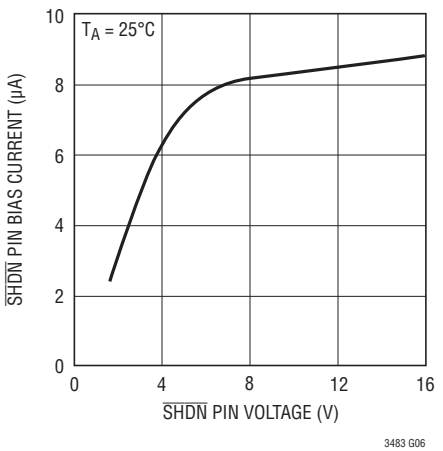

PIN FUNCTIONS (DFN/TSOT-23)

FB (Pin 1/Pin 3): Feedback. Place resistor to negative output here. Set resistor value R1 = V_{OUT}/10µA.

GND (Pins 2, 3/Pin 2): Ground. For DFN package, tie both pin 2 and pin 3 together to ground.

SW (Pin 4/Pin 1): Switch. Connect to external inductor L1 and positive terminal of transfer capacitor.

V_{IN} (Pin 5/Pin 6): Input Supply. Must be locally bypassed with 1µF or greater.

NC (Pin 6/NA): No Connection.

D (Pin 7/Pin 5): Anode Terminal of Integrated Schottky Diode. Connect to negative terminal of transfer capacitor and external inductor L2 (flyback configuration) or to cathode of external Schottky diode (inverting charge pump configuration).

$\overline{SHDN}$ (Pin 8/Pin 4): Shutdown. Connect to GND to turn device off. Connect to supply to turn device on.

Exposed Pad (Pin 9/NA): GND. The exposed pad should be soldered to the PCB ground to achieve the rated thermal performance.

BLOCK DIAGRAM

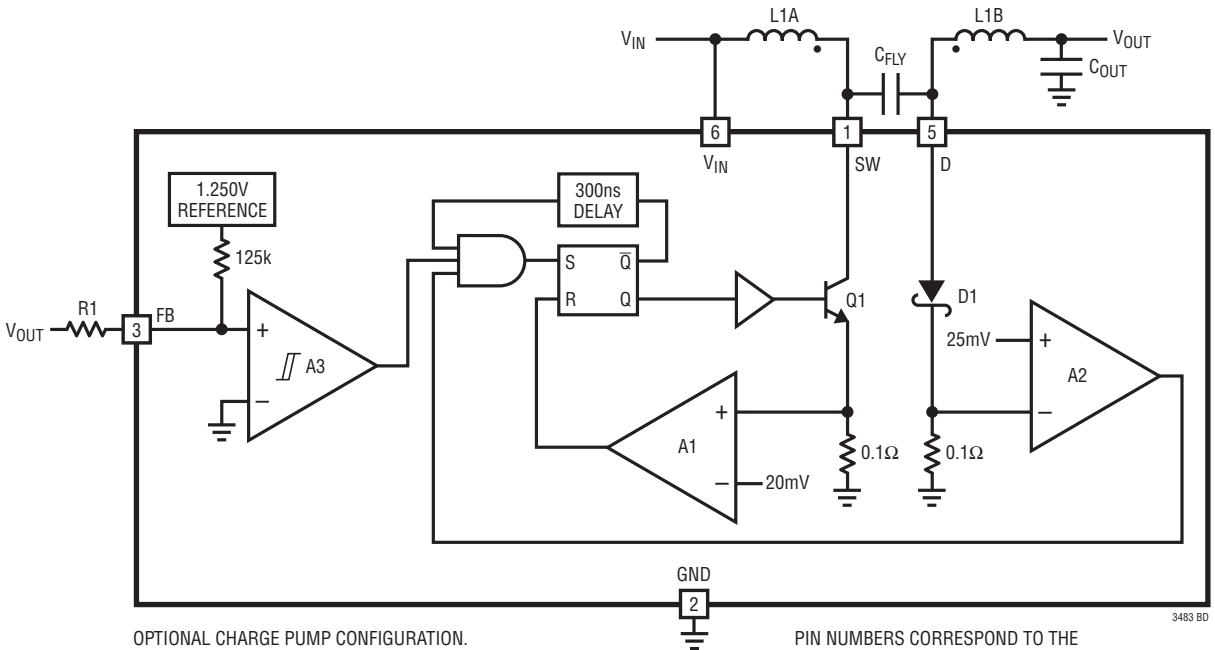

OPTIONAL CHARGE PUMP CONFIGURATION.
L1B REPLACED WITH:



PIN NUMBERS CORRESPOND TO THE 6-PIN TSOT-23 PACKAGE

OPERATION

The LT3483 uses a constant off-time control scheme to provide high efficiency over a wide range of output currents. Operation can be best understood by referring to the Block Diagram. When the voltage at the FB pin is approximately 0V, comparator A3 disables most of the internal circuitry. Output current is then provided by external capacitor C_{OUT}, which slowly discharges until the voltage at the FB pin goes above the hysteresis point of A3. Typical hysteresis at the FB pin is 10mV. A3 then enables the internal circuitry, turns on power switch Q1, and the currents in external inductors L1A and L1B begin to ramp up. Once the switch current reaches 200mA, comparator A1 resets the latch, which turns off Q1 after about 80ns. Inductor current flows through the internal Schottky D1 to GND, charging the flying capacitor. Once the 300ns off-time has elapsed, and internal diode current drops below 250mA (as detected by comparator A2), Q1 turns on again and ramps up to 200mA. This switching action continues until the output capacitor charge is replenished (until the FB pin decreases to 0V), then A3 turns off the internal circuitry and the cycle repeats. The inverting charge pump topology replaces L1B with the series combination D2 and R2.

APPLICATIONS INFORMATION

CHOOSING A REGULATOR TOPOLOGY

Inverting Charge Pump

The inverting charge pump regulator combines an inductor-based step-up with an inverting charge pump. This configuration usually provides the best size, efficiency and output ripple and is applicable where the magnitude of V_{OUT} is greater than V_{IN}. Negative outputs to –38V can be produced with the LT3483 in this configuration. For cases where the magnitude of V_{OUT} is less than or equal to V_{IN}, use a 2-inductor or transformer configuration such as the inverting flyback.

In the inverting charge pump configuration, a resistor is added in series with the Schottky diode between the negative output and the D pin of the LT3483. The purpose of this resistor is to smooth/reduce the current spike in the flying capacitor when the switch turns on. A 10Ω resistor works well for a Li^+ to –8V application, and the impact to converter efficiency is less than 3%. The resistor values recommended in the applications circuits also limit the switch current during a short-circuit condition at the output.

Inverting Flyback

The inverting flyback regulator, shown in the –5V application circuit, uses a coupled inductor and is an excellent choice where the magnitude of the output is less than or equal to the supply voltage. The inverting flyback also performs well in a step-up/invert application, but it occupies more board space compared with the inverting charge pump. Also, the maximum $|V_{OUT}|$ using the flyback is less than can be obtained with the charge pump—it is reduced from 38V by the magnitudes of V_{IN} and ringing at the switch node. Under a short-circuit condition at the output, a proprietary technique limits the switch current and prevents damage to the LT3483 even with supply voltage as high as 16V. As an option, a 0.47µF capacitor may be added between terminals D and SW of LT3483 to suppress ringing at SW.

Inductor Selection

Several recommended inductors that work well with the LT3483 are listed in Table 1, although there are many other manufacturers and devices that can be used. Consult each manufacturer for more detailed information and for their entire selection of related parts. Many different sizes and shapes are available. For inverting charge pump regulators with input and output voltages below 7V, a 4.7µH or 6.8µH inductor is usually the best choice. For flyback regulators or for inverting charge pump regulators where the input or output voltage is greater than 7V, a 10µH inductor is usually the best choice. A larger value inductor can be used to slightly increase the available output current, but limit

APPLICATIONS INFORMATION

it to around twice the value recommended, as too large of an inductance will increase the output voltage ripple without providing much additional output current.

Table 1. Recommended Inductors

PART	L (µH)	MAX I_{DC} (mA)	DCR (Ω)	HEIGHT (mm)	MANUFACTURER
LQH2MCN4R7M02L LQH2MCN6R8M02L LQH2MCN100M02L	4.7 6.8 10	300 255 225	0.84 1.0 1.2	0.95	Murata www.murata.com
SDQ12 Coupled Inductor	10 15	980 780	0.72 1.15	1.2	Cooper Electronics Tech www.cooperet.com
744876 Coupled Inductor	10	550	0.46	1.2	Würth Elektronik www.we-online.com

Capacitor Selection

The small size and low ESR of ceramic capacitors make them ideal for LT3483 applications. Use of X5R and X7R types is recommended because they retain their capacitance over wider voltage and temperature ranges than other dielectric types. Always verify the proper voltage rating. Table 2 shows a list of several ceramic capacitor manufacturers. Consult the manufacturers for more detailed information on their entire selection of ceramic capacitors.

A 4.7µF ceramic bypass capacitor on the V_{IN} pin is recommended where the distance to the power supply or battery could be more than a couple inches. Otherwise, a 1µF is adequate.

A capacitor in parallel with feedback resistor R1 is recommended to reduce the output voltage ripple. Use a 5pF capacitor for the inverting charge pump, and a 22pF value for the inverting flyback or other dual inductor configurations. Output voltage ripple can be reduced to 20mV in some cases using this capacitor in combination with an appropriately selected output capacitor.

The output capacitor is selected based on desired output voltage ripple. For low output voltage ripple in the inverting flyback configuration, use a 4.7µF to 10µF capacitor. The inverting charge pump utilizes values ranging from 0.22µF to 4.7µF. The following formula is useful to estimate the output capacitor value needed:

$$C_{OUT} = \frac{L \bullet I_{SW}^2}{-V_{OUT} \bullet \Delta V_{OUT}}$$

where $I_{SW} = 0.25A$ and $\Delta V_{OUT} = 30mV$. The flying capacitor in the inverting charge pump configuration ranges from 0.1µF to 0.47µF. Multiply the value predicted by the above equation for C_{OUT} by 1/10 to determine the value needed for the flying capacitor.

Table 2. Recommended Ceramic Capacitor Manufacturers

MANUFACTURER	URL
AVX	www.avxcorp.com
Kemet	www.kemet.com
Murata	www.murata.com
Taiyo Yuden	www.tyuden.com

Setting the Output Voltage

The output voltage is programmed using one feedback resistor according to the following formula:

$$R1 = -\frac{V_{OUT}}{10\mu A}$$

Inrush Current

When V_{IN} is increased from ground to operating voltage, an inrush current will flow through the input inductor and integrated Schottky diode to charge the flying capacitor. Conditions that increase inrush current include a larger, more abrupt voltage step at V_{IN}, a larger flying capacitor, and an inductor with a low saturation current.

While the internal diode is designed to handle such events, the inrush current should not be allowed to exceed 1.5A. For circuits that use flying capacitors within the recommended range and have input voltages less than 5V, inrush current remains low, posing no hazard to the device. In cases where there are large steps at V_{IN}, inrush current should be measured to ensure operation within the limits of the device.

APPLICATIONS INFORMATION

Board Layout Considerations

As with all switching regulators, careful attention must be given to the PCB board layout and component placement. Proper layout of the high frequency switching path is essential. The voltage signals of the SW and D pins have sharp rising and falling edges. Minimize the length and area of all traces connected to the SW and D pins. In particular, it is desirable to minimize the trace length to and from the flying capacitor, since current in this capacitor switches directions within a cycle. Always use a ground plane under the switching regulator to minimize interplane coupling.

Suggested Layout (DFN)
for Inverting Charge Pump

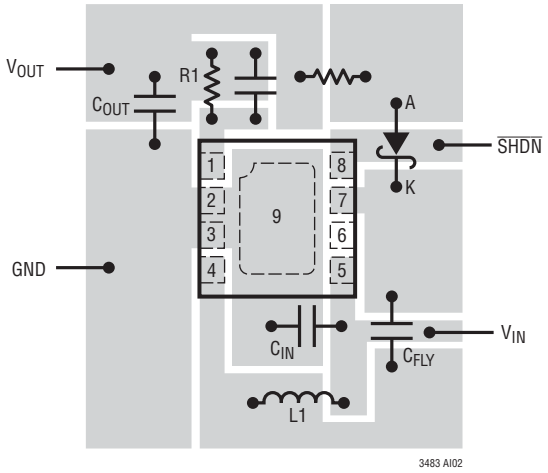

Suggested Layout (SOT-23)
for Inverting Charge Pump

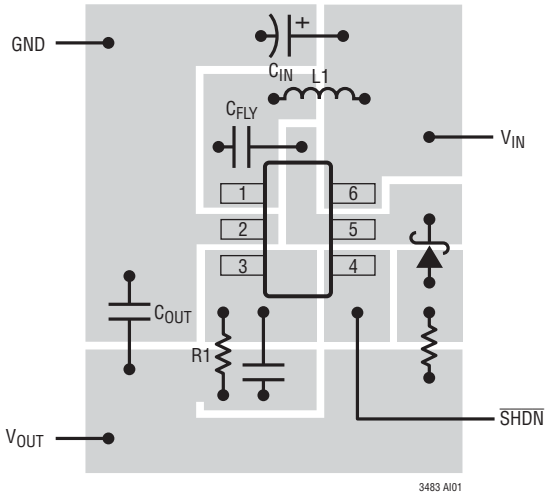

TYPICAL APPLICATION

3.6V to –8V DC/DC Converter
Low Profile, Small Footprint

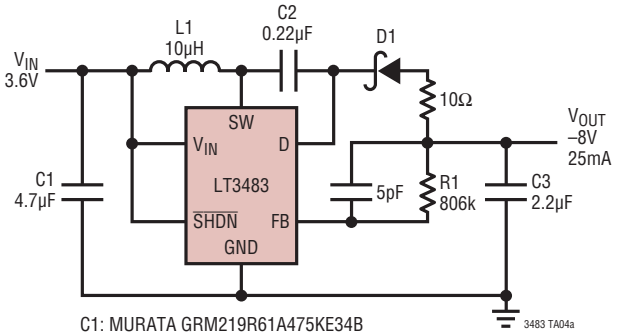

C1: MURATA GRM219R61A475KE34B
C2: TAIYO YUDEN LMK107BJ224
C3: MURATA GRM219R61C225KA88B
D1: PHILIPS PMEG2005EB
L1: MURATA LQH2MCN100K02L

Switching Waveform

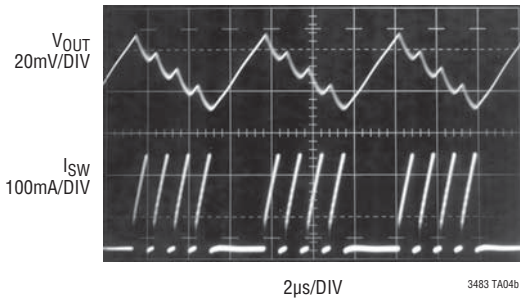

PACKAGE DESCRIPTION

DC Package
8-Lead Plastic DFN (2mm × 2mm)
(Reference LTC DWG # 05-08-1719 Rev Ø)

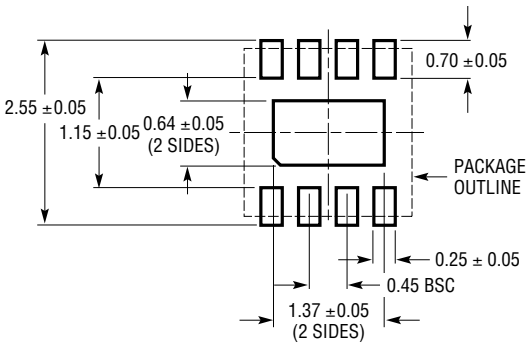

RECOMMENDED SOLDER PAD PITCH AND DIMENSIONS
APPLY SOLDER MASK TO AREAS THAT ARE NOT SOLDERED

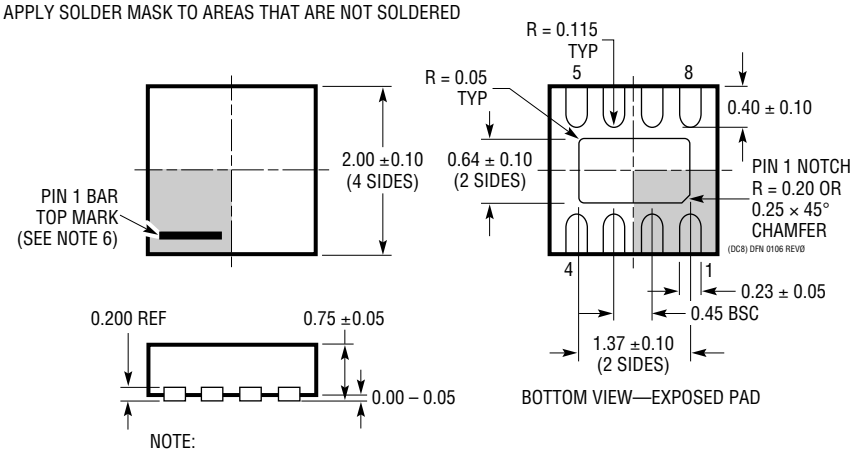

NOTE:
1. DRAWING IS NOT A JEDEC PACKAGE OUTLINE
2. DRAWING NOT TO SCALE
3. ALL DIMENSIONS ARE IN MILLIMETERS
4. DIMENSIONS OF EXPOSED PAD ON BOTTOM OF PACKAGE DO NOT INCLUDE MOLD FLASH. MOLD FLASH, IF PRESENT, SHALL NOT EXCEED 0.15mm ON ANY SIDE
5. EXPOSED PAD SHALL BE SOLDER PLATED
6. SHADED AREA IS ONLY A REFERENCE FOR PIN 1 LOCATION ON THE TOP AND BOTTOM OF PACKAGE

PACKAGE DESCRIPTION

S6 Package
6-Lead Plastic TSOT-23
(Reference LTC DWG # 05-08-1636 Rev B)

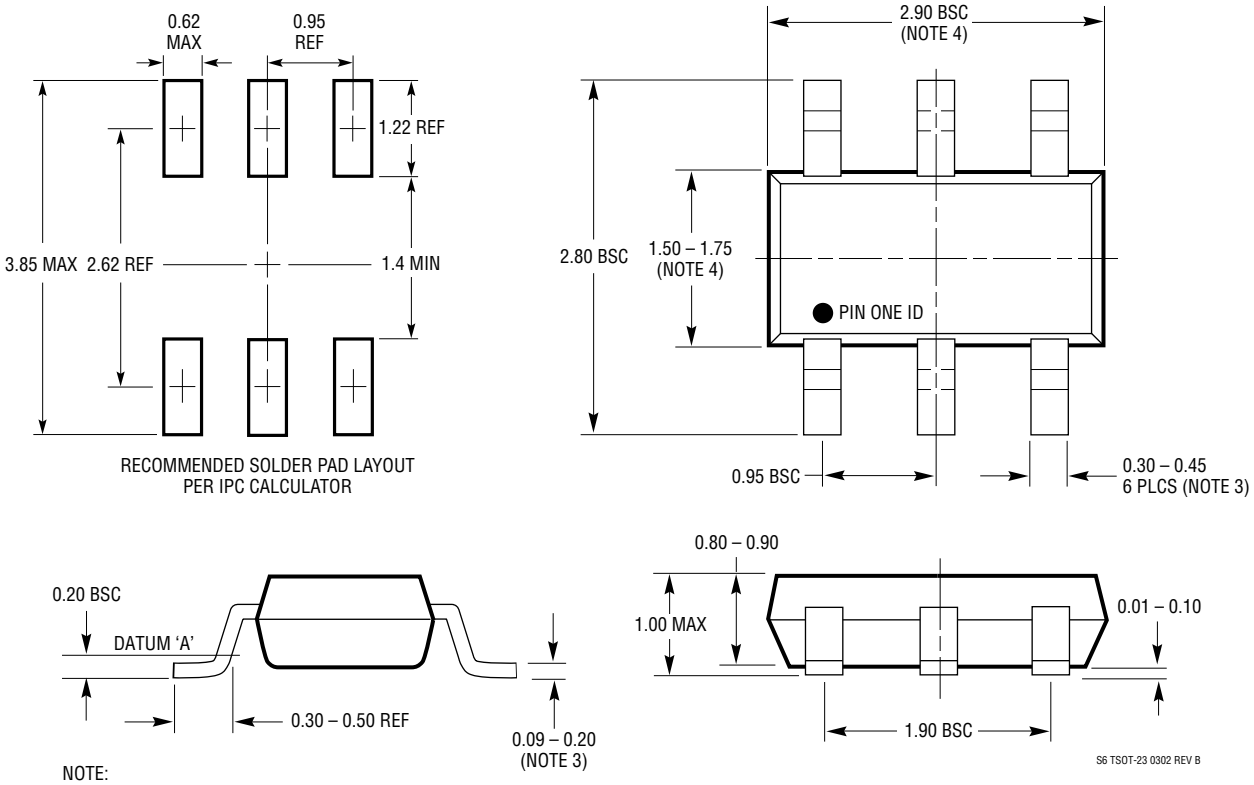

NOTE:
1. DIMENSIONS ARE IN MILLIMETERS
2. DRAWING NOT TO SCALE
3. DIMENSIONS ARE INCLUSIVE OF PLATING
4. DIMENSIONS ARE EXCLUSIVE OF MOLD FLASH AND METAL BURR
5. MOLD FLASH SHALL NOT EXCEED 0.254mm
6. JEDEC PACKAGE REFERENCE IS MO-193

Information furnished by Linear Technology Corporation is believed to be accurate and reliable. However, no responsibility is assumed for its use. Linear Technology Corporation makes no representation that the interconnection of its circuits as described herein will not infringe on existing patent rights.

TYPICAL APPLICATIONS

3.6V to –22V DC/DC Converter

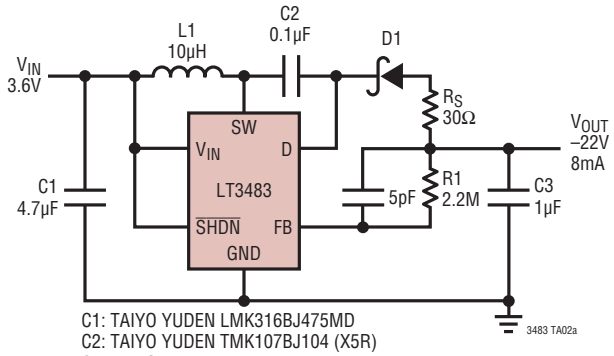

C1: TAIYO YUDEN LMK316BJ475MD
C2: TAIYO YUDEN TMK107BJ104 (X5R)
C3: TAIYO YUDEN TMK316BJ105MD
D1: PHILIPS PMEG3002AEB
L1: MURATA LQH2MCN100K02L

3.6V to –22V Converter Efficiency and Power Loss

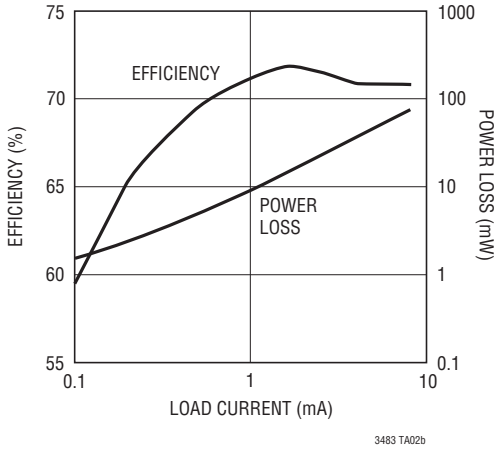

–5V DC/DC Converter

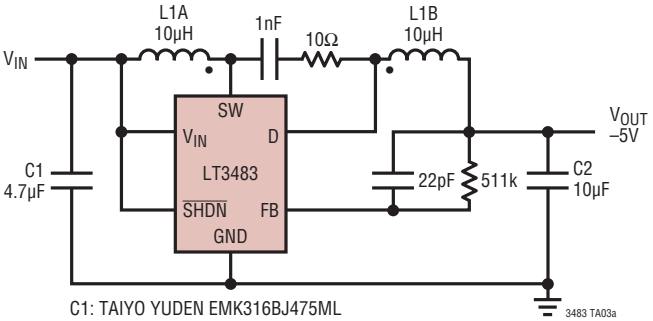

C1: TAIYO YUDEN EMK316BJ475ML
C2: TAIYO YUDEN JMK316BJ106ML
L1A, L1B: WURTH 744876100

–5V Efficiency

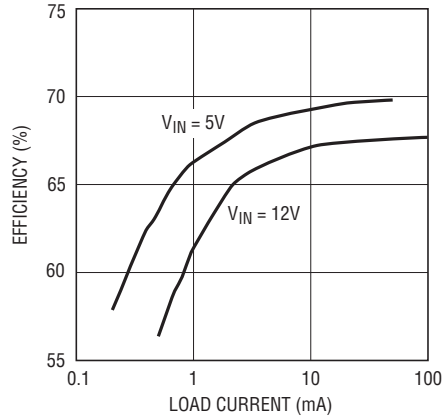

RELATED PARTS

PART NUMBER	DESCRIPTION	COMMENTS
LT1617/LT1617-1	350mA/100mA (I_{SW}) High Efficiency Micropower Inverting DC/DC Converter	V_{IN}: 1.2V to 15V, $V_{OUT(MAX)}$ = –34V, I_Q = 20µA, I_{SD} < 1µA ThinSOT Package
LT1931/LT1931A	1A (I_{SW}), 1.2MHz/2.2MHz, High Efficiency Micropower Inverting DC/DC Converter	V_{IN}: 2.6V to 16V, $V_{OUT(MAX)}$ = –34V, I_Q = 5.8mA, I_{SD} < 1µA ThinSOT Package
LT1945	Dual Output, Boost/Inverter, 350mA (I_{SW}), Constant Off-Time, High Efficiency Step-Up DC/DC Converter	V_{IN}: 1.2V to 15V, $V_{OUT(MAX)}$ = ±34V, I_Q = 40µA, I_{SD} < 1µA, MS10 Package
LT3463	Dual Output, Boost/Inverter, 250mA (I_{SW}), Constant Off-Time, High Efficiency Step-Up DC/DC Converter with Integrated Schottky Diodes	V_{IN}: 2.3V to 15V, $V_{OUT(MAX)}$ = ±40V, I_Q = 40µA, I_{SD} < 1µA DFN Package
LT3464	85mA (I_{SW}), High Efficiency Step-Up DC/DC Converter with Integrated Schottky and PNP Disconnect	V_{IN}: 2.3V to 10V, $V_{OUT(MAX)}$ = 34V, I_Q = 25µA, I_{SD} < 1µA ThinSOT Package
LT3472	Boost (350mA) and Inverting (400mA) DC/DC Converter for CCD Bias with Integrated Schottkys	V_{IN}: 2.3V to 15V, $V_{OUT(MAX)}$ = ±40V, I_Q = 2.8mA, I_{SD} < 1µA DFN Package

Linear Technology Corporation
1630 McCarthy Blvd., Milpitas, CA 95035-7417
(408) 432-1900 • FAX: (408) 434-0507 • www.linear.com

LT 0508 REV B • PRINTED IN USA

© LINEAR TECHNOLOGY CORPORATION 2004