SINGLE RJ45 CONNECTOR MODULE WITH INTEGRATED 10 BASE T MAGNETICS AND LEDS

P/N : LT1S010-43

Feature



- RJ-45 connector integrated with X'FMR
- Size same as RJ-45 connector to save PCB Board space.
- Reduce EMI radiation, improve EMI performance.
- Complies with IEEE802.3 standards.
- Operating temperature range: 0℃to +70℃.
- Storage temperature range: -25℃to +125℃.
- Recommended panel

Part Number	Standard LED	Forward*V(Max)	(TYP)
3	YELLOW	2.6V	2.1V
4	GREEN	2.6V	2.2V

*With a forward current 20mA

Electrical Specifications @ 25°C						
Part Number	Turns Ratio (±5%)		Inductance (uH Min) @ 100KHz/0.2Vrms	Leakage Inductance (uH Max)	Inter winding Capacitance (pF Max)	Voltage isolation (Vrms)
	TX	RX				
LT1S010-43	1CT:1.41	1CT:1	140	0.4	20	1500

Schematic

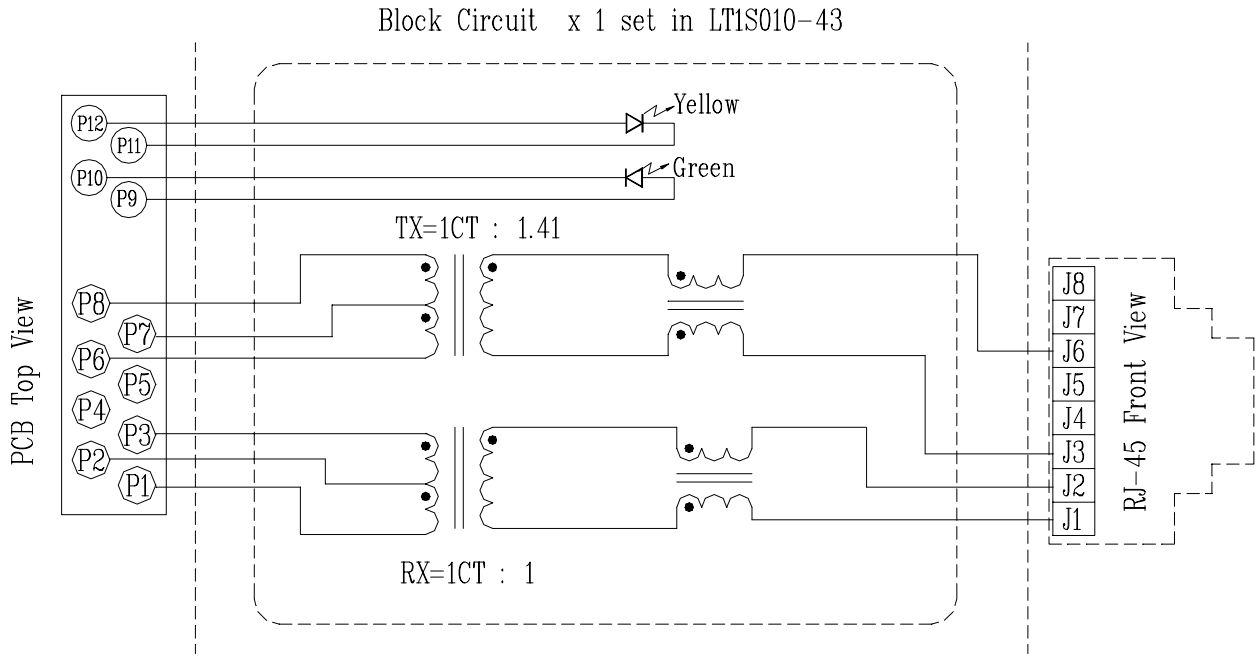

Mechanical

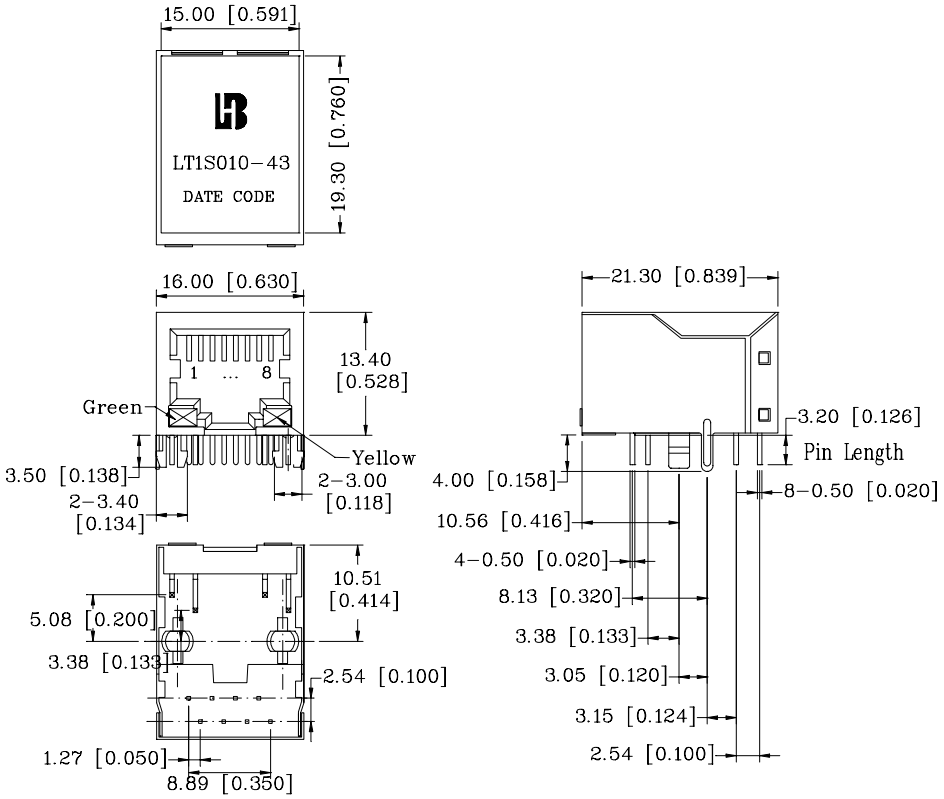

Units: mm[Inches] Tolerances: xx.x±0.25[0.010]
0.xx±0.05[0.002]

1. Plastic Material : PBT 15% Glass Filled(UL 94V-0), Black Housing
2. Metal Shield : Brass C2680-H, 20u Nickel Plated, t=0.25mm
3. Spring Wire : 0.45mm Dia. Phosphor bronze with 6u gold plated
4. Solder Pin : 0.4x0.4mm, Phosphor bronze with solder Plated
5. Durability : 300 Mating cycles Min.

PCB Layout Mounting Hole(Top View)

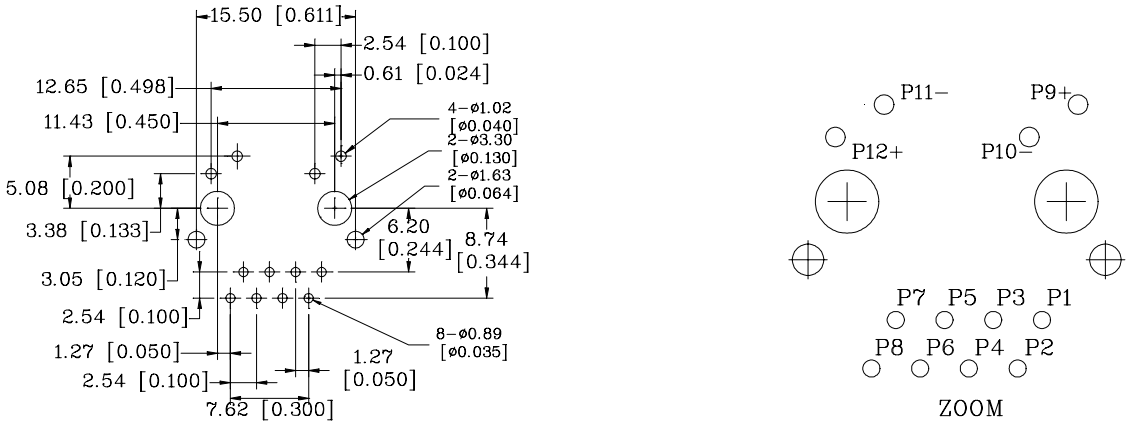

Units: mm[Inches]
Tolerances: xx.x±0.25[0.010]
0.xx±0.05[0.002]