Dual 700MHz, 200mA, Adjustable Current Operational Amplifier

FEATURES

- **700MHz Gain Bandwidth**
- **±200mA Minimum I_{OUT}**
- **Adjustable Quiescent Current**
- **Low Distortion: –72dBc at 1MHz, $4V_{P-P}$, 25Ω, $A_V = 2$**
- Stable in $A_V \geq 10$, Simple Compensation for $A_V < 10$
- ±4.3V Minimum Output Swing, $V_S = \pm 6V$, $R_L = 25\Omega$
- Stable with 1000pF Load
- 6nV/√Hz Input Noise Voltage
- 2pA/√Hz Input Noise Current
- 4mV Maximum Input Offset Voltage
- 4µA Maximum Input Bias Current
- 400nA Maximum Input Offset Current
- ±4.5V Minimum Input CMR, $V_S = \pm 6V$
- Specified at ±6V, ±2.5V

APPLICATIONS

- DSL Modems
- xDSL PCI Cards
- USB Modems
- Line Drivers

DESCRIPTION

The LT®1969 is an adjustable current version of the popular LT1886, a 200mA minimum output current, dual op amp with outstanding distortion performance. The adjustable current feature is highly desirable in applications where minimum power dissipation is required while still being able to provide adequate line termination.

At nominal supply current, the amplifiers are gain of 10 stable and can easily be compensated for lower gains. The LT1969 features balanced high impedance inputs with 4µA input bias current and 4mV maximum input offset voltage. Single supply applications are easy to implement and have lower total noise than current feedback amplifier implementations.

The output drives a 25Ω load to ±4.3V with ±6V supplies. On ±2.5V supplies, the output swings ±1.5V with a 100Ω load. The amplifier is stable with a 1000pF capacitive load making it useful in buffer and cable driver applications.

The LT1969 is manufactured on Linear Technology's advanced low voltage complementary bipolar process and is available in a thermally enhanced MS10 package

LT, LTC and LT are registered trademarks of Linear Technology Corporation.

TYPICAL APPLICATION

Single 12V Supply ADSL Modem Line Driver

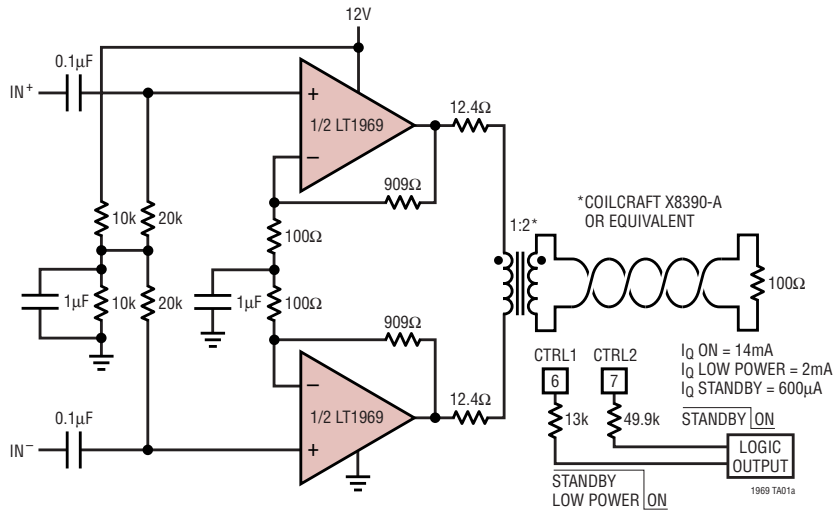

ADSL Modem Line Driver Distortion

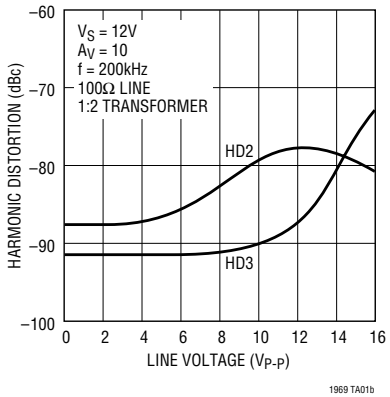

ABSOLUTE MAXIMUM RATINGS

(Note 1)

Total Supply Voltage (V^+ to V^-) 13.2V
Input Current (Note 2) ..... ±10mA
Input Voltage (Note 2) ..... $\pm V_S$
Maximum Continuous Output Current (Note 3)
DC ..... ±100mA
AC ..... ±300mA
Operating Temperature Range (Note 10) –40°C to 85°C
Specified Temperature Range (Note 9) .. –40°C to 85°C
Maximum Junction Temperature ..... 150°C
Storage Temperature Range ..... –65°C to 150°C
Lead Temperature (Soldering, 10 sec)..... 300°C

PACKAGE/ORDER INFORMATION

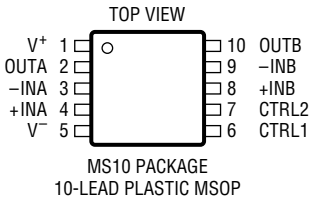

MS10 PACKAGE
10-LEAD PLASTIC MSOP

T_{JMAX} = 150°C, θ_{JA} = 110°C/W (NOTE 4)

ORDER PART NUMBER
LT1969CMS
MS10 PART MARKING
LTTN

Consult factory for parts specified with wider operating temperature ranges.

ELECTRICAL CHARACTERISTICS

The ● denotes specifications which apply over the full operating temperature range, otherwise specifications are at T_A = 25°C. V_S = ±6V, V_{CM} = 0V, nominal mode with a 13k resistor from CTRL1 to V^- and a 49.9k resistor from CTRL2 to V^-, pulse power tested unless otherwise noted. (Note 9)

SYMBOL	PARAMETER	CONDITIONS		MIN	TYP	MAX	UNITS
V_{OS}	Input Offset Voltage	(Note 5)	 ●		1	4 5	mV mV
	Input Offset Voltage Drift	(Note 8)	●		3	17	µV/°C
I_{OS}	Input Offset Current		 ●		150	400 600	nA nA
I_B	Input Bias Current		 ●		1.5	4 6	µA µA
e_n	Input Noise Voltage	f = 10kHz			6		nV/√Hz
i_n	Input Noise Current	f = 10kHz			2		pA/√Hz
R_{IN}	Input Resistance	V_{CM} = ±4.5V Differential		5	10 35		MΩ kΩ
C_{IN}	Input Capacitance				2		pF
	Input Voltage Range (Positive) Input Voltage Range (Negative)		● ●	4.5	5.9 –5.2	 –4.5	V V
CMRR	Common Mode Rejection Ratio	V_{CM} = ±4.5V	●	77	98		dB
	Minimum Supply Voltage	Guaranteed by PSRR	●			±2	V
PSRR	Power Supply Rejection Ratio	V_S = ±2V to ±6.5V	 ●	80 78	86		dB dB
A_{VOL}	Large-Signal Voltage Gain	V_{OUT} = ±4V, R_L = 100Ω	 ●	5.0 4.5	12		V/mV V/mV
		V_{OUT} = ±4V, R_L = 25Ω	 ●	4.5 4.0	12		V/mV V/mV
V_{OUT}	Output Swing	R_L = 100Ω, 10mV Overdrive	 ●	4.85 4.70	5		±V ±V
		R_L = 25Ω, 10mV Overdrive	 ●	4.30 4.10	4.6		±V ±V
		I_{OUT} = 200mA, 10mV Overdrive	 ●	4.30 4.10	4.5		±V ±V

ELECTRICAL CHARACTERISTICS

The ● denotes specifications which apply over the full operating temperature range, otherwise specifications are at T_A = 25°C. V_S = ±6V, V_{CM} = 0V, nominal mode with a 13k resistor from CTRL1 to V^- and a 49.9k resistor from CTRL2 to V^-, pulse power tested unless otherwise noted. (Note 9)

SYMBOL	PARAMETER	CONDITIONS		MIN	TYP	MAX	UNITS
I_{SC}	Short-Circuit Current (Sourcing) Short-Circuit Current (Sinking)	(Note 3)			700 500		mA mA
SR	Slew Rate	A_V = –10 (Note 6)		100	200		V/µs
	Full Power Bandwidth	4V Peak (Note 7)			8		MHz
GBW	Gain Bandwidth	f = 1MHz			700		MHz
t_r, t_f	Rise Time, Fall Time	A_V = 10, 10% to 90% of 0.1V, R_L = 100Ω			4		ns
	Overshoot	A_V = 10, 0.1V, R_L = 100Ω			1		%
	Propagation Delay	A_V = 10, 50% V_{IN} to 50% V_{OUT}, 0.1V, R_L = 100Ω			2.5		ns
t_S	Settling Time	6V Step, 0.1%			50		ns
	Harmonic Distortion	HD2, A_V = 10, $2V_{P-P}$, f = 1MHz, R_L = 100Ω/25Ω HD3, A_V = 10, $2V_{P-P}$, f = 1MHz, R_L = 100Ω/25Ω			–75/–63 –85/–71		dBc dBc
IMD	Intermodulation Distortion	A_V = 10, f = 0.9MHz, 1MHz, 14dBm, R_L = 100Ω/25Ω			–81/–80		dBc
R_{OUT}	Output Resistance	A_V = 10, f = 1MHz			0.1		Ω
I_S	Supply Current	Per Amplifier	 ●		7	8.25 8.50	mA mA
	CTRL1 Voltage	13k to V^-, Measured with Respect to V^-	 ●	0.77 0.74	0.97	1.25 1.30	V V
	CTRL2 Voltage	49.9k to V^-, Measured with Respect to V^-	 ●	0.87 0.80	1.05	1.18 1.25	V V
	Minimum Supply Current	per Amplifier; CTRL1, CTRL2 Open	 ●		300	800 1100	µA µA
	Maximum Supply Current	per Amplifier; CTRL1 or CTRL2 Shorted to V^-			13		mA

The ● denotes specifications which apply over the full operating temperature range, otherwise specifications are at T_A = 25°C. V_S = ±2.5V, V_{CM} = 0V, nominal mode with a 13k resistor from CTRL1 to V^- and a 49.9k resistor from CTRL2 to V^-, pulse power tested unless otherwise noted. (Note 9)

SYMBOL	PARAMETER	CONDITIONS		MIN	TYP	MAX	UNITS
V_{OS}	Input Offset Voltage	(Note 5)	 ●		1.5	5 6	mV mV
	Input Offset Voltage Drift	(Note 8)	●		5	17	µV/°C
I_{OS}	Input Offset Current		 ●		100	350 550	nA nA
I_B	Input Bias Current		 ●		1.2	3.5 5.5	µA µA
e_n	Input Noise Voltage	f = 10kHz			6		nV/√Hz
i_n	Input Noise Current	f = 10kHz			2		pA/√Hz
R_{IN}	Input Resistance	V_{CM} = ±1V Differential		10	20 50		MΩ kΩ
C_{IN}	Input Capacitance				2		pF
	Input Voltage Range (Positive) Input Voltage Range (Negative)		● ●	1	2.4 –1.7	 –1	V V
CMRR	Common Mode Rejection Ratio	V_{CM} = ±1V	●	75	91		dB

ELECTRICAL CHARACTERISTICS

The ● denotes specifications which apply over the full operating temperature range, otherwise specifications are at T_A = 25°C. V_S = ±2.5V, V_{CM} = 0V, nominal mode with a 13k resistor from CTRL1 to V^- and a 49.9k resistor from CTRL2 to V^-, pulse power tested unless otherwise noted. (Note 9)

SYMBOL	PARAMETER	CONDITIONS		MIN	TYP	MAX	UNITS
A_{VOL}	Large-Signal Voltage Gain	V_{OUT} = ±1V, R_L = 100Ω	 ●	5.0 4.5	10		V/mV V/mV
		V_{OUT} = ±1V, R_L = 25Ω	 ●	4.5 4.0	10		V/mV V/mV
V_{OUT}	Output Swing	R_L = 100Ω, 10mV Overdrive	 ●	1.50 1.40	1.65		±V ±V
		R_L = 25Ω, 10mV Overdrive	 ●	1.35 1.25	1.50		±V ±V
		I_{OUT} = 200mA, 10mV Overdrive	 ●	0.87 0.80	1		±V ±V
I_{SC}	Short-Circuit Current (Sourcing) Short-Circuit Current (Sinking)	(Note 3)			500 400		mA mA
SR	Slew Rate	A_V = –10 (Note 6)		50	100		V/µs
	Full Power Bandwidth	1V Peak (Note 7)			16		MHz
GBW	Gain Bandwidth	f = 1MHz			530		MHz
t_r, t_f	Rise Time, Fall Time	A_V = 10, 10% to 90% of 0.1V, R_L = 100Ω			7		ns
	Overshoot	A_V = 10, 0.1V, R_L = 100Ω			5		%
	Propagation Delay	A_V = 10, 50% V_{IN} to 50% V_{OUT}, 0.1V, R_L = 100Ω			5		ns
	Harmonic Distortion	HD2, A_V = 10, $2V_{P-P}$, f = 1MHz, R_L = 100Ω/25Ω HD3, A_V = 10, $2V_{P-P}$, f = 1MHz, R_L = 100Ω/25Ω			–75/–64 –80/–66		dBc dBc
IMD	Intermodulation Distortion	A_V = 10, f = 0.9MHz, 1MHz, 5dBm, R_L = 100Ω/25Ω			–77/–85		dBc
R_{OUT}	Output Resistance	A_V = 10, f = 1MHz			0.2		Ω
	Channel Separation	V_{OUT} = ±1V, R_L = 25Ω	 ●	82 80	92		dB dB
I_S	Supply Current	Per Amplifier	 ●		5	6.00 6.25	mA mA
	CTRL1 Voltage	13k to V^-, Measured with Respect to V^-	 ●	0.77 0.74	0.95	1.25 1.30	V V
	CTRL2 Voltage	49.9k to V^-, Measured with Respect to V^-	 ●	0.87 0.80	1.03	1.18 1.25	V V
	Minimum Supply Current	per Amplifier; CTRL1, CTRL2 Open	 ●		250	650 750	µA µA
	Maximum Supply Current	per Amplifier; CTRL1 or CTRL2 Shorted to V^-			11.5		mA

Note 1: Absolute Maximum Ratings are those values beyond which the life of a device may be impaired.

Note 2: The inputs are protected by back-to-back diodes. If the differential input voltage exceeds 0.7V, the input current should be limited to less than 10mA.

Note 3: A heat sink may be required to keep the junction temperature below absolute maximum.

Note 4: Thermal resistance varies depending upon the amount of PC board metal attached to the device. θ_{JA} is specified for a 2500mm^2 test board covered with 2 oz copper on both sides.

Note 5: Input offset voltage is exclusive of warm-up drift.

Note 6: Slew rate is measured between ±2V on a ±4V output with ±6V supplies, and between ±1V on a ±1.5V output with ±2.5V supplies. Falling slew rate is guaranteed by correlation to rising slew rate.

Note 7: Full power bandwidth is calculated from the slew rate: $FPBW = SR/2\pi V_P$.

Note 8: This parameter is not 100% tested.

Note 9: The LT1969C is guaranteed to meet specified performance from 0°C to 70°C. The LT1969C is designed, characterized and expected to meet specified performance from –40°C to 85°C but is not tested or QA sampled at these temperatures.

Note 10: The LT1969C is guaranteed functional over the operating temperature range of –40°C to 85°C.

TYPICAL PERFORMANCE CHARACTERISTICS

13k resistor from CTRL1 to V⁻ and a 49.9k resistor from CTRL2 to V⁻

Supply Current vs Temperature

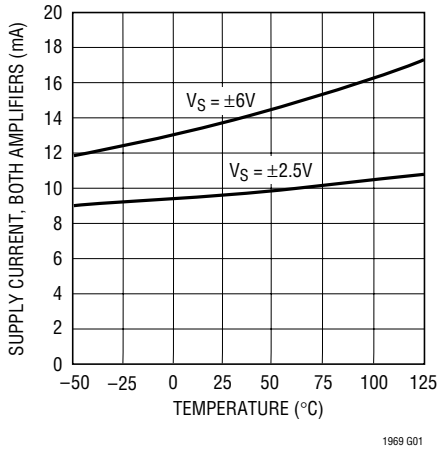

Input Common Mode Range vs Supply Voltage

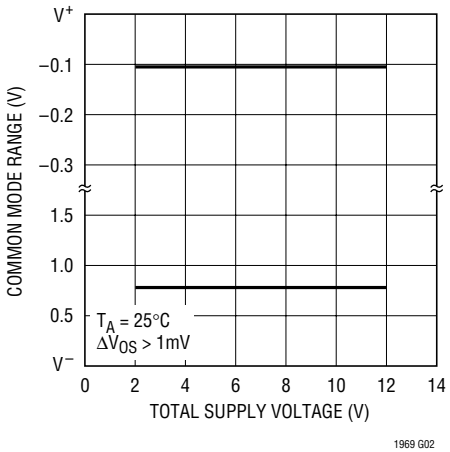

Input Bias Current vs Input Common Mode Voltage

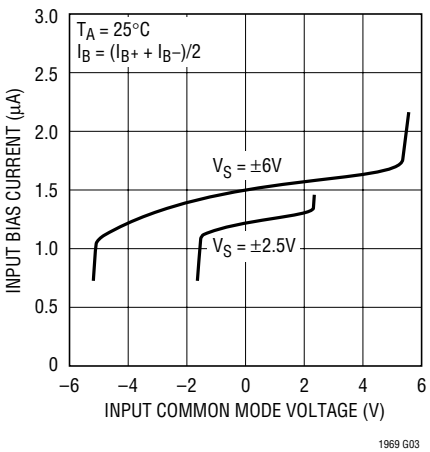

Input Bias Current vs Temperature

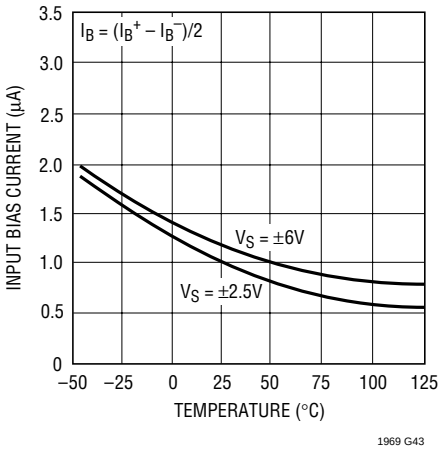

Input Noise Spectral Density

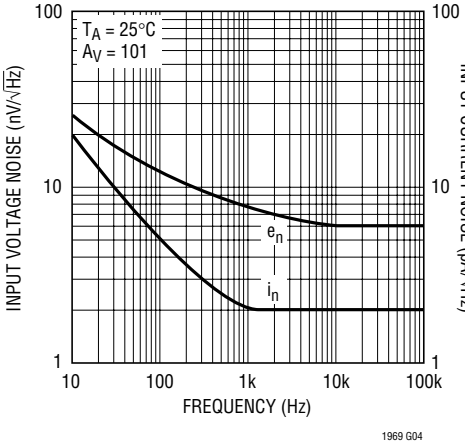

Output Saturation Voltage vs Temperature

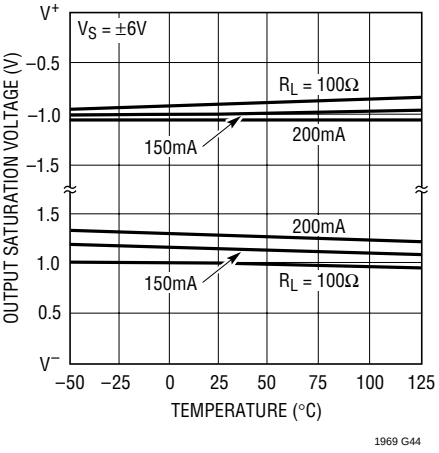

Output Saturation Voltage vs Temperature

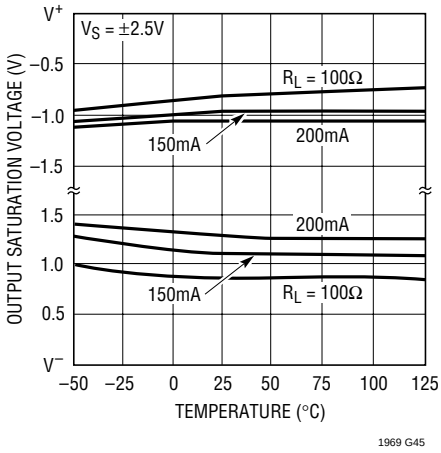

Output Short-Circuit Current vs Temperature

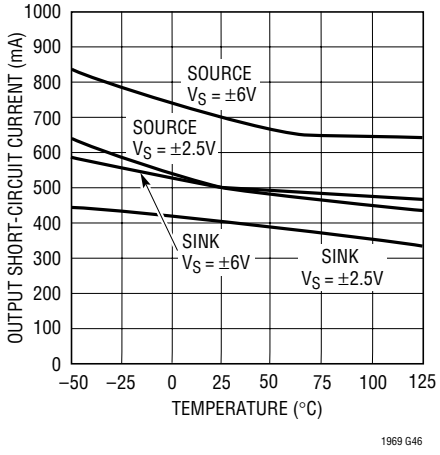

Settling Time vs Output Step

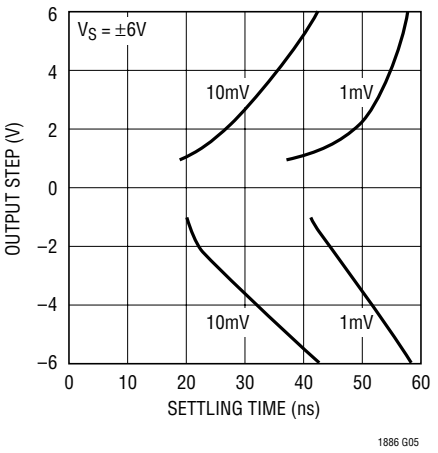

TYPICAL PERFORMANCE CHARACTERISTICS

13k resistor from CTRL1 to V⁻ and a 49.9k resistor from CTRL2 to V⁻

Gain and Phase vs Frequency

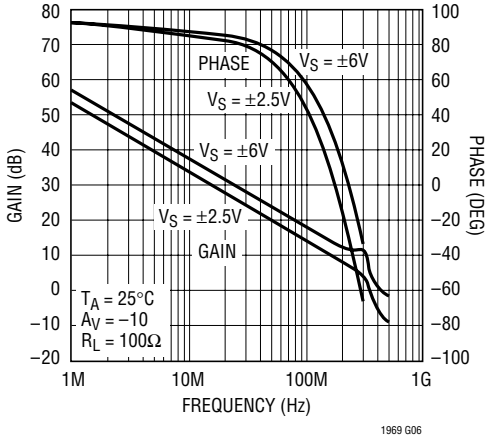

Gain Bandwidth vs Supply Voltage

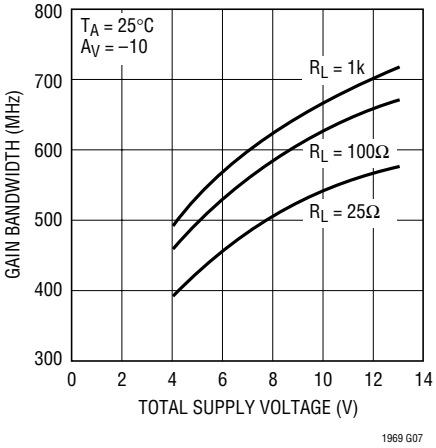

Output Impedance vs Frequency

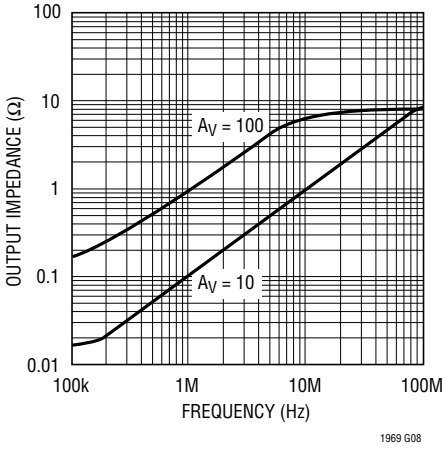

Frequency Response vs Supply Voltage, A_V = 10

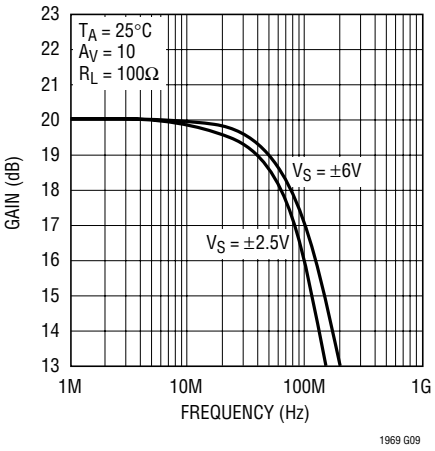

Frequency Response vs Supply Voltage, A_V = –10

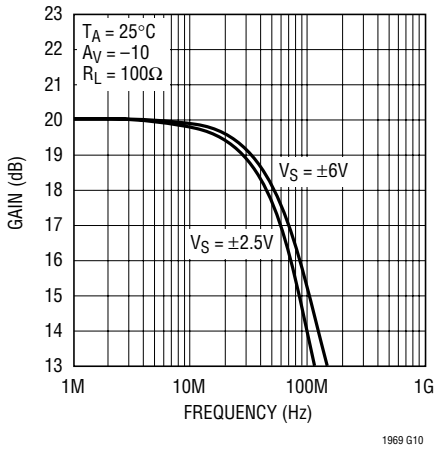

Frequency Response vs Supply Voltage, A_V = 2

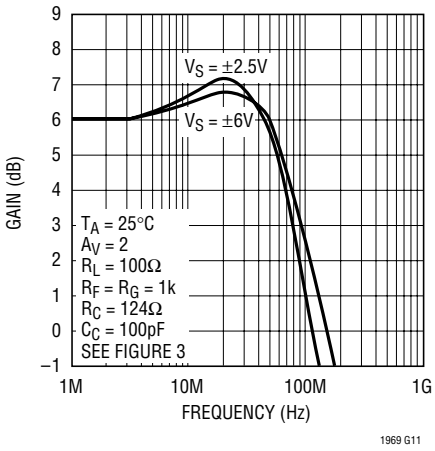

Frequency Response vs Supply Voltage, A_V = –1

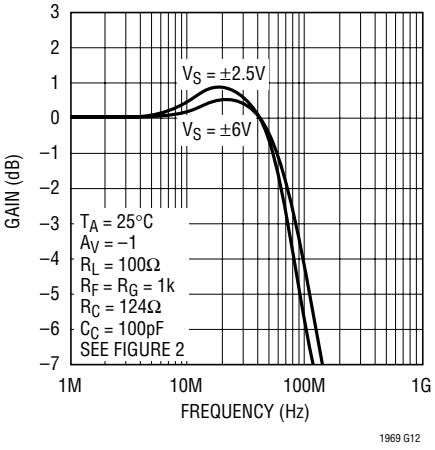

Frequency Response vs Capacitive Load

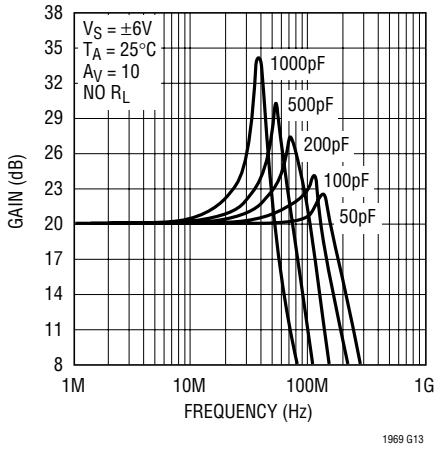

Power Supply Rejection vs Frequency

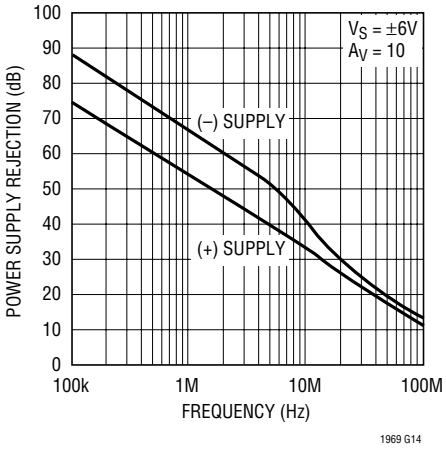

TYPICAL PERFORMANCE CHARACTERISTICS

13k resistor from CTRL1 to V⁻ and a 49.9k resistor from CTRL2 to V⁻

Common Mode Rejection Ratio vs Frequency

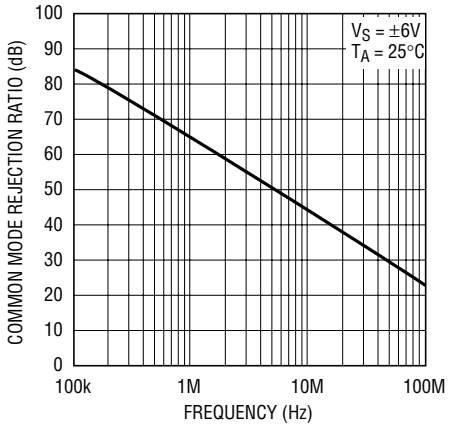

Amplifier Crosstalk vs Frequency

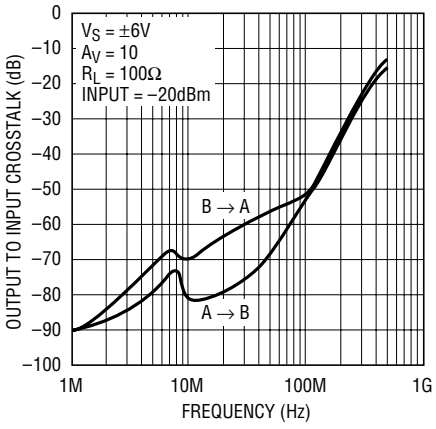

Harmonic Distortion vs Frequency, $A_V = 10$, $V_S = \pm 6V$

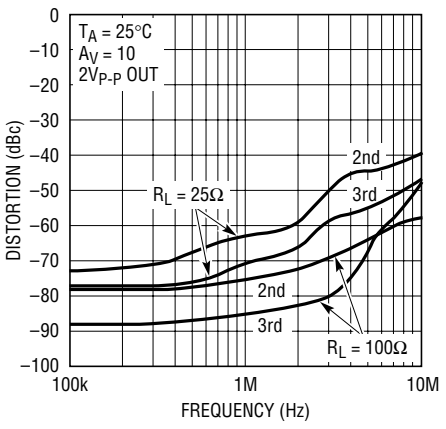

Harmonic Distortion vs Frequency, $A_V = 10$, $V_S = \pm 2.5V$

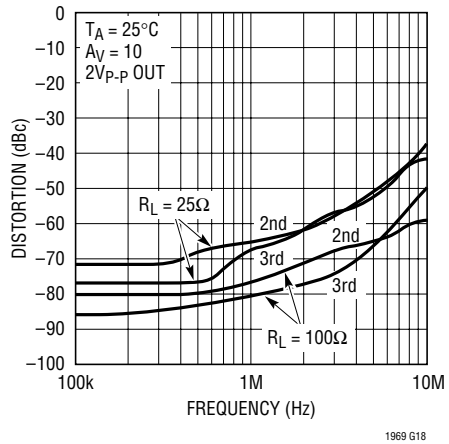

Harmonic Distortion vs Resistive Load

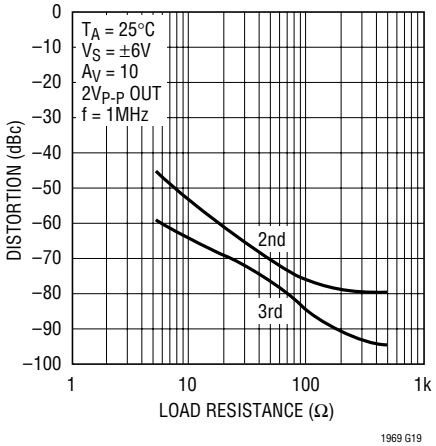

Harmonic Distortion vs Resistive Load

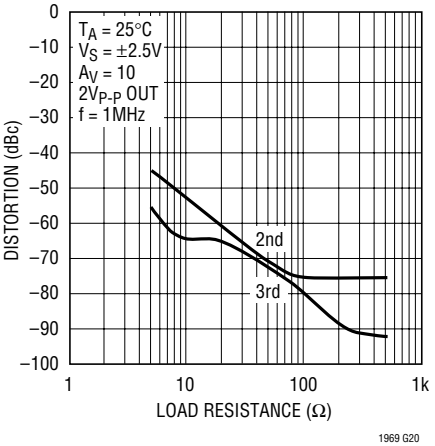

Harmonic Distortion vs Output Swing, $A_V = 10$, $V_S = \pm 6V$

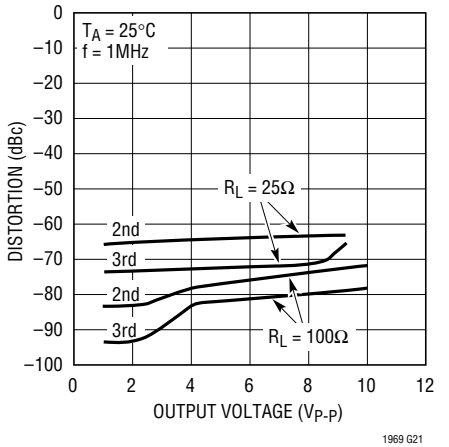

Harmonic Distortion vs Output Swing, $A_V = 10$, $V_S = \pm 2.5V$

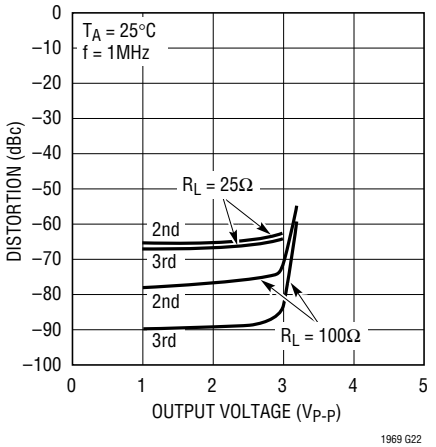

Harmonic Distortion vs Output Swing, $A_V = 2$, $V_S = \pm 6V$

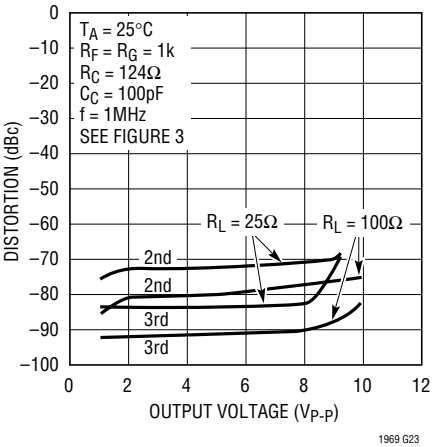

TYPICAL PERFORMANCE CHARACTERISTICS

Harmonic Distortion vs Output Swing, $A_V = 2$, $V_S = \pm 2.5V$

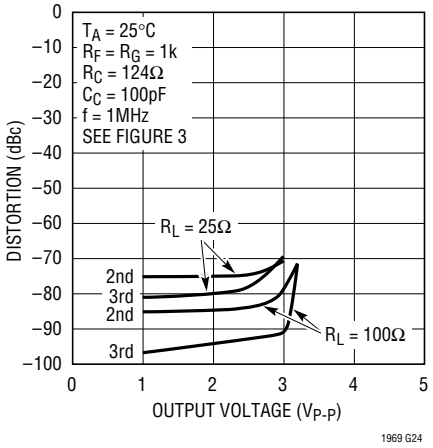

1969 G24

Harmonic Distortion vs Output Current, $V_S = \pm 6V$

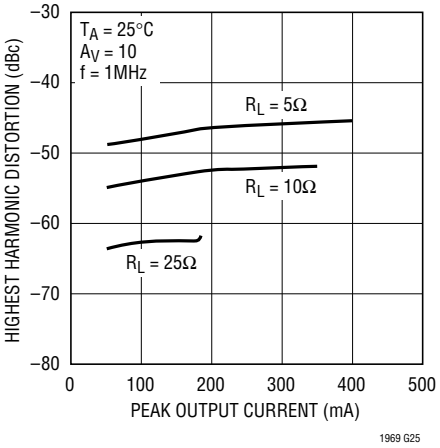

1969 G25

Harmonic Distortion vs Output Current, $V_S = \pm 2.5V$

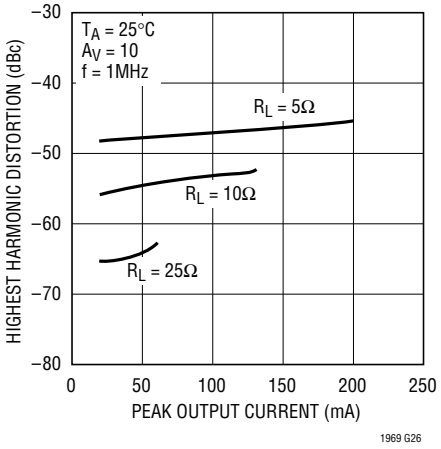

1969 G26

Undistorted Output Swing vs Frequency

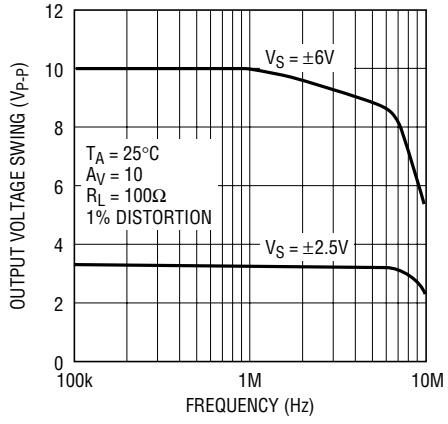

1969 G27

Gain Bandwidth Product vs Supply Current

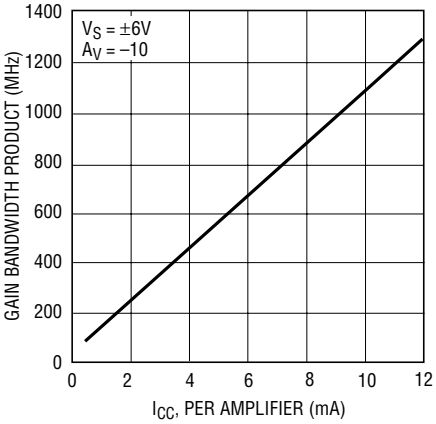

1959 G28

Phase Margin vs Supply Current

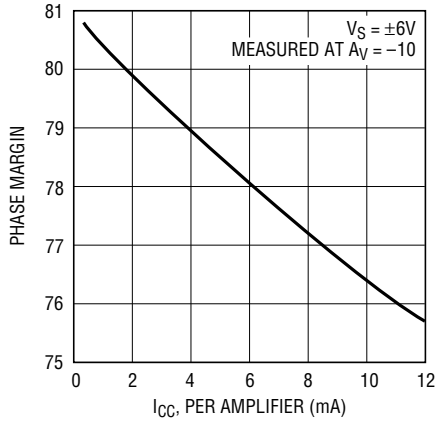

1969 G29

Slew Rate vs Supply Current

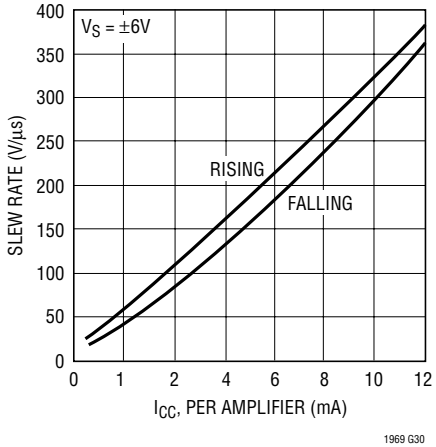

1969 G30

Output Impedance vs Supply Current

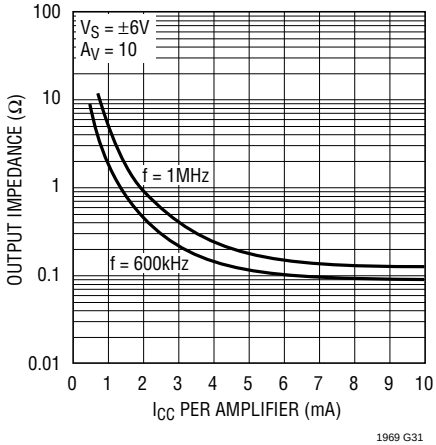

1969 G31

Output Impedance vs Frequency Low Power **

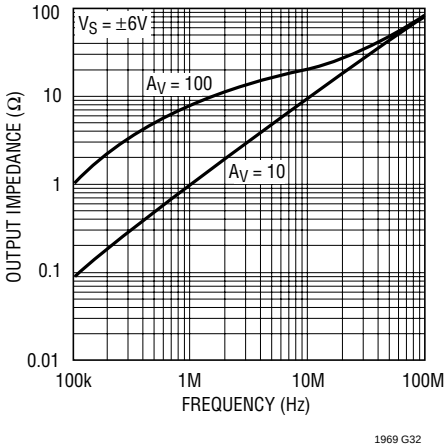

1969 G32

TYPICAL PERFORMANCE CHARACTERISTICS

Maximum I_{OUT} Sourcing vs Quiescent Current

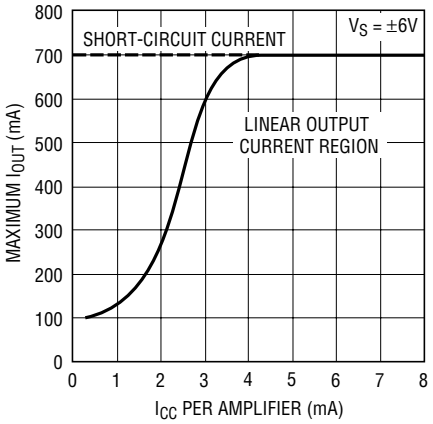

1969 G33

Small-Signal Transient, A_V = 10, Nominal Power*

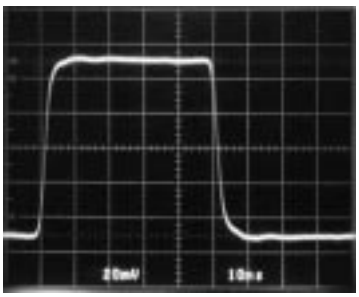

1969 G34

Small-Signal Transient, A_V = –10, Nominal Power*

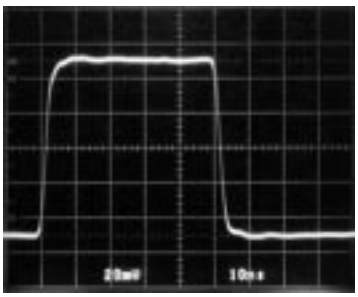

1969 G35

Small-Signal Transient, A_V = 10, C_L = 1000pF, Nominal Power*

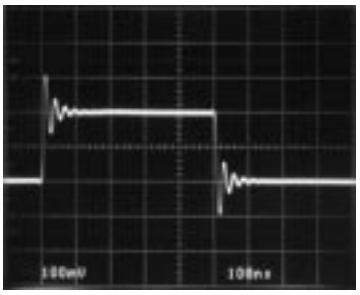

1969 G36

Large-Signal Transient, A_V = 10, Nominal Power*

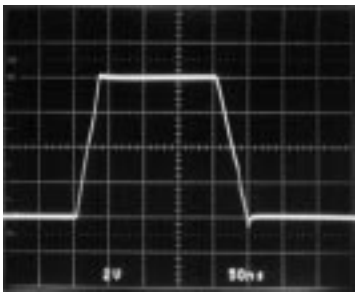

1969 G37

Large-Signal Transient, A_V = –10, Nominal Power*

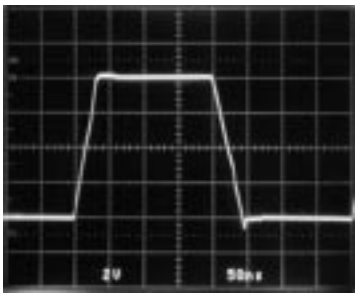

1969 G38

Large-Signal Transient, A_V = 10, C_L = 1000pF, Nominal Power*

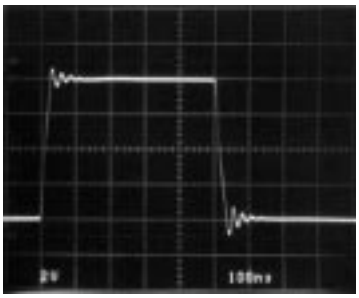

1969 G39

Small-Signal Transient, A_V = 10, C_L = 1000pF, Low Power**

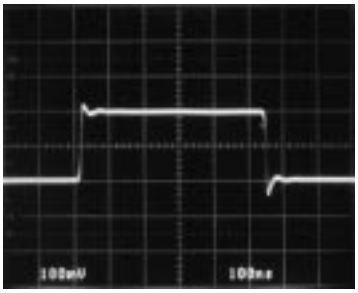

1969 G40

*13k RESISTOR FROM CTRL1 TO V⁻ AND A 49.9k RESISTOR FROM CTRL2 TO V⁻

** 49.9k RESISTOR FROM CTRL2 TO V⁻, CTR1 FLOATING

TYPICAL PERFORMANCE CHARACTERISTICS

Large-Signal Transient, A_V = 10, Low Power**

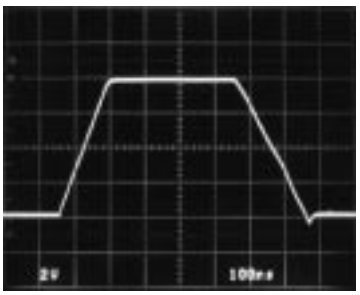

1969 G41

Large-Signal Transient, A_V = –10, Low Power**

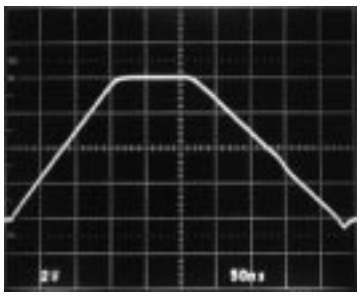

1969 G42

*13k RESISTOR FROM CTRL1 TO V– AND A 49.9k RESISTOR FROM CTRL2 TO V–
** 49.9k RESISTOR FROM CTRL2 TO V–, CTR1 FLOATING

APPLICATIONS INFORMATION

Input Considerations

The inputs of the LT1969 are an NPN differential pair protected by back-to-back diodes (see the Simplified Schematic). There are no series protection resistors onboard which would degrade the input voltage noise. If the inputs can have a voltage difference of more than 0.7V, the input current should be limited to less than 10mA with external resistance (usually the feedback resistor or source resistor). Each input also has two ESD clamp diodes—one to each supply. If an input drive exceeds the supply, limit the current with an external resistor to less than 10mA.

The LT1969 design is a true operational amplifier with high impedance inputs and low input bias currents. The input offset current is a factor of ten lower than the input bias current. To minimize offsets due to input bias currents, match the equivalent DC resistance seen by both inputs. The low input noise current can significantly reduce total noise compared to a current feedback amplifier, especially for higher source resistances.

Layout and Passive Components

With a gain bandwidth product of 700MHz the LT1969 requires attention to detail in order to extract maximum performance. Use a ground plane, short lead lengths and a combination of RF-quality supply bypass capacitors (i.e., 470pF and 0.1µF). As the primary applications have high drive current, use low ESR supply bypass capacitors (1µF to 10µF). For best distortion performance with high drive current a capacitor with the shortest possible trace lengths should be placed between Pins 1 and 5. The optimum location for this capacitor is on the back side of the PC board.

The parallel combination of the feedback resistor and gain setting resistor on the inverting input can combine with the input capacitance to form a pole which can cause frequency peaking. In general, use feedback resistors of 1kΩ or less.

Thermal Issues

The LT1969 enhanced θ_{JA} MS10 package has the V^- pin fused to the lead frame. This thermal connection increases the efficiency of the PC board as a heat sink. The PCB material can be very effective at transmitting heat between the pad area attached to the V^- pin and a ground or power plane layer. Copper board stiffeners and plated through-holes can also be used to spread the heat generated by the device. Table 1 lists the thermal resistance for several different board sizes and copper areas. All measurements

APPLICATIONS INFORMATION

were taken in still air on 3/32" FR-4 board with 2oz copper. This data can be used as a rough guideline in estimating thermal resistance. The thermal resistance for each application will be affected by thermal interactions with other components as well as board size and shape.

Table 1. Fused 10-Lead MSOP Package

COPPER AREA		BOARD AREA	THERMAL RESISTANCE
TOPSIDE* (mm^2)	BACKSIDE (mm^2)	(mm^2)	(JUNCTION-TO-AMBIENT)
540	540	2500	110°C/W
100	100	2500	120°C/W
100	0	2500	130°C/W
30	0	2500	135°C/W
0	0	2500	140°C/W

*Device is mounted on topside.

Calculating Junction Temperature

The junction temperature can be calculated from the equation:

$T_J = (P_D)(\theta_{JA}) + T_A$

T_J = Junction Temperature

T_A = Ambient Temperature

P_D = Device Dissipation

θ_{JA} = Thermal Resistance (Junction-to-Ambient)

As an example, calculate the junction temperature for the circuit in Figure 1 assuming an 70°C ambient temperature.

The device dissipation can be found by measuring the supply currents, calculating the total dissipation and then subtracting the dissipation in the load.

The dissipation for the amplifiers is:

$P_D = (63.5mA)(12V) – (4V/\sqrt{2})^2/(50) = 0.6W$

The total package power dissipation is 0.6W. When a 2500 sq. mm PC board with 540 sq. mm of 2oz copper on top and bottom is used, the thermal resistance is 110°C/W. The junction temperature T_J is:

$T_J = (0.6W)(110°C/W) + 70°C = 136°C$

The maximum junction temperature for the LT1969 is 150°C so the heat sinking capability of the board is adequate for the application.

If the copper area on the PC board is reduced to 0 sq. mm the thermal resistance increases to 140°C/W and the junction temperature becomes:

$T_J = (0.6W)(140°C/W) + 70°C = 154°C$

which is above the maximum junction temperature indicating that the heat sinking capability of the board is inadequate and should be increased.

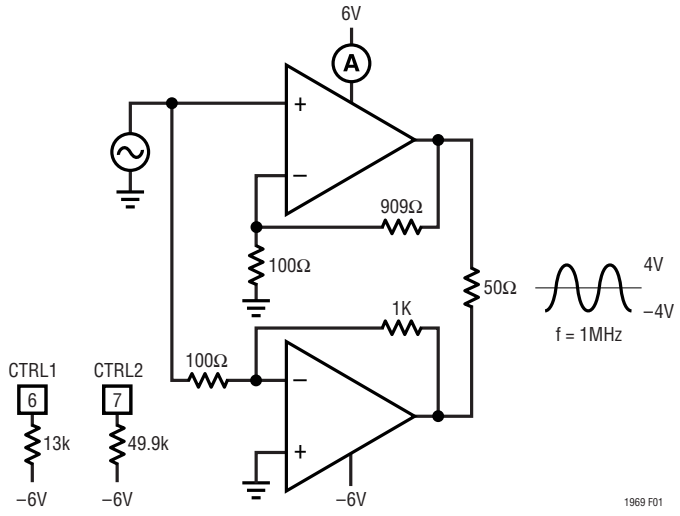

Figure 1. Thermal Calculation Example

APPLICATIONS INFORMATION

Capacitive Loading

The LT1969 is stable with a 1000pF capacitive load. The photo of the small-signal response with 1000pF load in a gain of 10 shows 50% overshoot. The photo of the large-signal response with a 1000pF load shows that the output slew rate is not limited by the short-circuit current. The Typical Performance Curve of Frequency Response vs Capacitive Load shows the peaking for various capacitive loads.

This stability is useful in the case of directly driving a coaxial cable or twisted pair that is inadvertently unterminated. For best pulse fidelity, however, a termination resistor of value equal to the characteristic impedance of the cable or twisted pair (i.e., 50Ω/75Ω/100Ω/135Ω) should be placed in series with the output. The other end of the cable or twisted pair should be terminated with the same value resistor to ground.

Compensation

The LT1969 is stable in a gain 10 or higher for any supply and resistive load. It is easily compensated for lower gains with a single resistor or a resistor plus a capacitor. Figure 2 shows that for inverting gains, a resistor from the inverting node to AC ground guarantees stability if the parallel combination of R_C and R_G is less than or equal to $R_F/9$. For lowest distortion and DC output offset, a series capacitor, C_C, can be used to reduce the noise gain at lower frequencies. The break frequency produced by R_C and C_C should be less than 15MHz to minimize peaking. The Typical Curve of Frequency Response vs Supply Voltage, A_V = –1 shows less than 1dB of peaking for a break frequency of 12.8MHz.

Figure 3 shows compensation in the noninverting configuration. The R_C, C_C network acts similarly to the inverting case. The input impedance is not reduced because the

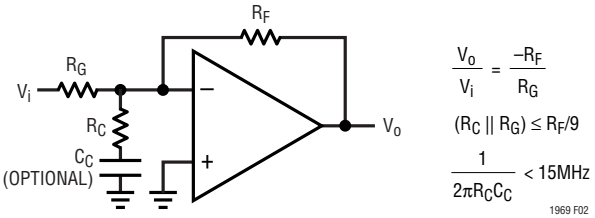

Figure 2. Compensation for Inverting Gains

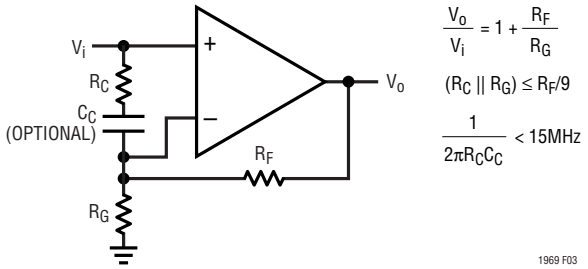

Figure 3. Compensation for Noninverting Gains

APPLICATIONS INFORMATION

network is bootstrapped. This network can also be placed between the inverting input and an AC ground.

Another compensation scheme for noninverting circuits is shown in Figure 4. The circuit is unity gain at low frequency and a gain of $1 + R_F/R_G$ at high frequency. The DC output offset is reduced by a factor of ten. The techniques of Figures 3 and 4 can be combined as shown in Figure 5. The gain is unity at low frequencies, $1 + R_F/R_G$ at mid-band and for stability, a gain of 10 or greater at high frequencies.

Output Loading

The LT1969 output stage is very wide bandwidth and able to source and sink large currents. Reactive loading, even isolated with a back-termination resistor, can cause ringing at frequencies of hundreds of MHz. For this reason, any design should be evaluated over a wide range of output conditions. To reduce the effects of reactive loading, an optional snubber network consisting of a series RC across the load can provide a resistive load at high frequency. Another option is to filter the drive to the load. If a back-termination resistor is used, a capacitor to ground at the load can eliminate ringing.

Line Driving Back-Termination

The standard method of cable or line back-termination is shown in Figure 6. The cable/line is terminated in its characteristic impedance (50Ω, 75Ω, 100Ω, 135Ω, etc.). A back-termination resistor also equal to to the chararacteristic impedance should be used for maximum pulse fidelity of outgoing signals, and to terminate the line for incoming signals in a full-duplex application. There are three main drawbacks to this approach. First, the power dissipated in the load and back-termination resistors is equal so half of the power delivered by the amplifier is

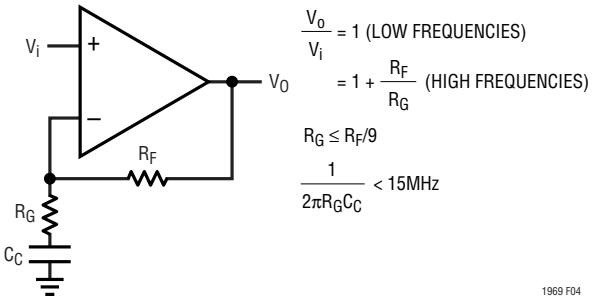

Figure 4. Alternate Noninverting Compensation

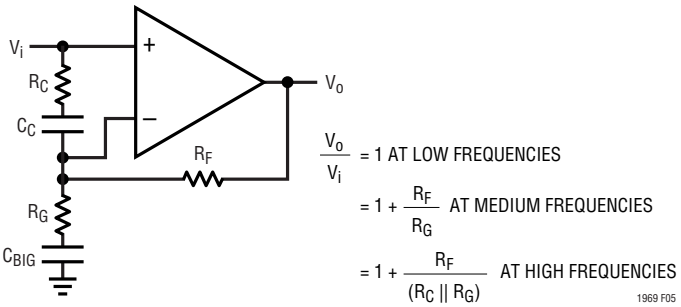

Figure 5. Combination Compensation

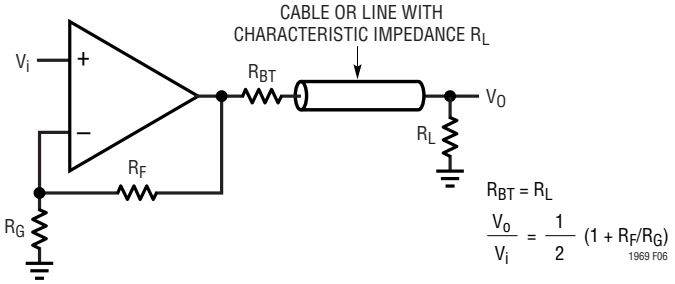

Figure 6. Standard Cable/Line Back-Termination

APPLICATIONS INFORMATION

wasted in the termination resistor. Second, the signal is halved so the gain of the amplifer must be doubled to have the same overall gain to the load. The increase in gain increases noise and decreases bandwidth (which can also increase distortion). Third, the output swing of the amplifier is doubled which can limit the power it can deliver to the load for a given power supply voltage.

An alternate method of back-termination is shown in Figure 7. Positive feedback increases the effective back-termination resistance so R_{BT} can be reduced by a factor of n. To analyze this circuit, first ground the input. As $R_{BT} = R_L/n$, and assuming $R_{P2} >> R_L$ we require that:

$V_a = V_o\ (1 - 1/n)$ to increase the effective value of R_{BT} by n.

$V_p = V_o\ (1 - 1/n)/(1 + R_F/R_G)$

$V_o = V_p\ (1 + R_{P2}/R_{P1})$

Eliminating Vp, we get the following:

$$(1 + R_{P2}/R_{P1}) = (1 + R_F/R_G)/(1 - 1/n)$$

For example, reducing R_{BT} by a factor of n = 4, and with an amplifer gain of $(1 + R_F/R_G) = 10$ requires that $R_{P2}/R_{P1} = 12.3$.

Note that the overall gain is increased:

$$\frac{V_o}{V_i} = \frac{R_{P2}/(R_{P2}+R_{P1})}{\left[(1+1/n)/(1+R_F/R_G)\right] - \left[R_{P1}/(R_{P2}+R_{P1})\right]}$$

A simpler method of using positive feedback to reduce the back-termination is shown in Figure 8. In this case, the drivers are driven differentially and provide complementary outputs. Grounding the inputs, we see there is inverting gain of $-R_F/R_P$ from $-V_o$ to V_a

$$V_a = V_o\ (R_F/R_P)$$

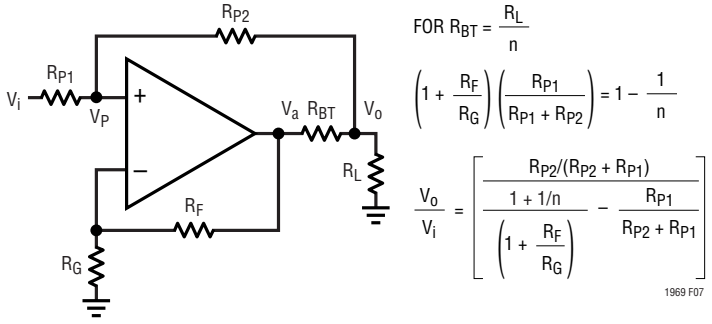

Figure 7. Back-Termination Using Positive Feedback

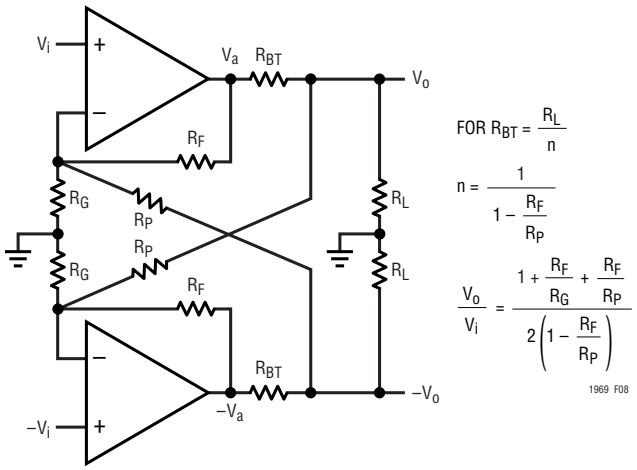

Figure 8. Back-Termination Using Differential Positive Feedback

APPLICATIONS INFORMATION

and assuming $R_P >> R_L$, we require

$$V_a = V_o (1 – 1/n)$$

solving

$$R_F/R_P = 1 – 1/n$$

So to reduce the back-termination by a factor of 3 choose $R_F/R_P = 2/3$. Note that the overall gain is increased to:

$$V_o/V_i = (1 + R_F/R_G + R_F/R_P)/[2(1 – R_F/R_P)]$$

ADSL Driver Requirements

The LT1969 is an ideal choice for ADSL upstream (CPE) modems. The key advantages are: ±200mA output drive with only 1.7V worst-case total supply voltage headroom, high bandwidth, which helps achieve low distortion, low quiescent supply current of 7mA per amplifier and a space-saving, thermally enhanced MS10 package.

An ADSL remote terminal driver must deliver an average power of 13dBm (20mW) into a 100Ω line. This corresponds to $1.41V_{RMS}$ into the line. The DMT-ADSL peak-to-average ratio of 5.33 implies voltage peaks of 7.53V into the line. Using a differential drive configuration and transformer coupling with standard back-termination, a transformer ratio of 1:2 is well suited. This is shown on the front page of this data sheet along with the distortion performance vs line voltage at 200kHz, which is beyond ADSL requirements. Note that the distortion is better than –73dBc for all swings up to $16V_{P-P}$ into the line. The gain of this circuit from the differential inputs to the line voltage is 10. Lower gains are easy to implement using the compensation techniques of Figure 5. Table 2 shows the drive requirements for this standard circuit.

Table 2. ADSL Upstream Driver Designs

	STANDARD	LOW POWER
Line Impedance	100Ω	100Ω
Line Power	13dBm	13dBm
Peak-to-Average Ratio	5.33	5.33
Transformer Turns Ratio	2	1
Reflected Impedance	25Ω	100Ω
Back-Termination Resistors	12.5Ω	8.35Ω
Transformer Insertion Loss	1dB	0.5dB
Average Amplifier Swing	$0.79V_{RMS}$	$0.87V_{RMS}$
Average Amplifier Current	$31.7mA_{RMS}$	$15mA_{RMS}$
Peak Amplifier Swing	4.21V Peak	4.65V Peak
Peak Amplifier Current	169mA Peak	80mA Peak
Total Average Power Consumption	550mW	350mW
Supply Voltage	Single 12V	Single 12V

The above design is an excellent choice for desktop applications and draws typically 550mW of power. For portable applications, power savings can be achieved by reducing the back-termination resistor using positive feedback as shown in Figure 9. The overall gain of this circuit

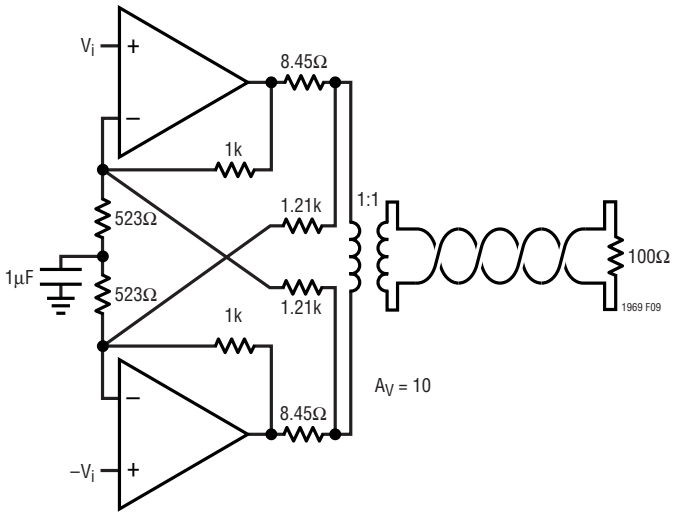

Figure 9. Power Saving ADSL Modem Driver

APPLICATIONS INFORMATION

is also 10, but the power consumption has been reduced to 350mW, a savings of 36% over the previous design. Note that the reduction of the back-termination resistor has allowed use of a 1:1 transformer ratio.

Table 2 compares the two approaches. It may seem that the low power design is a clear choice, but there are further system issues to consider. In addition to driving the line, the amplifiers provide back-termination for signals that are received simultaneously from the line. In order to reject the drive signal, a receiver circuit is used such as shown in Figure 10. Taking advantage of the differential nature of the signals, the receiver can subtract out the drive signal and amplify the received signal. This method works well for standard back-termination. If the back-termination resistors are reduced by positive feedback, a portion of the received signal also appears at the amplifier outputs. The result is that the received signal is attenuated by the same amount as the reduction in the back-termination resistor. Taking into account the different transformer turns ratios, the received signal of the low power design will be one third of the standard design received signal. The reduced signal has system implications for the sensitivity of the receiver. The power reduction may, or may not, be an acceptable system tradeoff for a given design.

Controlling the Quiescent Current

The quiescent current of the LT1969 is controlled via two control pins, CTRL1 and CTRL2. The pins can be used to either turn off the amplifiers, reducing the quiescent current on ±2.5V supplies to less than 500µA per amplifier, or to control the quiescent current in normal operation.

Figure 11 shows how the control pins are used in conjunction with external resistors to program the supply current. In normal operation, each control pin is biased to approximately 1V above V^- and by varying the resistor values, the current from each control pin can be adjusted. It is this current that sets the supply current of both amplifiers. If one of the resistors is open, i.e. R2, the supply current of the amplifiers will be set by CTRL1 and R1. Figure 12 shows supply current vs resistor value.

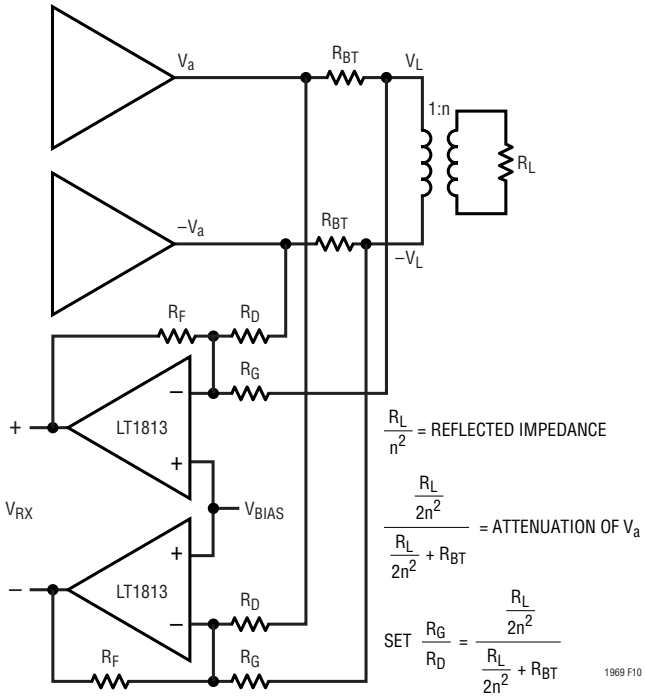

Figure 10. Receiver Configuration

APPLICATIONS INFORMATION

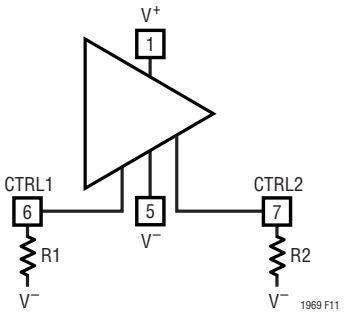

Figure 11

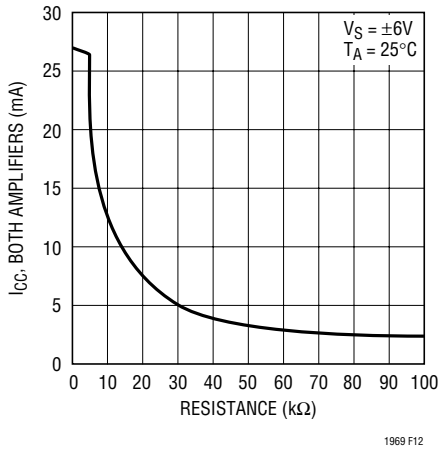

Figure 12. Supply Current vs Control Resistance (R1//R2)

Using CTRL1 and CTRL2 to set the supply current effectively places R1 and R2 in parallel obtaining a net resistance, and Figure 12 can still be utilized in determining supply current.

The use of two pins to control the supply current allows for applications where external logic can be used to place the amplifiers in different supply current modes. Figure 13 illustrates a partial shutdown with direct logic on each control pin. If both logic inputs are low, the control pins will effectively see a resistance of 13k//49.9k = 10k to V^-. This will set the amplifiers in nominal mode with a gain bandwidth of 700MHz and ±200mA minimum I_{OUT}. The electrical characteristics are specified in nominal mode. Forcing R1's input logic high will partially shut down the part, putting it in a low power mode. By keeping the output stage slightly biased, the output impedance

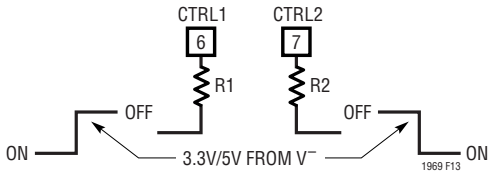

Figure 13

remains low, preserving the line termination. The Typical Performance Characteristics curve Output Impedance vs Supply Current shows the details. Both logic inputs high further reduces the supply current and places the part in a "standby" mode with less than 500µA per amplifier quiescent current.

Output Loading in Low Current Modes

The LT1969 output stage has a very wide bandwidth and is able to source and sink large amounts of current. The internal circuitry of the output stage incorporates a positive feedback boost loop giving it high drive capability. As the supply current is reduced, the sourcing drive capability also reduces. Maximum sink current is independent of supply current and is limited by the short-circuit protection at 500mA. If the amplifier is in a low power or "standby" mode, the output stage is slightly biased and is not capable of sourcing high output currents. The Typical Performance Characteristics curve Maximum I_{OUT} Sourcing vs Quiescent Current shows the maximum output current for a given quiescent current.

Considerations for Fault Protection

The basic line driver design presents a direct DC path between the outputs of the two amplifiers. An imbalance in the DC biasing potentials at the noninverting inputs through either a fault condition or during turn-on of the system can create a DC voltage differential between the two amplifier outputs. This condition can force a considerable amount of current, 500mA or more, to flow as it is limited only by the small valued back-termination resistors and the DC resistance of the transformer primary. This high current can possibly cause the power supply voltage source to drop significantly impacting overall

APPLICATIONS INFORMATION

system performance. If left unchecked, the high DC current can heat the LT1969 to destruction.

Using DC blocking capacitors to AC couple the signal to the transformer eliminates the possibility for DC current to flow under any conditions. These capacitors should be sized large enough to not impair the frequency response characteristics required for the data transmission.

Another important fault related concern has to do with very fast high voltage transients appearing on the telephone line (lightning strikes for example). TransZorbs™, varistors and other transient protection devices are often used to absorb the transient energy, but in doing so also create fast voltage transitions themselves that can be coupled through the transformer to the outputs of the line driver. Several hundred volt transient signals can appear at the primary windings of the transformer with current into the driver outputs limited only by the back termination resistors. While the LT1969 has clamps to the supply rails at the output pins, they may not be large enough to handle the significant transient energy. External clamping diodes, such as BAV99s, at each end of the transformer primary help to shunt this destructive transient energy away from the amplifier outputs.

TransZorb is a registered trademark of General Instruments, GSI

PACKAGE DESCRIPTION

Dimensions in inches (millimeters) unless otherwise noted.

MS10 Package
10-Lead Plastic MSOP
(LTC DWG # 05-08-1661)

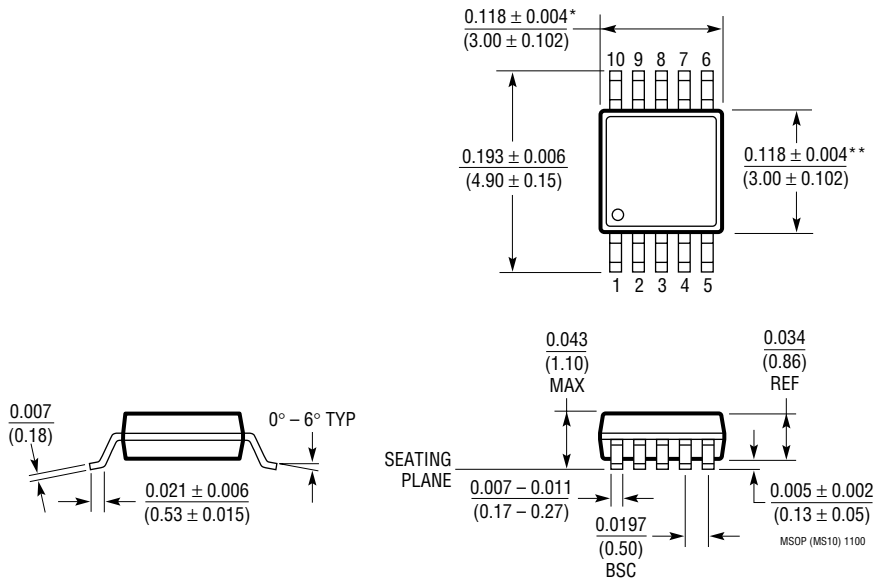

* DIMENSION DOES NOT INCLUDE MOLD FLASH, PROTRUSIONS OR GATE BURRS. MOLD FLASH, PROTRUSIONS OR GATE BURRS SHALL NOT EXCEED 0.006" (0.152mm) PER SIDE

** DIMENSION DOES NOT INCLUDE INTERLEAD FLASH OR PROTRUSIONS. INTERLEAD FLASH OR PROTRUSIONS SHALL NOT EXCEED 0.006" (0.152mm) PER SIDE

Information furnished by Linear Technology Corporation is believed to be accurate and reliable. However, no responsibility is assumed for its use. Linear Technology Corporation makes no representation that the interconnection of its circuits as described herein will not infringe on existing patent rights.

TYPICAL APPLICATION

Split Supply ±5V ADSL CPE Line Driver

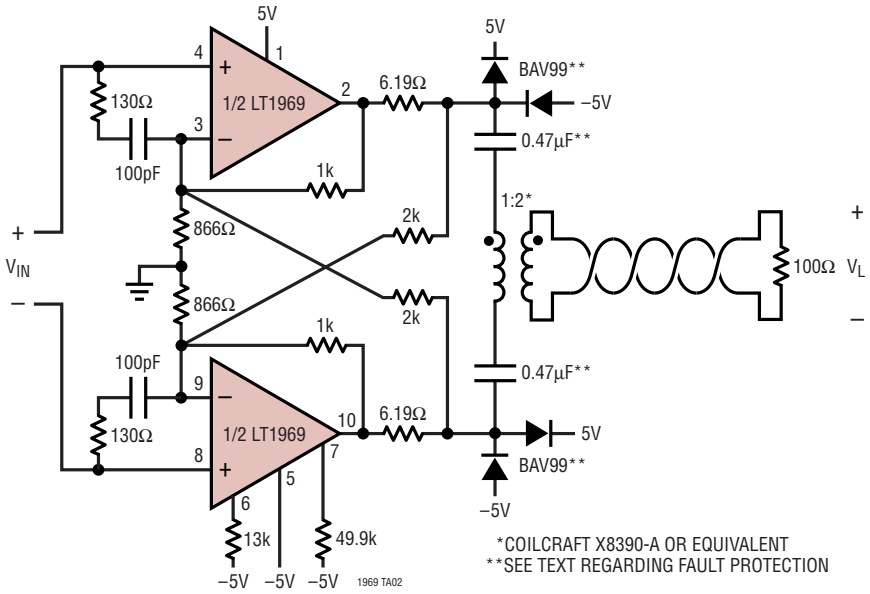

$\frac{V_L}{V_{IN}} = 5$ (ASSUME 0.5dB TRANSFORMER POWER LOSS)

REFLECTED LINE IMPEDANCE = $100\Omega / 2^2 = 25\Omega$

EFFECTIVE TERMINATION = $2 \bullet 6.19 \bullet \frac{2k\Omega}{1k\Omega} = 24.8\Omega$

EACH AMPLIFIER: $0.56V_{RMS}$, $29.9mA_{RMS}$
±3V PEAK, ±160mA PEAK

RELATED PARTS

PART NUMBER	DESCRIPTION	COMMENTS
LT1207	Dual 250mA, 60MHz Current Feedback Amplifier	Shutdown/Current Set Function
LT1396	Dual 400MHz, 800V/µs Current Feedback Amplifier	4.6mA Supply Current Set, 80mA I_{OUT}
LT1497	Dual 125mA, 50MHz Current Feedback Amplifier	900V/µs Slew Rate
LT1795	Dual 500mA, 50MHz Current Feedback Amplifier	Shutdown/Current Set Function, ADSL CO Driver
LT1886	Dual 700MHz, 200mA Op Amp	Gain of 10 Stable, Low Distortion

Linear Technology Corporation
1630 McCarthy Blvd., Milpitas, CA 95035-7417
(408)432-1900 • FAX: (408) 434-0507 • www.linear-tech.com
1969f LT/TP 0301 4K • PRINTED IN USA
© LINEAR TECHNOLOGY CORPORATION 2001