Dual 700MHz, 200mA Operational Amplifier

FEATURES

- **700MHz Gain Bandwidth**
- **±200mA Minimum I_{OUT}**
- **Low Distortion: –72dBc at 1MHz, $4V_{P-P}$, 25Ω, A_V = 2**
- Stable in $A_V \geq 10$, Simple Compensation for $A_V < 10$
- ±4.3V Minimum Output Swing, V_S = ±6V, R_L = 25Ω
- 7mA Supply Current per Amplifier
- 200V/µs Slew Rate
- Stable with 1000pF Load
- 6nV/√Hz Input Noise Voltage
- 2pA/√Hz Input Noise Current
- 4mV Maximum Input Offset Voltage
- 4µA Maximum Input Bias Current
- 400nA Maximum Input Offset Current
- ±4.5V Minimum Input CMR, V_S = ±6V
- Specified at ±6V, ±2.5V

APPLICATIONS

- DSL Modems
- xDSL PCI Cards
- USB Modems
- Line Drivers

DESCRIPTION

The LT®1886 is a 200mA minimum output current dual op amp with outstanding distortion performance. The amplifiers are gain-of-ten stable, but can be easily compensated for lower gains. The LT1886 features balanced, high impedance inputs with 4µA maximum input bias current, and 4mV maximum input offset voltage. Single supply applications are easy to implement and have lower total noise than current feedback amplifier implementations.

The output drives a 25Ω load to ±4.3V with ±6V supplies. On ±2.5V supplies the output swings ±1.5V with a 100Ω load. The amplifier is stable with a 1000pF capacitive load which makes it useful in buffer and cable driver applications.

The LT1886 is manufactured on Linear Technology's advanced low voltage complementary bipolar process and is available in a thermally enhanced SO-8 package.

LT, LTC and LT are registered trademarks of Linear Technology Corporation.

TYPICAL APPLICATION

Single 12V Supply ADSL Modem Line Driver

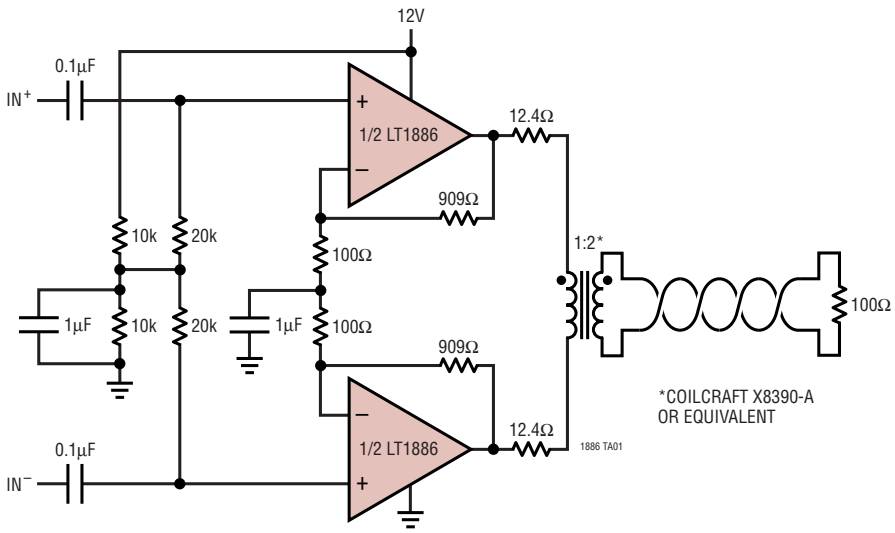

ADSL Modem Line Driver Distortion

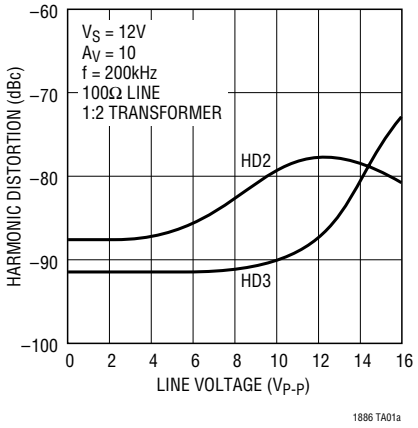

ABSOLUTE MAXIMUM RATINGS

(Note 1)

Total Supply Voltage (V^+ to V^-) 13.2V
Input Current (Note 2) ..... ±10mA
Input Voltage (Note 2) ..... $\pm V_S$
Maximum Continuous Output Current (Note 3)
DC ..... ±100mA
AC ..... ±300mA
Operating Temperature Range (Note 10) –40°C to 85°C
Specified Temperature Range (Note 9) .. –40°C to 85°C
Maximum Junction Temperature ..... 150°C
Storage Temperature Range ..... –65°C to 150°C
Lead Temperature (Soldering, 10 sec)..... 300°C

PACKAGE/ORDER INFORMATION

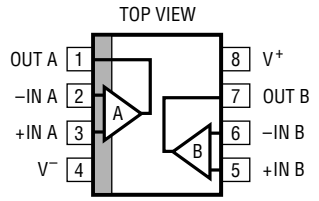

S8 PACKAGE
8-LEAD PLASTIC SO

T_{JMAX} = 150°C, θ_{JA} = 80°C/W (Note 4)

ORDER PART NUMBER
LT1886CS8
S8 PART MARKING
1886

Consult factory for parts specified with wider operating temperature ranges.

ELECTRICAL CHARACTERISTICS

The ● denotes specifications which apply over the full operating temperature range, otherwise specifications are at T_A = 25°C. V_S = ±6V, V_{CM} = 0V, pulse power tested unless otherwise noted. (Note 9)

SYMBOL	PARAMETER	CONDITIONS		MIN	TYP	MAX	UNITS
V_{OS}	Input Offset Voltage	(Note 5)	 ●		1	4 5	mV mV
	Input Offset Voltage Drift	(Note 8)	●		3	17	µV/°C
I_{OS}	Input Offset Current		 ●		150	400 600	nA nA
I_B	Input Bias Current		 ●		1.5	4 6	µA µA
e_n	Input Noise Voltage	f = 10kHz			6		nV/√Hz
i_n	Input Noise Current	f = 10kHz			2		pA/√Hz
R_{IN}	Input Resistance	V_{CM} = ±4.5V Differential		5	10 35		MΩ kΩ
C_{IN}	Input Capacitance				2		pF
	Input Voltage Range (Positive) Input Voltage Range (Negative)		● ●	4.5	5.9 –5.2	 –4.5	V V
CMRR	Common Mode Rejection Ratio	V_{CM} = ±4.5V	●	77	98		dB
	Minimum Supply Voltage	Guaranteed by PSRR	●			±2	V
PSRR	Power Supply Rejection Ratio	V_S = ±2V to ±6.5V	 ●	80 78	86		dB dB
A_{VOL}	Large-Signal Voltage Gain	V_{OUT} = ±4V, R_L = 100Ω	 ●	5.0 4.5	12		V/mV V/mV
		V_{OUT} = ±4V, R_L = 25Ω	 ●	4.5 4.0	12		V/mV V/mV
V_{OUT}	Output Swing	R_L = 100Ω, 10mV Overdrive	 ●	4.85 4.70	5		±V ±V
		R_L = 25Ω, 10mV Overdrive	 ●	4.30 4.10	4.6		±V ±V
		I_{OUT} = 200mA, 10mV Overdrive	 ●	4.30 4.10	4.5		±V ±V
I_{SC}	Short-Circuit Current (Sourcing) Short-Circuit Current (Sinking)	(Note 3)			800 500		mA mA

ELECTRICAL CHARACTERISTICS

The ● denotes specifications which apply over the full operating temperature range, otherwise specifications are at T_A = 25°C. V_S = ±6V, V_{CM} = 0V, pulse power tested unless otherwise noted. (Note 9)

SYMBOL	PARAMETER	CONDITIONS		MIN	TYP	MAX	UNITS
SR	Slew Rate	A_V = –10 (Note 6)	 ●	133 110	200		V/µs V/µs
	Full Power Bandwidth	4V Peak (Note 7)			8		MHz
GBW	Gain Bandwidth	f = 1MHz			700		MHz
t_r, t_f	Rise Time, Fall Time	A_V = 10, 10% to 90% of 0.1V, R_L = 100Ω			4		ns
	Overshoot	A_V = 10, 0.1V, R_L = 100Ω			1		%
	Propagation Delay	A_V = 10, 50% V_{IN} to 50% V_{OUT}, 0.1V, R_L = 100Ω			2.5		ns
t_S	Settling Time	6V Step, 0.1%			50		ns
	Harmonic Distortion	HD2, A_V = 10, $2V_{P-P}$, f = 1MHz, R_L = 100Ω/25Ω HD3, A_V = 10, $2V_{P-P}$, f = 1MHz, R_L = 100Ω/25Ω			–75/–63 –85/–71		dBc dBc
IMD	Intermodulation Distortion	A_V = 10, f = 0.9MHz, 1MHz, 14dBm, R_L = 100Ω/25Ω			–81/–80		dBc
R_{OUT}	Output Resistance	A_V = 10, f = 1MHz			0.1		Ω
	Channel Separation	V_{OUT} = ±4V, R_L = 25Ω	 ●	82 80	92		dB dB
I_S	Supply Current	Per Amplifier	 ●		7	8.25 8.50	mA mA

The ● denotes specifications which apply over the full operating temperature range, otherwise specifications are at T_A = 25°C. V_S = ±2.5V, V_{CM} = 0V, pulse power tested unless otherwise noted. (Note 9)

SYMBOL	PARAMETER	CONDITIONS		MIN	TYP	MAX	UNITS
V_{OS}	Input Offset Voltage	(Note 5)	 ●		1.5	5 6	mV mV
	Input Offset Voltage Drift	(Note 8)	●		5	17	µV/°C
I_{OS}	Input Offset Current		 ●		100	350 550	nA nA
I_B	Input Bias Current		 ●		1.2	3.5 5.5	µA µA
e_n	Input Noise Voltage	f = 10kHz			6		nV/√Hz
i_n	Input Noise Current	f = 10kHz			2		pA/√Hz
R_{IN}	Input Resistance	V_{CM} = ±1V Differential		10	20 50		MΩ kΩ
C_{IN}	Input Capacitance				2		pF
	Input Voltage Range (Positive) Input Voltage Range (Negative)		● ●	1	2.4 –1.7	 –1	V V
CMRR	Common Mode Rejection Ratio	V_{CM} = ±1V	●	75	91		dB
A_{VOL}	Large-Signal Voltage Gain	V_{OUT} = ±1V, R_L = 100Ω	 ●	5.0 4.5	10		V/mV V/mV
		V_{OUT} = ±1V, R_L = 25Ω	 ●	4.5 4.0	10		V/mV V/mV
V_{OUT}	Output Swing	R_L = 100Ω, 10mV Overdrive	 ●	1.50 1.40	1.65		±V ±V
		R_L = 25Ω, 10mV Overdrive	 ●	1.35 1.25	1.50		±V ±V
		I_{OUT} = 200mA, 10mV Overdrive	 ●	0.87 0.80	1		±V ±V

ELECTRICAL CHARACTERISTICS

The ● denotes specifications which apply over the full operating temperature range, otherwise specifications are at T_A = 25°C. V_S = ±2.5V, V_{CM} = 0V, pulse power tested unless otherwise noted. (Note 9)

SYMBOL	PARAMETER	CONDITIONS		MIN	TYP	MAX	UNITS
I_{SC}	Short-Circuit Current (Sourcing) Short-Circuit Current (Sinking)	(Note 3)			600 400		mA mA
SR	Slew Rate	A_V = –10 (Note 6)	 ●	66 60	100		V/µs V/µs
	Full Power Bandwidth	1V Peak (Note 7)			16		MHz
GBW	Gain Bandwidth	f = 1MHz			530		MHz
t_r, t_f	Rise Time, Fall Time	A_V = 10, 10% to 90% of 0.1V, R_L = 100Ω			7		ns
	Overshoot	A_V = 10, 0.1V, R_L = 100Ω			5		%
	Propagation Delay	A_V = 10, 50% V_{IN} to 50% V_{OUT}, 0.1V, R_L = 100Ω			5		ns
	Harmonic Distortion	HD2, A_V = 10, $2V_{P-P}$, f = 1MHz, R_L = 100Ω/25Ω HD3, A_V = 10, $2V_{P-P}$, f = 1MHz, R_L = 100Ω/25Ω			–75/–64 –80/–66		dBc dBc
IMD	Intermodulation Distortion	A_V = 10, f = 0.9MHz, 1MHz, 5dBm, R_L = 100Ω/25Ω			–77/–85		dBc
R_{OUT}	Output Resistance	A_V = 10, f = 1MHz			0.2		Ω
	Channel Separation	V_{OUT} = ±1V, R_L = 25Ω	 ●	82 80	92		dB dB
I_S	Supply Current	Per Amplifier	 ●		5	5.75 6.25	mA mA

Note 1: Absolute Maximum Ratings are those values beyond which the life of a device may be impaired.

Note 2: The inputs are protected by back-to-back diodes. If the differential input voltage exceeds 0.7V, the input current should be limited to less than 10mA.

Note 3: A heat sink may be required to keep the junction temperature below absolute maximum.

Note 4: Thermal resistance varies depending upon the amount of PC board metal attached to the device. θ_{JA} is specified for a 2500mm^2 test board covered with 2 oz copper on both sides.

Note 5: Input offset voltage is exclusive of warm-up drift.

Note 6: Slew rate is measured between ±2V on a ±4V output with ±6V supplies, and between ±1V on a ±1.5V output with ±2.5V supplies.

Note 7: Full power bandwidth is calculated from the slew rate: FPBW = SR/2πV_P.

Note 8: This parameter is not 100% tested.

Note 9: The LT1886C is guaranteed to meet specified performance from 0°C to 70°C. The LT1886C is designed, characterized and expected to meet specified performance from –40°C to 85°C but is not tested or QA sampled at these temperatures. For guaranteed I-grade parts, consult the factory.

Note 10: The LT1886C is guaranteed functional over the operating temperature range of –40°C to 85°C.

TYPICAL PERFORMANCE CHARACTERISTICS

Supply Current vs Temperature

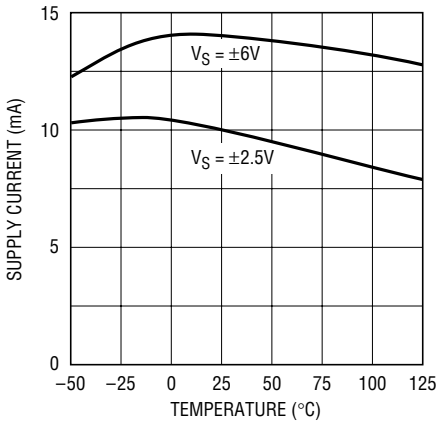

Input Common Mode Range vs Supply Voltage

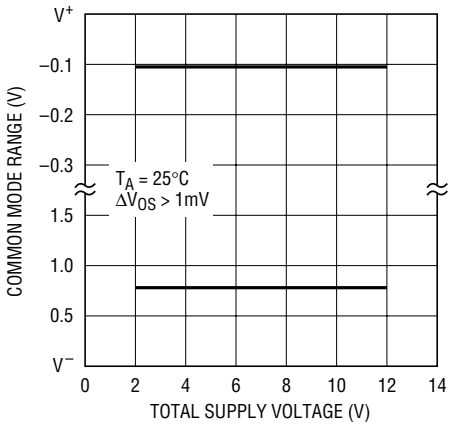

Input Bias Current vs Input Common Mode Voltage

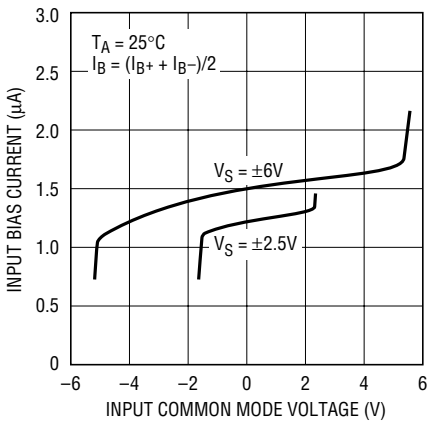

TYPICAL PERFORMANCE CHARACTERISTICS

Input Bias Current vs Temperature

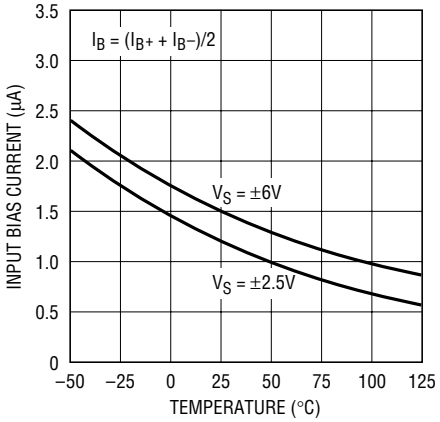

1886 G04

Input Noise Spectral Density

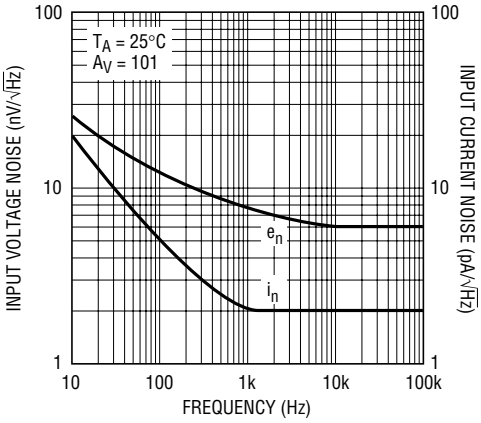

1886 G05

Output Short-Circuit Current vs Temperature

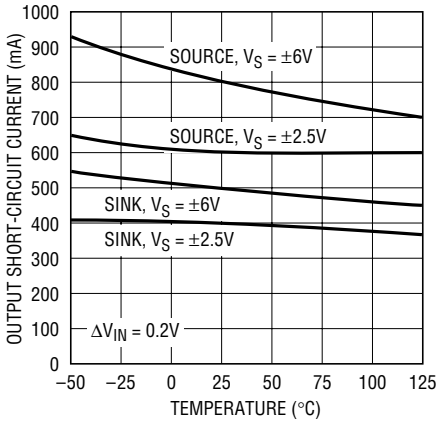

1886 G06

Output Saturation Voltage vs Temperature, $V_S = \pm 6V$

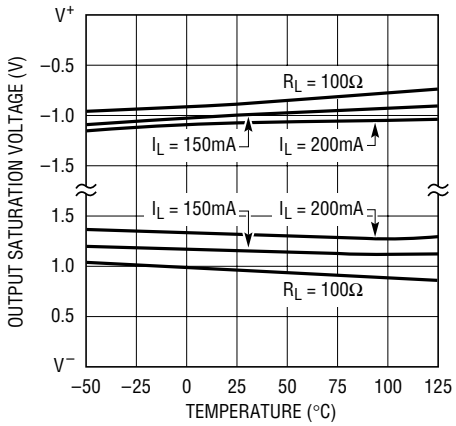

1886 G07

Output Saturation Voltage vs Temperature, $V_S = \pm 2.5V$

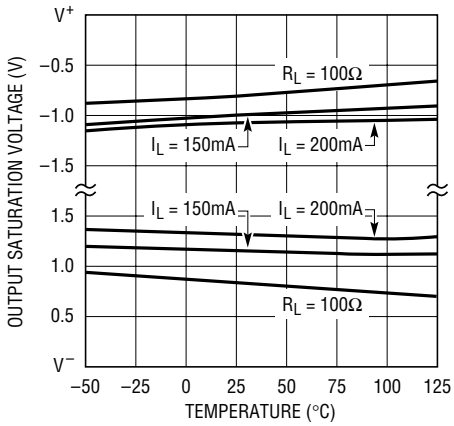

1886 G08

Settling Time vs Output Step

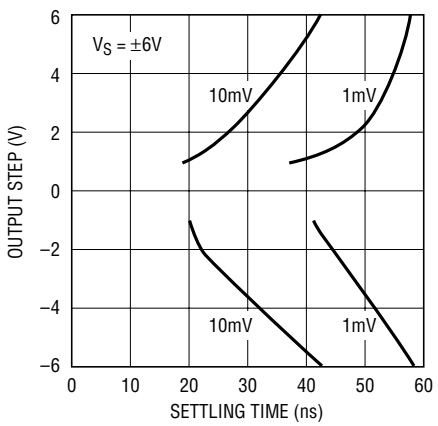

1886 G09

Gain and Phase vs Frequency

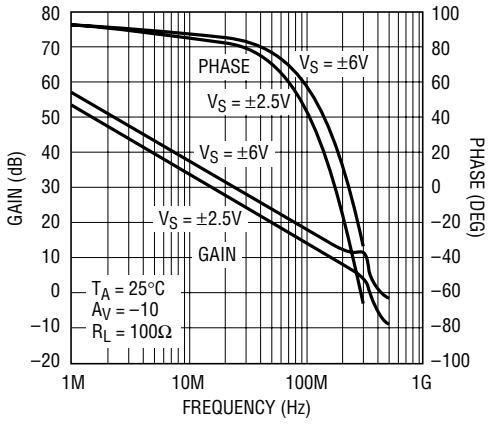

1886 G10

Gain Bandwidth vs Supply Voltage

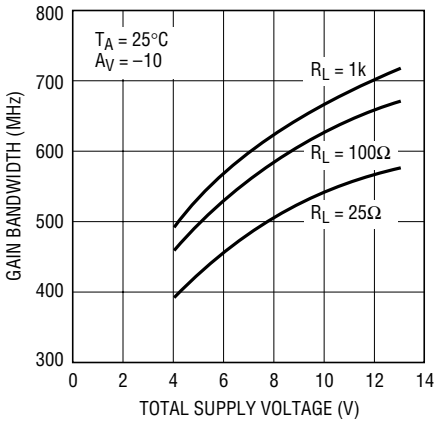

1886 G11

Output Impedance vs Frequency

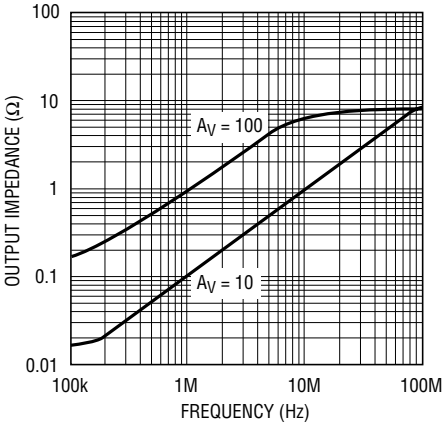

1886 G12

TYPICAL PERFORMANCE CHARACTERISTICS

Frequency Response vs Supply Voltage, $A_V = 10$

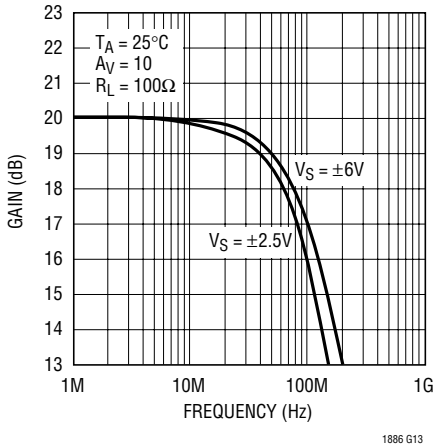

Frequency Response vs Supply Voltage, $A_V = -10$

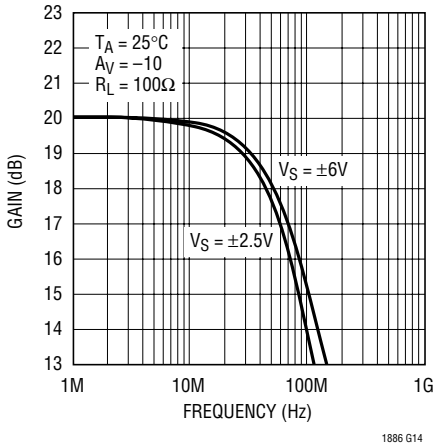

Frequency Response vs Supply Voltage, $A_V = 2$

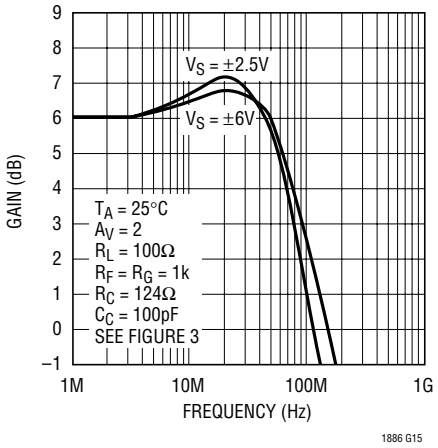

Frequency Response vs Supply Voltage, $A_V = -1$

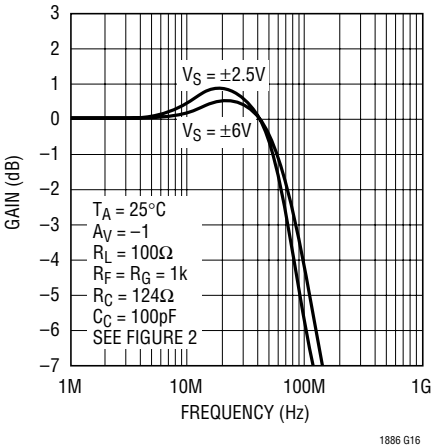

Frequency Response vs Capacitive Load

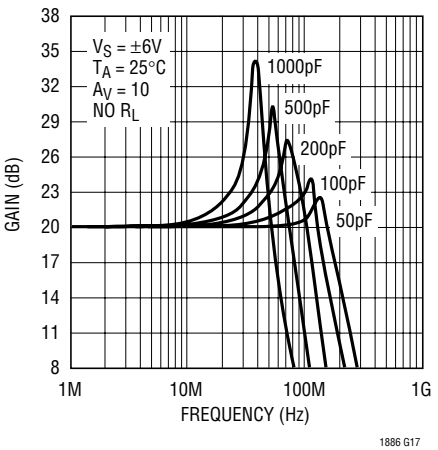

Slew Rate vs Temperature

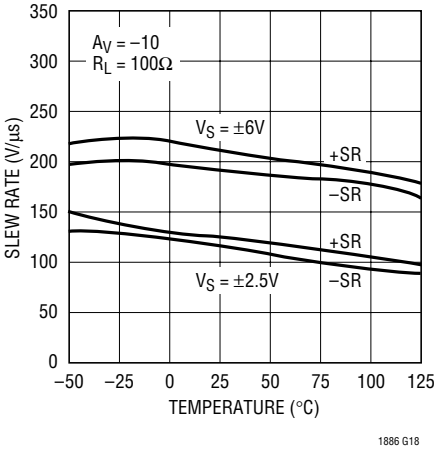

Power Supply Rejection vs Frequency

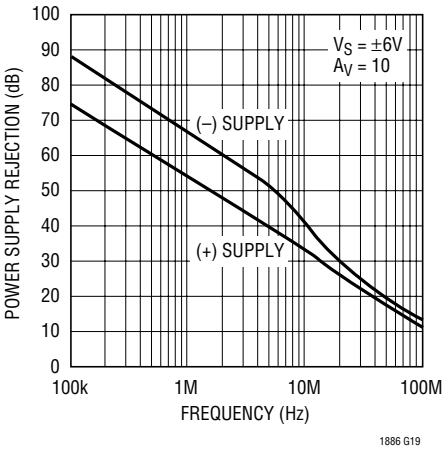

Common Mode Rejection Ratio vs Frequency

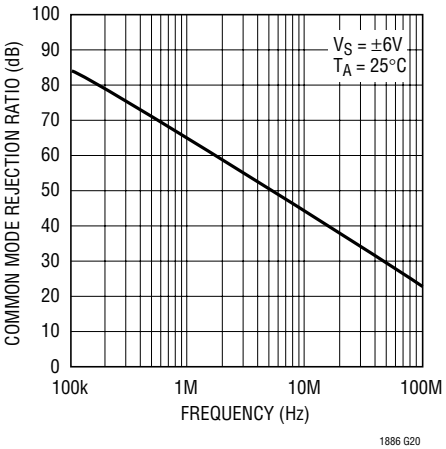

Amplifier Crosstalk vs Frequency

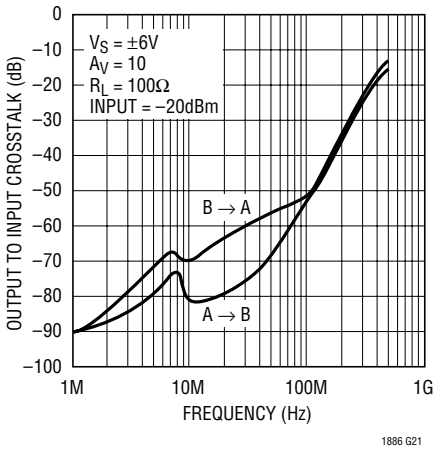

TYPICAL PERFORMANCE CHARACTERISTICS

Harmonic Distortion vs Frequency, $A_V = 10$, $V_S = \pm 6V$

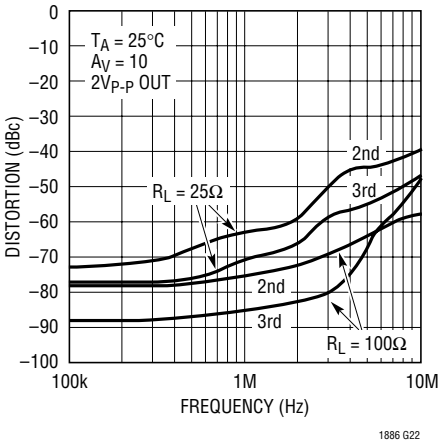

1886 G22

Harmonic Distortion vs Frequency, $A_V = 10$, $V_S = \pm 2.5V$

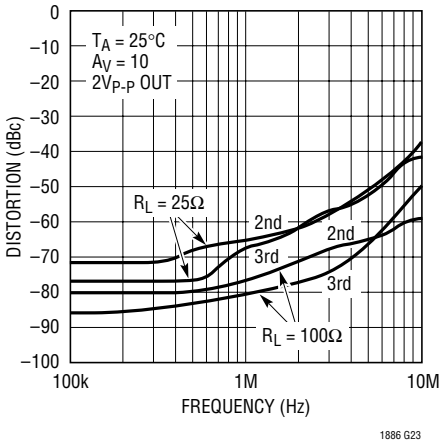

1886 G23

Harmonic Distortion vs Resistive Load

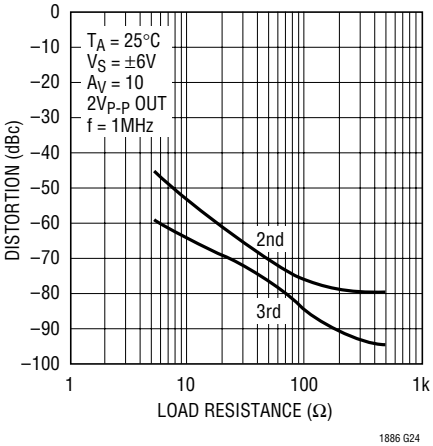

1886 G24

Harmonic Distortion vs Resistive Load

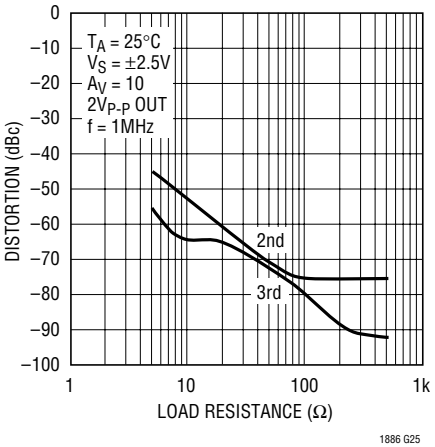

1886 G25

Harmonic Distortion vs Output Swing, $A_V = 10$, $V_S = \pm 6V$

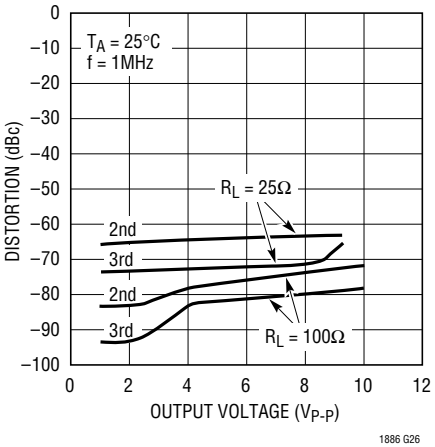

1886 G26

Harmonic Distortion vs Output Swing, $A_V = 10$, $V_S = \pm 2.5V$

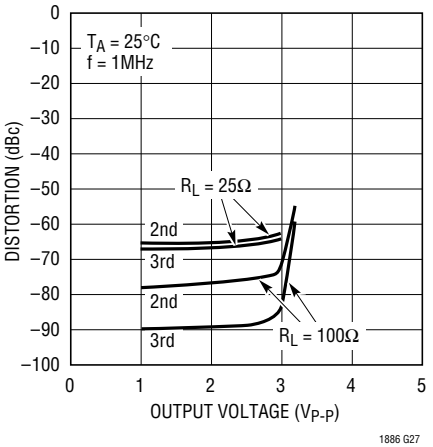

1886 G27

Harmonic Distortion vs Output Swing, $A_V = 2$, $V_S = \pm 6V$

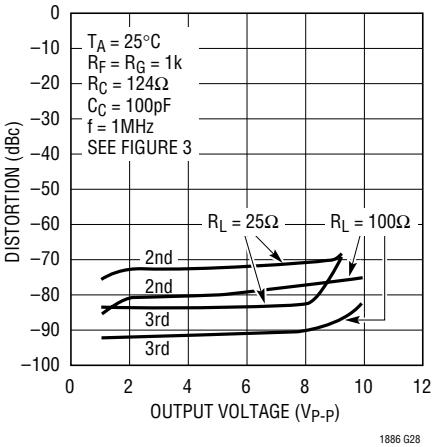

1886 G28

Harmonic Distortion vs Output Swing, $A_V = 2$, $V_S = \pm 2.5V$

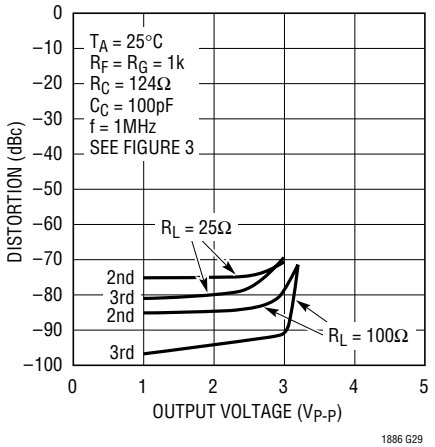

1886 G29

Harmonic Distortion vs Output Current, $V_S = \pm 6V$

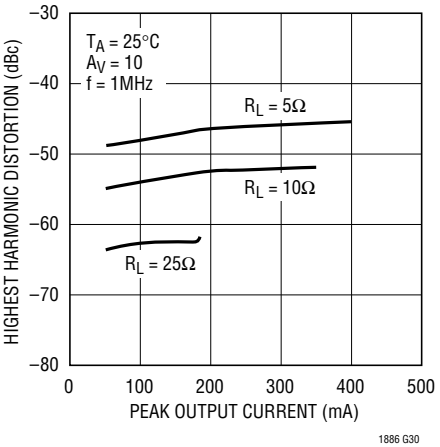

1886 G30

TYPICAL PERFORMANCE CHARACTERISTICS

Harmonic Distortion vs Output Current, $V_S = \pm 2.5V$

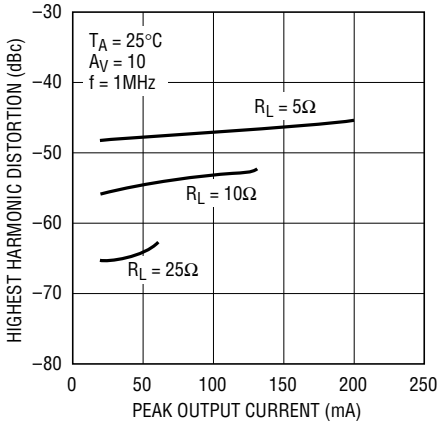

1886 G30

Undistorted Output Swing vs Frequency

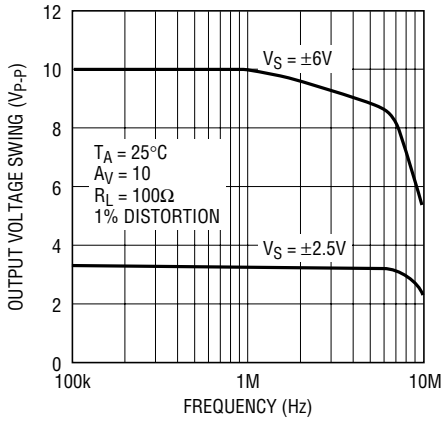

1886 G32

Small-Signal Transient, $A_V = 10$

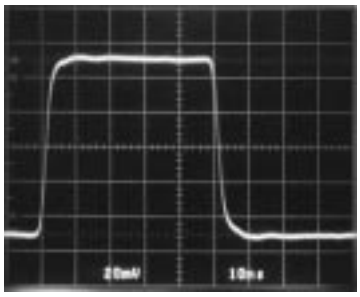

1886 G33

Small-Signal Transient, $A_V = -10$

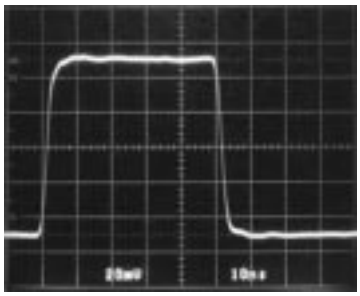

1886 G34

Small-Signal Transient, $A_V = 10$, $C_L = 1000pF$

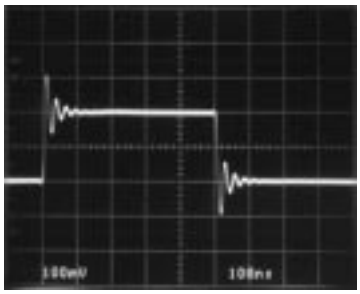

1886 G35

Large-Signal Transient, $A_V = 10$

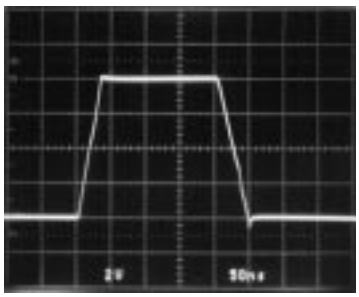

1886 G36

Large-Signal Transient, $A_V = -10$

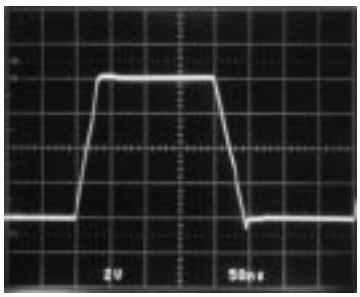

1886 G37

Large-Signal Transient, $A_V = 10$, $C_L = 1000pF$

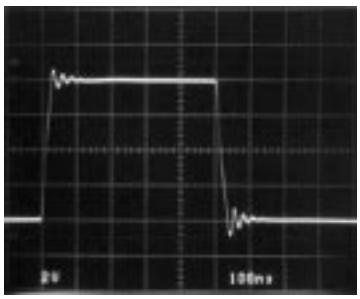

1886 G38

APPLICATIONS INFORMATION

Input Considerations

The inputs of the LT1886 are an NPN differential pair protected by back-to-back diodes (see the Simplified Schematic). There are no series protection resistors onboard which would degrade the input voltage noise. If the inputs can have a voltage difference of more than 0.7V, the input current should be limited to less than 10mA with external resistance (usually the feedback resistor or source resistor). Each input also has two ESD clamp diodes—one to each supply. If an input drive exceeds the supply, limit the current with an external resistor to less than 10mA.

The LT1886 design is a true operational amplifier with high impedance inputs and low input bias currents. The input offset current is a factor of ten lower than the input bias current. To minimize offsets due to input bias currents, match the equivalent DC resistance seen by both inputs. The low input noise current can significantly reduce total noise compared to a current feedback amplifier, especially for higher source resistances.

Layout and Passive Components

With a gain bandwidth product of 700MHz the LT1886 requires attention to detail in order to extract maximum performance. Use a ground plane, short lead lengths and a combination of RF-quality supply bypass capacitors (i.e., 470pF and 0.1µF). As the primary applications have high drive current, use low ESR supply bypass capacitors (1µF to 10µF). For best distortion performance with high drive current a capacitor with the shortest possible trace lengths should be placed between Pins 4 and 8. The optimum location for this capacitor is on the back side of the PC board. The DSL driver demo board (DC304) for this part uses a Taiyo Yuden 10µF ceramic (TMK432BJ106MM).

The parallel combination of the feedback resistor and gain setting resistor on the inverting input can combine with the input capacitance to form a pole which can cause frequency peaking. In general, use feedback resistors of 1kΩ or less.

Thermal Issues

The LT1886 enhanced θ_{JA} SO-8 package has the V^- pin fused to the lead frame. This thermal connection increases the efficiency of the PC board as a heat sink. The PCB material can be very effective at transmitting heat between the pad area attached to the V^- pin and a ground or power plane layer. Copper board stiffeners and plated through-holes can also be used to spread the heat generated by the device. Table 1 lists the thermal resistance for several different board sizes and copper areas. All measurements were taken in still air on 3/32" FR-4 board with 2oz copper. This data can be used as a rough guideline in estimating thermal resistance. The thermal resistance for each application will be affected by thermal interactions with other components as well as board size and shape.

Table 1. Fused 8-Lead SO Package

COPPER AREA (2oz)		TOTAL	
TOPSIDE	BACKSIDE	COPPER AREA	θJA
2500 sq. mm	2500 sq. mm	5000 sq. mm	80°C/W
1000 sq. mm	2500 sq. mm	3500 sq. mm	92°C/W
600 sq. mm	2500 sq. mm	3100 sq. mm	96°C/W
180 sq. mm	2500 sq. mm	2680 sq. mm	98°C/W
180 sq. mm	1000 sq. mm	1180 sq. mm	112°C/W
180 sq. mm	600 sq. mm	780 sq. mm	116°C/W
180 sq. mm	300 sq. mm	480 sq. mm	118°C/W
180 sq. mm	100 sq. mm	280 sq. mm	120°C/W
180 sq. mm	0 sq. mm	180 sq. mm	122°C/W

Calculating Junction Temperature

The junction temperature can be calculated from the equation:

$$T_J = (P_D)(\theta_{JA}) + T_A$$

T_J = Junction Temperature

T_A = Ambient Temperature

P_D = Device Dissipation

θ_{JA} = Thermal Resistance (Junction-to-Ambient)

As an example, calculate the junction temperature for the circuit in Figure 1 assuming an 85°C ambient temperature.

The device dissipation can be found by measuring the supply currents, calculating the total dissipation and then subtracting the dissipation in the load.

APPLICATIONS INFORMATION

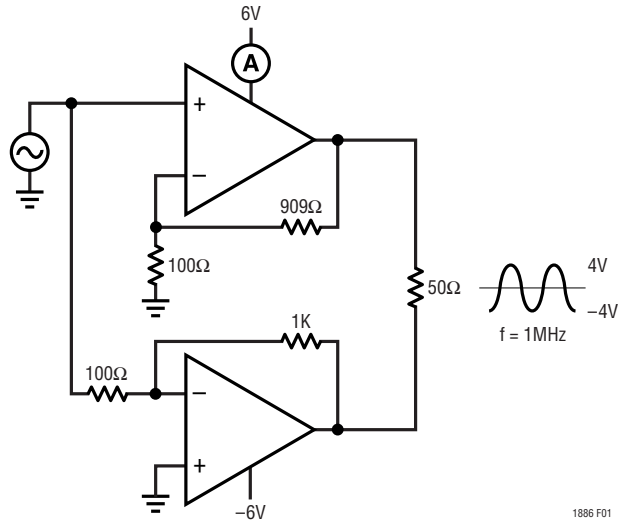

Figure 1. Thermal Calculation Example

The dissipation for the amplifiers is:

$$P_D = (63.5mA)(12V) – (4V/\sqrt{2})^2/(50) = 0.6W$$

The total package power dissipation is 0.6W. When a 2500 sq. mm PC board with 2oz copper on top and bottom is used, the thermal resistance is 80°C/W. The junction temperature T_J is:

$$T_J = (0.6W)(80°C/W) + 85°C = 133°C$$

The maximum junction temperature for the LT1886 is 150°C so the heat sinking capability of the board is adequate for the application.

If the copper area on the PC board is reduced to 180 sq. mm the thermal resistance increases to 122°C/W and the junction temperature becomes:

$$T_J = (0.6W)(122°C/W) + 85°C = 158°C$$

which is above the maximum junction temperature indicating that the heat sinking capability of the board is inadequate and should be increased.

Capacitive Loading

The LT1886 is stable with a 1000pF capacitive load. The photo of the small-signal response with 1000pF load in a gain of 10 shows 50% overshoot. The photo of the large-signal response with a 1000pF load shows that the output slew rate is not limited by the short-circuit current. The Typical Performance Curve of Frequency Response vs Capacitive Load shows the peaking for various capacitive loads.

This stability is useful in the case of directly driving a coaxial cable or twisted pair that is inadvertently unterminated. For best pulse fidelity, however, a termination resistor of value equal to the characteristic impedance of the cable or twisted pair (i.e., 50Ω/75Ω/100Ω/135Ω) should be placed in series with the output. The other end of the cable or twisted pair should be terminated with the same value resistor to ground.

Compensation

The LT1886 is stable in a gain 10 or higher for any supply and resistive load. It is easily compensated for lower gains with a single resistor or a resistor plus a capacitor. Figure 2 shows that for inverting gains, a resistor from the inverting node to AC ground guarantees stability if the parallel combination of R_C and R_G is less than or equal to $R_F/9$. For lowest distortion and DC output offset, a series capacitor, C_C, can be used to reduce the noise gain at lower frequencies. The break frequency produced by R_C and C_C should be less than 15MHz to minimize peaking. The Typical Curve of Frequency Response vs Supply Voltage, A_V = –1 shows less than 1dB of peaking for a break frequency of 12.8MHz.

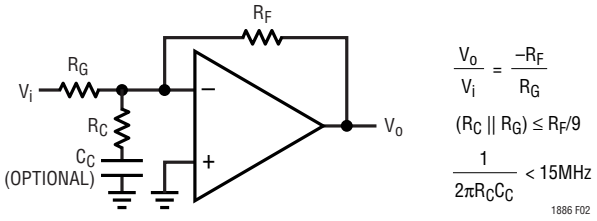

Figure 2. Compensation for Inverting Gains

Figure 3 shows compensation in the noninverting configuration. The R_C, C_C network acts similarly to the inverting case. The input impedance is not reduced because the network is bootstrapped. This network can also be placed between the inverting input and an AC ground.

Another compensation scheme for noninverting circuits is shown in Figure 4. The circuit is unity gain at low frequency and a gain of 1 + R_F/R_G at high frequency. The DC output offset is reduced by a factor of ten. The techniques of

APPLICATIONS INFORMATION

Figures 3 and 4 can be combined as shown in Figure 5. The gain is unity at low frequencies, $1 + R_F/R_G$ at mid-band and for stability, a gain of 10 or greater at high frequencies.

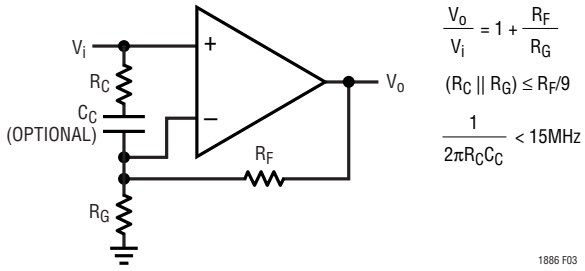

Figure 3. Compensation for Noninverting Gains

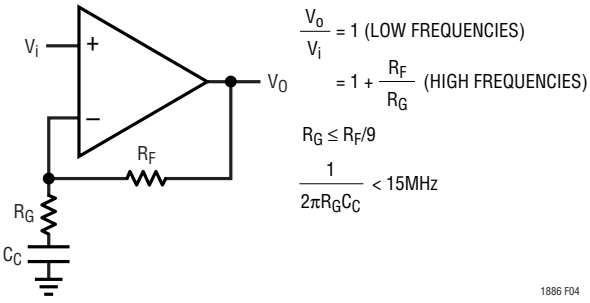

Figure 4. Alternate Noninverting Compensation

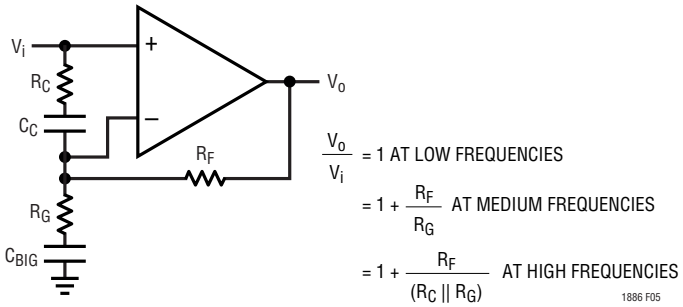

Figure 5. Combination Compensation

Output Loading

The LT1886 output stage is very wide bandwidth and able to source and sink large currents. Reactive loading, even isolated with a back-termination resistor, can cause ringing at frequencies of hundreds of MHz. For this reason, any design should be evaluated over a wide range of output conditions. To reduce the effects of reactive loading, an optional snubber network consisting of a series RC across the load can provide a resistive load at high frequency. Another option is to filter the drive to the load. If a back-termination resistor is used, a capacitor to ground at the load can eliminate ringing.

Line Driving Back-Termination

The standard method of cable or line back-termination is shown in Figure 6. The cable/line is terminated in its characteristic impedance (50Ω, 75Ω, 100Ω, 135Ω, etc.). A back-termination resistor also equal to to the chararacteristic impedance should be used for maximum pulse fidelity of outgoing signals, and to terminate the line for incoming signals in a full-duplex application. There are three main drawbacks to this approach. First, the power dissipated in the load and back-termination resistors is equal so half of the power delivered by the amplifier is wasted in the termination resistor. Second, the signal is halved so the gain of the amplifer must be doubled to have the same overall gain to the load. The increase in gain increases noise and decreases bandwidth (which can also increase distortion). Third, the output swing of the amplifier is doubled which can limit the power it can deliver to the load for a given power supply voltage.

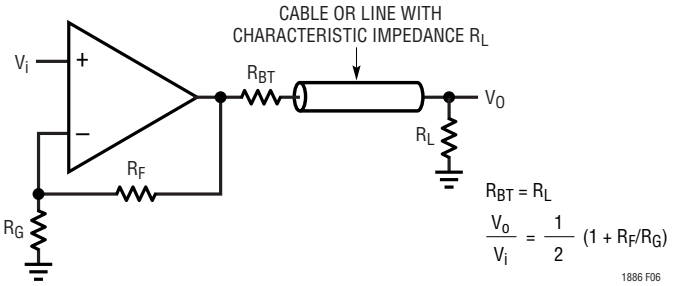

Figure 6. Standard Cable/Line Back-Termination

An alternate method of back-termination is shown in Figure 7. Positive feedback increases the effective back-termination resistance so R_{BT} can be reduced by a factor of n. To analyze this circuit, first ground the input. As $R_{BT} = R_L/n$, and assuming $R_{P2} >> R_L$ we require that:

$V_a = V_o\ (1 - 1/n)$ to increase the effective value of R_{BT} by n.

$V_p = V_o\ (1 - 1/n)/(1 + R_F/R_G)$

$V_o = V_p\ (1 + R_{P2}/R_{P1})$

Eliminating Vp, we get the following:

$(1 + R_{P2}/R_{P1}) = (1 + R_F/R_G)/(1 - 1/n)$

APPLICATIONS INFORMATION

For example, reducing R_{BT} by a factor of n = 4, and with an amplifer gain of $(1 + R_F/R_G) = 10$ requires that $R_{P2}/R_{P1} = 12.3$.

Note that the overall gain is increased:

$$\frac{V_o}{V_i} = \frac{R_{P2}/(R_{P2}+R_{P1})}{\left[(1+1/n)/(1+R_F/R_G)\right]-\left[R_{P1}/(R_{P2}+R_{P1})\right]}$$

A simpler method of using positive feedback to reduce the back-termination is shown in Figure 8. In this case, the drivers are driven differentially and provide complementary outputs. Grounding the inputs, we see there is inverting gain of $-R_F/R_P$ from $-V_o$ to V_a

$$V_a = V_o\ (R_F/R_P)$$

and assuming $R_P >> R_L$, we require

$$V_a = V_o\ (1 - 1/n)$$

solving

$$R_F/R_P = 1 - 1/n$$

So to reduce the back-termination by a factor of 3 choose $R_F/R_P = 2/3$. Note that the overall gain is increased to:

$$V_o/V_i = (1 + R_F/R_G + R_F/R_P)/[2(1 - R_F/R_P)]$$

ADSL Driver Requirements

The LT1886 is an ideal choice for ADSL upstream (CPE) modems. The key advantages are: ±200mA output drive with only 1.7V worst-case total supply voltage headroom, high bandwidth, which helps achieve low distortion, low quiescent supply current of 7mA per amplifier and a space-saving, thermally enhanced SO-8 package.

An ADSL remote terminal driver must deliver an average power of 13dBm (20mW) into a 100Ω line. This corresponds to $1.41V_{RMS}$ into the line. The DMT-ADSL peak-to-average ratio of 5.33 implies voltage peaks of 7.53V into the line. Using a differential drive configuration and transformer coupling with standard back-termination, a transformer ratio of 1:2 is well suited. This is shown on the front page of this data sheet along with the distortion performance vs line voltage at 200kHz, which is beyond ADSL requirements. Note that the distortion is better than –73dBc for all swings up to $16V_{P-P}$ into the line. The gain of this circuit from the differential inputs to the line voltage is 10. Lower gains are easy to implement using the compensation techniques of Figure 5. Table 2 shows the drive requirements for this standard circuit.

The above design is an excellent choice for desktop applications and draws typically 550mW of power. For portable applications, power savings can be achieved by reducing the back-termination resistor using positive feedback as shown in Figure 9. The overall gain of this circuit is also 10, but the power consumption has been reduced to 350mW, a savings of 36% over the previous design. Note that the reduction of the back-termination resistor has allowed use of a 1:1 transformer ratio.

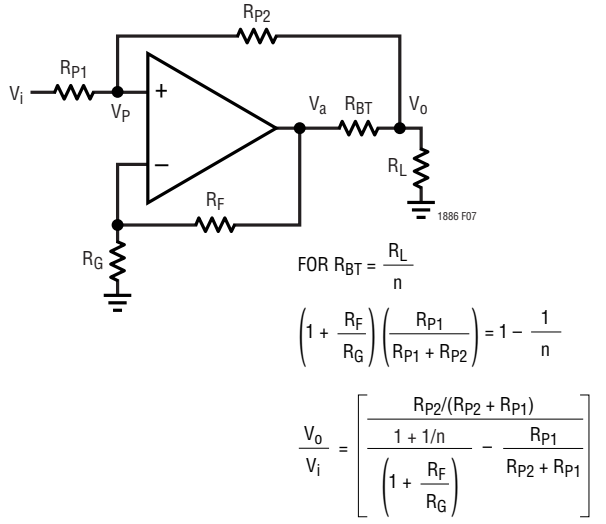

Figure 7. Back-Termination Using Positive Feedback

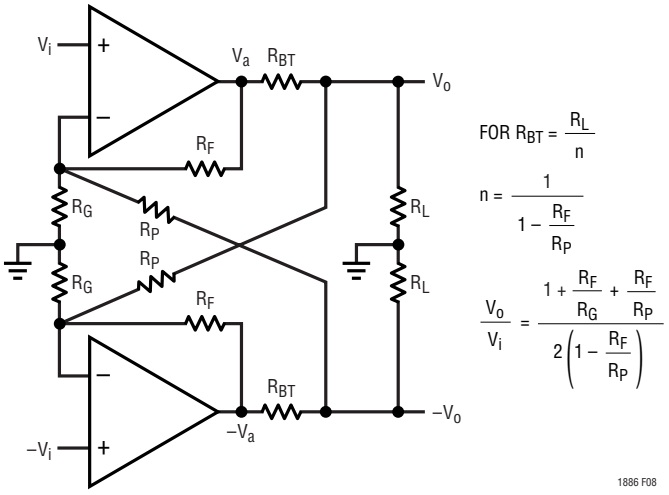

Figure 8. Back-Termination Using Differential Positive Feedback

APPLICATIONS INFORMATION

Table 2. ADSL Upstream Driver Designs

	STANDARD	LOW POWER
Line Impedance	100Ω	100Ω
Line Power	13dBm	13dBm
Peak-to-Average Ratio	5.33	5.33
Transformer Turns Ratio	2	1
Reflected Impedance	25Ω	100Ω
Back-Termination Resistors	12.5Ω	8.35Ω
Transformer Insertion Loss	1dB	0.5dB
Average Amplifier Swing	$0.79V_{RMS}$	$0.87V_{RMS}$
Average Amplifier Current	$31.7mA_{RMS}$	$15mA_{RMS}$
Peak Amplifier Swing	4.21V Peak	4.65V Peak
Peak Amplifier Current	169mA Peak	80mA Peak
Total Average Power Consumption	550mW	350mW
Supply Voltage	Single 12V	Single 12V

Table 2 compares the two approaches. It may seem that the low power design is a clear choice, but there are further system issues to consider. In addition to driving the line, the amplifiers provide back-termination for signals that are received simultaneously from the line. In order to reject the drive signal, a receiver circuit is used such as shown in Figure 10. Taking advantage of the differential nature of the signals, the receiver can subtract out the drive signal and amplify the received signal. This method works well for standard back-termination. If the back-termination resistors are reduced by positive feedback, a portion of the received signal also appears at the amplifier outputs. The result is that the received signal is attenuated by the same amount as the reduction in the back-termination resistor. Taking into account the different transformer turns ratios, the received signal of the low power design will be one third of the standard design received signal. The reduced signal has system implications for the sensitivity of the receiver. The power reduction may, or may not, be an acceptable system tradeoff for a given design.

Demo Board

Demo board DC304 has been created to provide a versatile platform for a line driver/receiver design. (Figure 11 shows a complete schematic.) The board is set up for either single or dual supply designs with Jumpers 1–4. The LT1886 is set up for differential, noninverting gain of 3. Each amp is configured as in Figure 5 for maximum flexibility. The amplifiers drive a 1:2 transformer through back-termination resistors that can be reduced with optional positive feedback. The secondary of the transformer can be isolated from the primary with Jumper 5.

A differential receiver is included using the LT1813, a dual 100MHz, 750V/μs operational amplifier. The receiver gain from the transformer secondary is 2, and the drive signals are rejected by approximately a factor of 14dB. Other optional components include filter capacitors and an RC snubber network at the transformer primary.

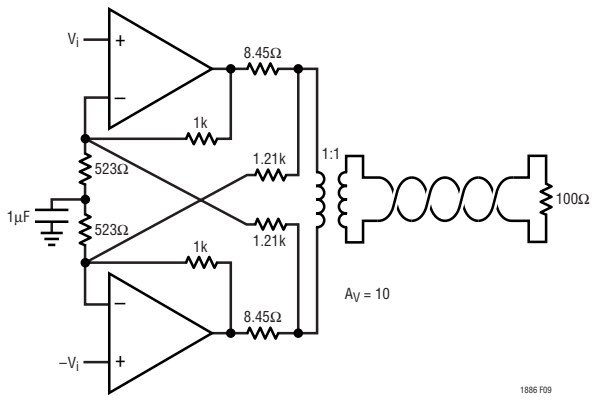

Figure 9. Power Saving ADSL Modem Driver

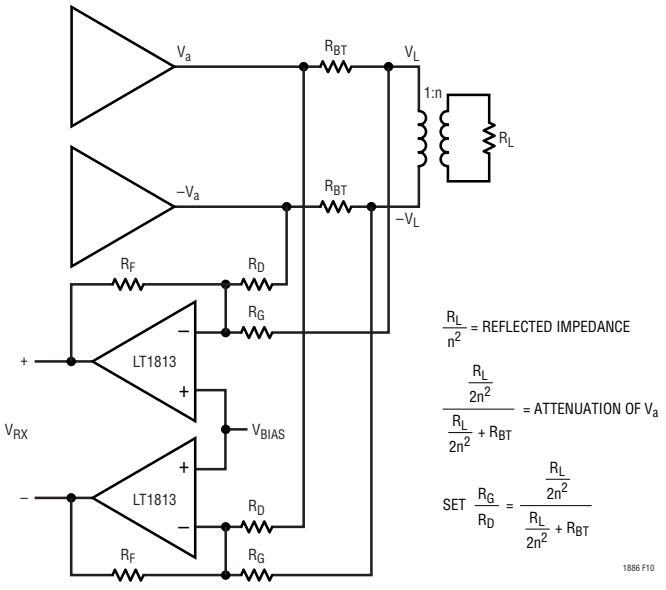

Figure 10. Receiver Configuration

APPLICATIONS INFORMATION

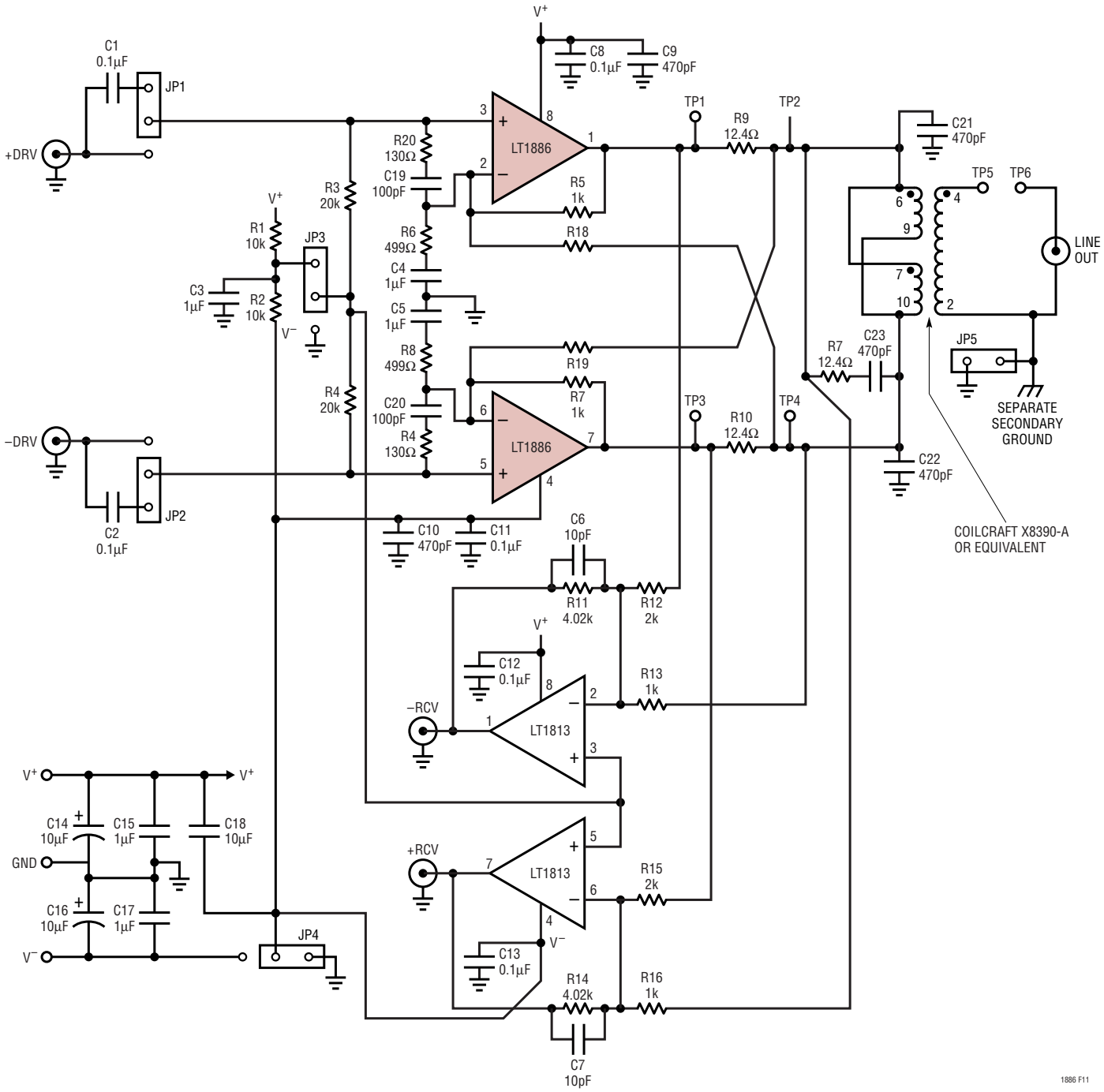

Figure 11. LT1886, LT1813 DSL Demo Board (DC304)

SIMPLIFIED SCHEMATIC

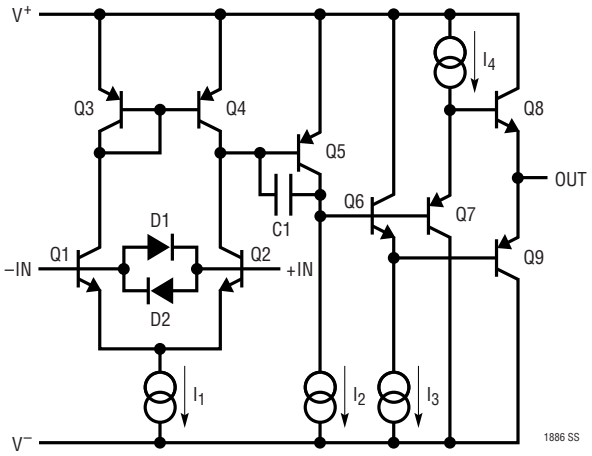

PACKAGE DESCRIPTION

Dimensions in inches (millimeters) unless otherwise noted.

S8 Package
8-Lead Plastic Small Outline (Narrow 0.150)
(LTC DWG # 05-08-1610)

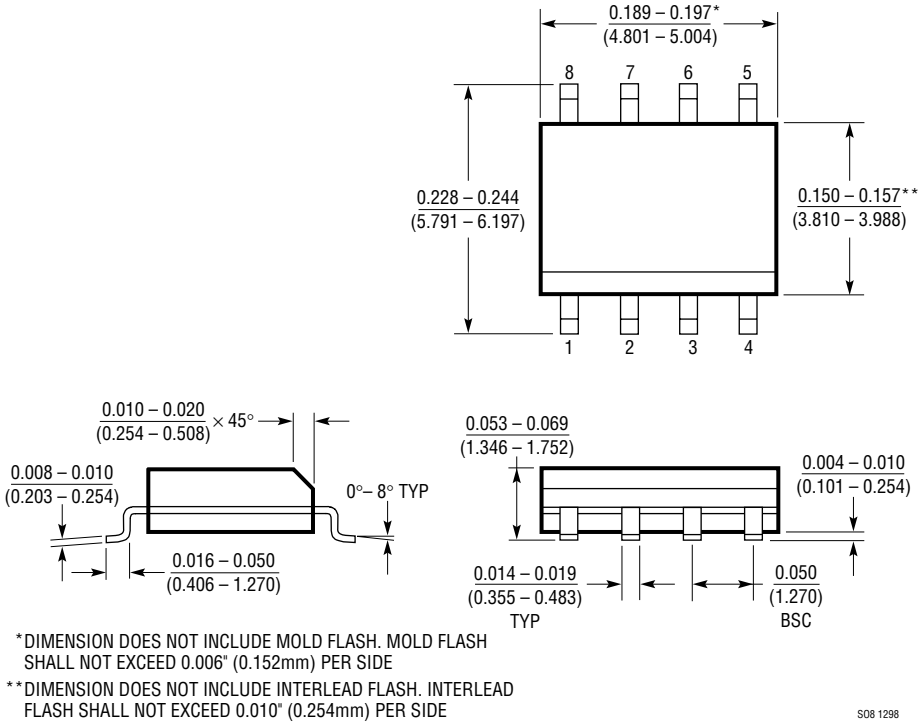

*DIMENSION DOES NOT INCLUDE MOLD FLASH. MOLD FLASH SHALL NOT EXCEED 0.006" (0.152mm) PER SIDE

**DIMENSION DOES NOT INCLUDE INTERLEAD FLASH. INTERLEAD FLASH SHALL NOT EXCEED 0.010" (0.254mm) PER SIDE

S08 1298

Information furnished by Linear Technology Corporation is believed to be accurate and reliable. However, no responsibility is assumed for its use. Linear Technology Corporation makes no representation that the interconnection of its circuits as described herein will not infringe on existing patent rights.

TYPICAL APPLICATION

Considerations for Fault Protection

The basic line driver design presents a direct DC path between the outputs of the two amplifiers. An imbalance in the DC biasing potentials at the noninverting inputs through either a fault condition or during turn-on of the system can create a DC voltage differential between the two amplifier outputs. This condition can force a considerable amount of current, 500mA or more, to flow as it is limited only by the small valued back-termination resistors and the DC resistance of the transformer primary. This high current can possibly cause the power supply voltage source to drop significantly impacting overall system performance. If left unchecked, the high DC current can heat the LT1886 to destruction.

Using DC blocking capacitors to AC couple the signal to the transformer eliminates the possibility for DC current to flow under any conditions. These capacitors should be sized large enough to not impair the frequency response characteristics required for the data transmission.

Another important fault related concern has to do with very fast high voltage transients appearing on the telephone line (lightning strikes for example). TransZorbs™, varistors and other transient protection devices are often used to absorb the transient energy, but in doing so also create fast voltage transitions themselves that can be coupled through the transformer to the outputs of the line driver. Several hundred volt transient signals can appear at the primary windings of the transformer with current into the driver outputs limited only by the back termination resistors. While the LT1886 has clamps to the supply rails at the output pins, they may not be large enough to handle the significant transient energy. External clamping diodes, such as BAV99s, at each end of the transformer primary help to shunt this destructive transient energy away from the amplifier outputs.

TransZorb is a registered trademark of General Instruments, GSI

Split Supply ±5V ADSL CPE Line Driver

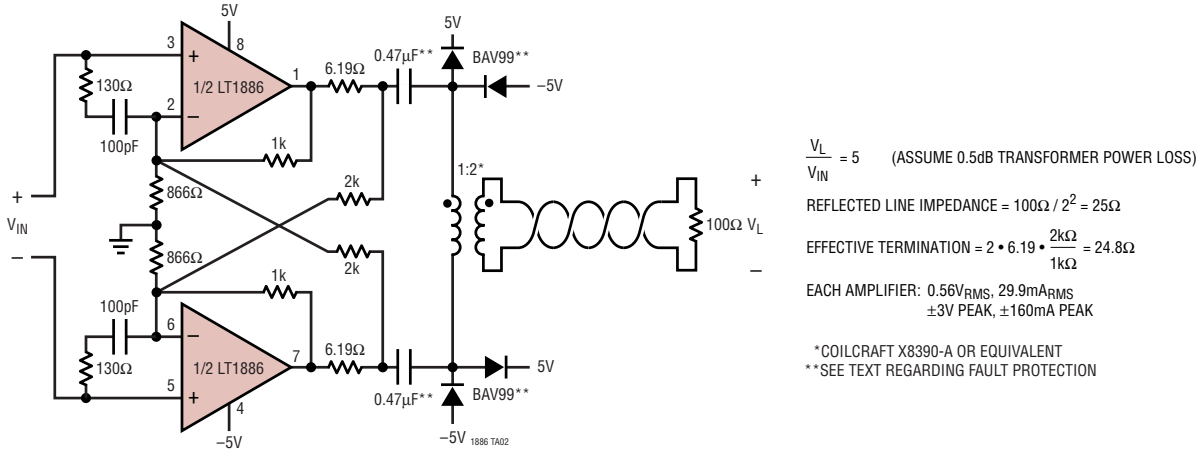

$\frac{V_L}{V_{IN}} = 5$ (ASSUME 0.5dB TRANSFORMER POWER LOSS)

REFLECTED LINE IMPEDANCE = $100\Omega / 2^2 = 25\Omega$

EFFECTIVE TERMINATION = $2 \bullet 6.19 \bullet \frac{2k\Omega}{1k\Omega} = 24.8\Omega$

EACH AMPLIFIER: $0.56V_{RMS}$, $29.9mA_{RMS}$
±3V PEAK, ±160mA PEAK

*COILCRAFT X8390-A OR EQUIVALENT
**SEE TEXT REGARDING FAULT PROTECTION

RELATED PARTS

PART NUMBER	DESCRIPTION	COMMENTS
LT1207	Dual 250mA, 60MHz Current Feedback Amplifier	Shutdown/Current Set Function
LT1361	Dual 50MHz, 800V/µs Op Amp	±15V Operation, 1mV V_{OS}, 1µA I_B
LT1396	Dual 400MHz, 800V/µs Current Feedback Amplifier	4.6mA Supply Current Set, 80mA I_{OUT}
LT1497	Dual 125mA, 50MHz Current Feedback Amplifier	900V/µs Slew Rate
LT1795	Dual 500mA, 50MHz Current Feedback Amplifier	Shutdown/Current Set Function, ADSL CO Driver
LT1813	Dual 100MHz, 750V/µs, 8nV/√Hz Op Amp	Low Noise, Low Power Differential Receiver

Linear Technology Corporation
1630 McCarthy Blvd., Milpitas, CA 95035-7417
(408)432-1900 • FAX: (408) 434-0507 • www.linear-tech.com
1886fa LT/LCG 0301 2K REV A • PRINTED IN USA
© LINEAR TECHNOLOGY CORPORATION 1999