Hot Swap Controller with Multifunction Current Control

FEATURES

- **Allows Safe Board Insertion and Removal from a Live Backplane**
- **Controls Supply Voltages from 2.5V to 16.5V**
- **Programmable Soft-Start with Inrush Current Limiting, No External Gate Capacitor Required**
- **Faster Turn-Off Time Because No External Gate Capacitor is Required**
- **Dual Level Overcurrent Fault Protection**
- **Programmable Response Time for Overcurrent Protection (MS)**
- **Programmable Overvoltage Protection (MS)**
- **Automatic Retry or Latched Mode Operation (MS)**
- High Side Drive for an External N-Channel FET
- User-Programmable Supply Voltage Power-Up Rate
- FB Pin Monitors V_{OUT} and Signals $\overline{RESET}$
- Glitch Filter Protects Against Spurious $\overline{RESET}$ Signal

APPLICATIONS

- Electronic Circuit Breaker
- Hot Board Insertion and Removal (Either On Backplane or On Removable Card)
- Industrial High Side Switch/Circuit Breaker

DESCRIPTION

The LTC®4211 is a Hot Swap™ controller that allows a board to be safely inserted and removed from a live backplane. An internal high side switch driver controls the gate of an external N-channel MOSFET for supply voltages ranging from 2.5V to 16.5V. The LTC4211 provides soft-start and inrush current limiting during the start-up period which has a programmable duration.

Two on-chip current limit comparators provide dual level overcurrent circuit breaker protection. The slow comparator trips at V_{CC} – 50mV and activates in 20µs (or is programmed by an external filter capacitor, MS only). The fast comparator trips at V_{CC} – 150mV and typically responds in 300ns.

The FB pin monitors the output supply voltage and signals the $\overline{RESET}$ output pin. The ON pin signal turns the chip on and off and can also be used for the reset function. The MS package has $\overline{FAULT}$ and FILTER pins to provide additional functions like fault indication, autoretry or latch-off modes, programmable current limit response time and programmable overvoltage protection using an external Zener diode clamp.

LT, LTC, LTM, Linear Technology and the Linear logo are registered trademarks and Hot Swap is a trademark of Linear Technology Corporation. All other trademarks are the property of their respective owners.

TYPICAL APPLICATION

Single Channel 5V Hot Swap Controller

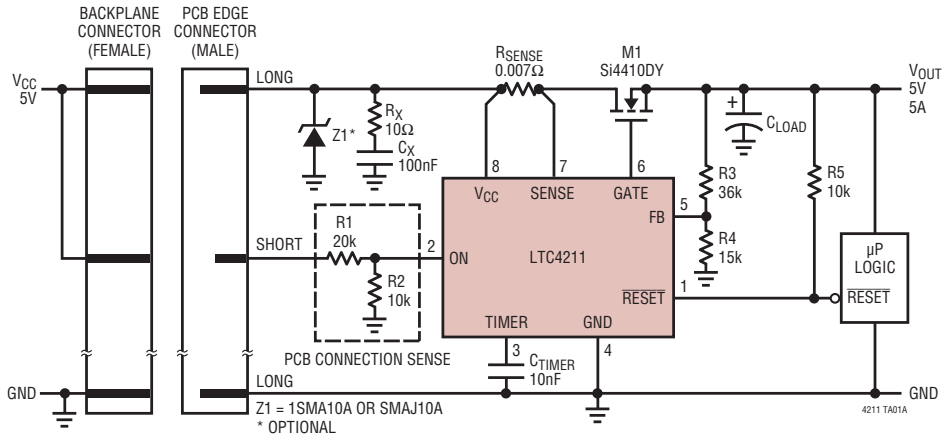

Power-Up Sequence

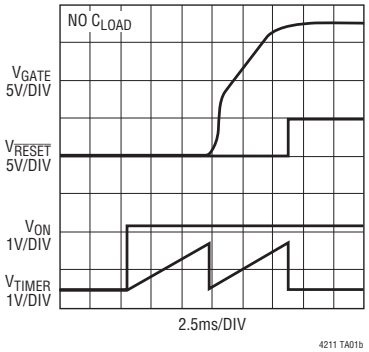

ABSOLUTE MAXIMUM RATINGS

(Note 1)

Supply Voltage (V_{CC}) 17V
Input Voltage
FB, ON ..... –0.3V to 17V
SENSE, FILTER ..... –0.3V to V_{CC} + 0.3V
TIMER ..... –0.3V to 2V
Output Voltage
GATE ..... Internally Limited (Note 3)
$\overline{RESET}$, $\overline{FAULT}$ ..... –0.3V to 17V

Operating Temperature Range
LTC4211C ..... 0°C to 70°C
LTC4211I ..... –40°C to 85°C
Storage Temperature Range ..... –65°C to 150°C
Lead Temperature (Soldering, 10 sec) ..... 300°C

PIN CONFIGURATION

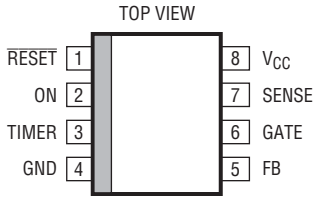

S8 PACKAGE
8-LEAD PLASTIC SO

T_{JMAX} = 125°C, θ_{JA} = 150°C/W

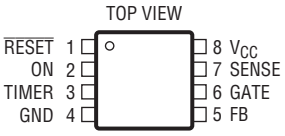

MS8 PACKAGE
8-LEAD PLASTIC MSOP

T_{JMAX} = 125°C, θ_{JA} = 200°C/W

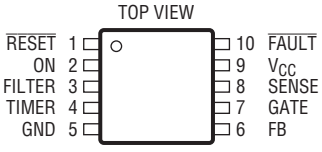

MS PACKAGE
10-LEAD PLASTIC MSOP

T_{JMAX} = 125°C, θ_{JA} = 200°C/W

ORDER INFORMATION

LEAD FREE FINISH	TAPE AND REEL	PART MARKING	PACKAGE DESCRIPTION	TEMPERATURE RANGE
LTC4211CS8#PBF	LTC4211CS8#TRPBF	4211	8-Lead Plastic SO	0°C to 70°C
LTC4211IS8#PBF	LTC4211IS8#TRPBF	4211I	8-Lead Plastic SO	–40°C to 85°C
LTC4211CMS8#PBF	LTC4211CMS8#TRPBF	LTSC	8-Lead Plastic MSOP	0°C to 70°C
LTC4211IMS8#PBF	LTC4211IMS8#TRPBF	LTSD	8-Lead Plastic MSOP	–40°C to 85°C
LTC4211CMS#PBF	LTC4211CMS#TRPBF	LTSU	10-Lead Plastic MSOP	0°C to 70°C
LTC4211IMS#PBF	LTC4211IMS#TRPBF	LTSV	10-Lead Plastic MSOP	–40°C to 85°C

Consult LTC Marketing for parts specified with wider operating temperature ranges.

For more information on lead free part marking, go to: http://www.linear.com/leadfree/
For more information on tape and reel specifications, go to: http://www.linear.com/tapeandreel/

ELECTRICAL CHARACTERISTICS

The ● denotes the specifications which apply over the full operating temperature range, otherwise specifications are at T_A = 25°C. V_{CC} = 5V, unless otherwise noted. (Note 2)

SYMBOL	PARAMETER	CONDITIONS		MIN	TYP	MAX	UNITS
V_{CC}	V_{CC} Supply Voltage Range		●	2.5		16.5	V
I_{CC}	V_{CC} Supply Current	FB = High, ON = High, TIMER = Low	●		1	1.5	mA
V_{LKO}	Internal V_{CC} Undervoltage Lockout	V_{CC} Low-to-High Transition	●	2.13	2.3	2.47	V
V_{LKOHST}	V_{CC} Undervoltage Lockout Hysteresis				120		mV
I_{INFB}	FB Input Current	V_{FB} = V_{CC} or GND			±1	±10	µA

ELECTRICAL CHARACTERISTICS

The ● denotes the specifications which apply over the full operating temperature range, otherwise specifications are at T_A = 25°C. V_{CC} = 5V, unless otherwise noted. (Note 2)

SYMBOL	PARAMETER	CONDITIONS		MIN	TYP	MAX	UNITS
I_{INON}	ON Input Current	$V_{ON} = V_{CC}$ or GND			±1	±10	µA
I_{LEAK}	$\overline{RESET}$, $\overline{FAULT}$ Leakage Current	$V_{\overline{RESET}} = V_{\overline{FAULT}}$ = 15V, Pull-Down Device Off	●		±0.1	±2.5	µA
$I_{INSENSE}$	SENSE Input Current	$V_{SENSE} = V_{CC}$ or GND			±1	±10	µA
$V_{CB(FAST)}$	SENSE Trip Voltage ($V_{CC} - V_{SENSE}$)	Fast Comparator Trips	●	130	150	170	mV
$V_{CB(SLOW)}$	SENSE Trip Voltage ($V_{CC} - V_{SENSE}$)	Slow Comparator Trips	●	40	50	60	mV
I_{GATEUP}	GATE Pull-Up Current	Charge Pump On, $V_{GATE} \leq 0.2V$	●	–12.5	–10	–7.5	µA
$I_{GATEDOWN}$	Normal GATE Pull-Down Current	ON Low	●	130	200	270	µA
	Fast GATE Pull-Down Current	$\overline{FAULT}$ Latched and Circuit Breaker Tripped or in UVLO			50		mA
ΔV_{GATE}	External N-Channel Gate Drive	$V_{GATE} - V_{CC}$ (For V_{CC} = 2.5V) $V_{GATE} - V_{CC}$ (For V_{CC} = 2.7V) $V_{GATE} - V_{CC}$ (For V_{CC} = 3.3V) $V_{GATE} - V_{CC}$ (For V_{CC} = 5V) $V_{GATE} - V_{CC}$ (For V_{CC} = 12V) $V_{GATE} - V_{CC}$ (For V_{CC} = 15V)	● ● ● ● ● ●	2.5 4.5 5.0 10 10 8	 	8 8 10 16 18 18	V V V V V V
V_{GATEOV}	GATE Overvoltage Lockout Threshold		●	0.08	0.2	0.3	V
V_{FB}	FB Voltage Threshold	FB High to Low	●	1.223	1.236	1.248	V
ΔV_{FB}	FB Threshold Line Regulation	$2.5V \leq V_{CC} \leq 16.5V$	●		0.5	5	mV
V_{FBHST}	FB Voltage Threshold Hysteresis				3		mV
V_{ONHI}	ON Threshold High		●	1.23	1.316	1.39	V
V_{ONLO}	ON Threshold Low		●	1.20	1.236	1.26	V
V_{ONHST}	ON Hysteresis				80		mV
I_{FILTER}	FILTER Current	During Slow Fault Condition	●	–2.5	–2	–1.5	µA
		During Normal and Reset Conditions	●	7	10	13	µA
V_{FILTER}	FILTER Threshold	Latched Off Threshold, FILTER Low to High	●	1.20	1.236	1.26	V
$V_{FILTERHST}$	FILTER Threshold Hysteresis				80		mV
I_{TMR}	TIMER Current	Timer On, V_{TIMER} = 1V	●	–2.5	–2	–1.5	µA
		Timer Off, TIMER = 1.5V			3		mA
V_{TMR}	TIMER Threshold	TIMER Low to High	●	1.20	1.236	1.26	V
		TIMER High to Low	●	0.15	0.200	0.40	V
$V_{\overline{FAULT}}$	$\overline{FAULT}$ Threshold	Latched Off Threshold, $\overline{FAULT}$ High to Low	●	1.20	1.236	1.26	V
$V_{\overline{FAULT}HST}$	$\overline{FAULT}$ Threshold Hysteresis				50		mV
$V_{OL\overline{FAULT}}$	Output Low Voltage	$I_{\overline{FAULT}}$ = 1.6mA	●		0.14	0.4	V
$V_{OL\overline{RESET}}$	Output Low Voltage	$I_{\overline{RESET}}$ = 1.6mA	●		0.14	0.4	V
$t_{\overline{FAULT}FC}$	FAST COMP Trip to GATE Discharging	V_{CB} = 0mV to 200mV Step	●		300	700	ns
$t_{\overline{FAULT}SC}$	SLOW COMP Trip to GATE Discharging	V_{CB} = 0mV to 100mV Step, 8-Pin Version or FILTER Floating	●	10	20	30	µs
		V_{CB} = 0mV to 100mV Step, 10nF at FILTER Pin to GND	●	4	6	8	ms
$t_{EXT\overline{FAULT}}$	$\overline{FAULT}$ Low to GATE Discharging	$V_{\overline{FAULT}}$ = 5V to 0V	●	1	3	5	µs
t_{FILTER}	FILTER High to $\overline{FAULT}$ Latched	V_{FILTER} = 0V to 5V	●	2	4.5	7	µs

ELECTRICAL CHARACTERISTICS

The ● denotes the specifications which apply over the full operating temperature range, otherwise specifications are at T_A = 25°C. V_{CC} = 5V, unless otherwise noted. (Note 2)

SYMBOL	PARAMETER	CONDITIONS		MIN	TYP	MAX	UNITS
t_{RESET}	Circuit Breaker Reset Delay Time	ON Low to $\overline{FAULT}$ High	●		150	250	µs
t_{OFF}	Turn-Off Time	ON Low to GATE Off			8		µs

Note 1: Stresses beyond those listed under Absolute Maximum Ratings may cause permanent damage to the device. Exposure to any Absolute Maximum Rating condition for extended periods may affect device reliability and lifetime.

Note 2: All current into device pins are positive; all current out of device pins are negative; all voltages are referenced to ground unless otherwise specified.

Note 3: An internal Zener at the GATE pin clamps the charge pump voltage to a typical maximum operating voltage of 26V. External voltage applied to the GATE pin beyond the internal Zener voltage may damage the part. If a lower GATE pin voltage is desired, use an external Zener diode. The GATE capacitance must be <0.15µF at maximum V_{CC}.

TYPICAL PERFORMANCE CHARACTERISTICS

Supply Current vs Supply Voltage

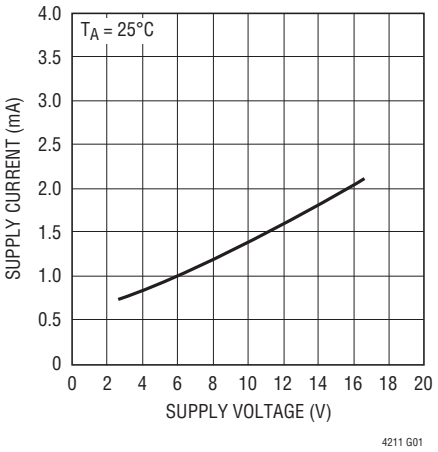

Supply Current vs Temperature

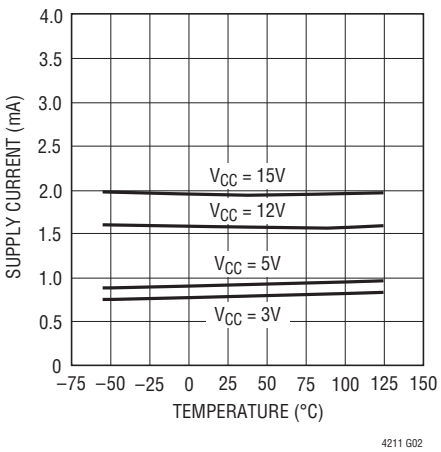

Undervoltage Lockout Threshold vs Temperature

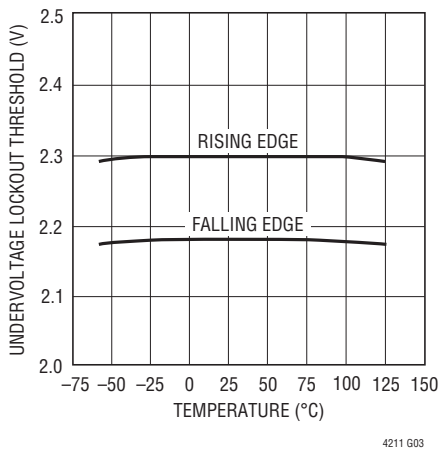

ON Pin Threshold vs Supply Voltage

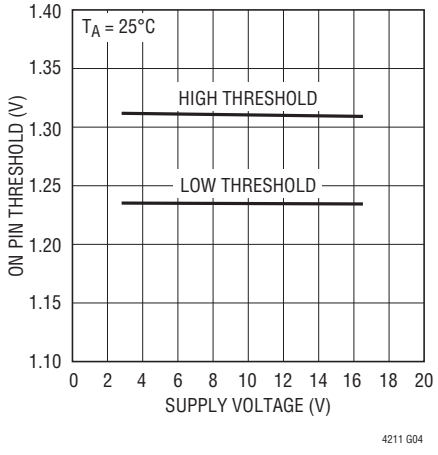

ON Pin Threshold vs Temperature

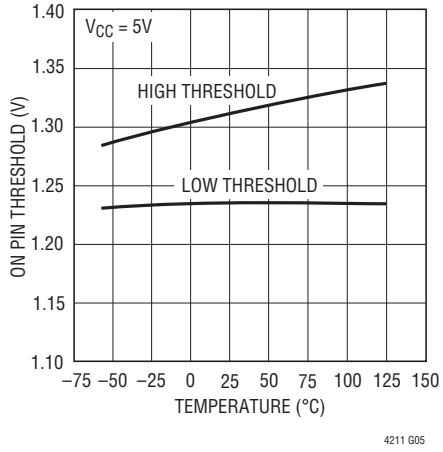

GATE Voltage vs Supply Voltage

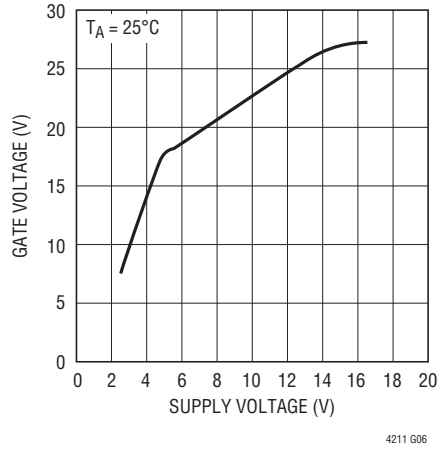

TYPICAL PERFORMANCE CHARACTERISTICS

GATE Voltage vs Temperature

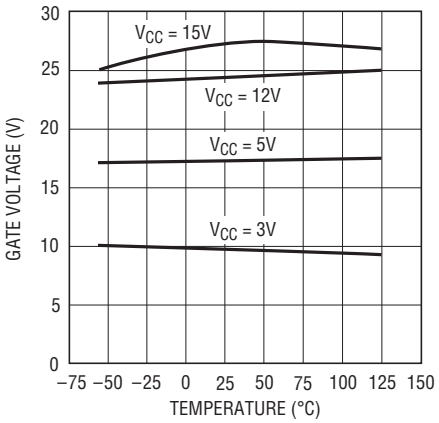

$V_{GATE} - V_{CC}$ vs Supply Voltage

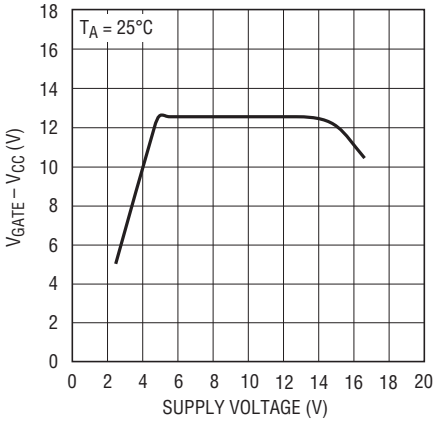

$V_{GATE} - V_{CC}$ vs Temperature

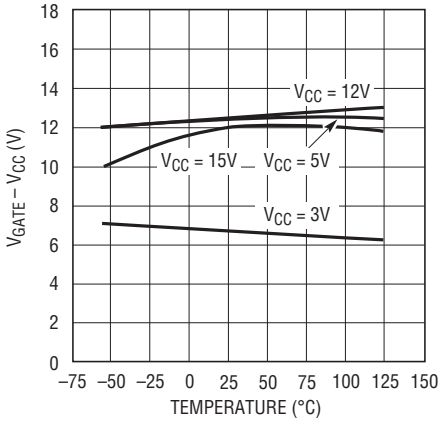

GATE Output Source Current vs Supply Voltage

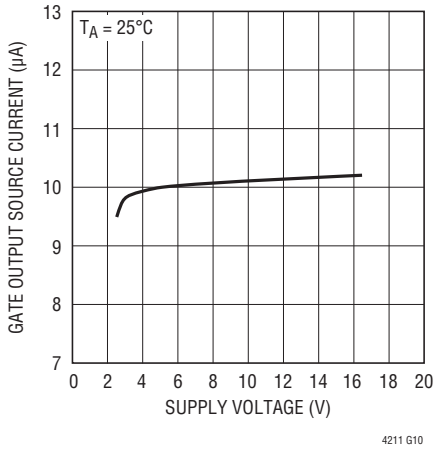

GATE Output Source Current vs Temperature

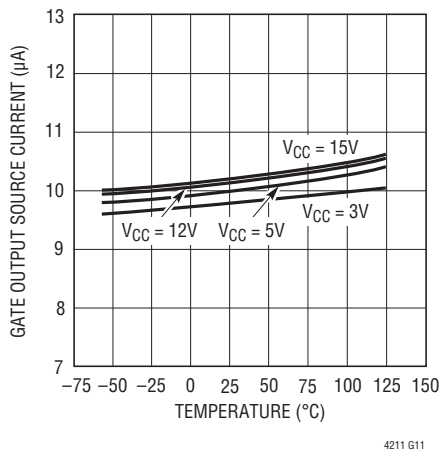

Normal GATE Pull-Down Current vs Supply Voltage

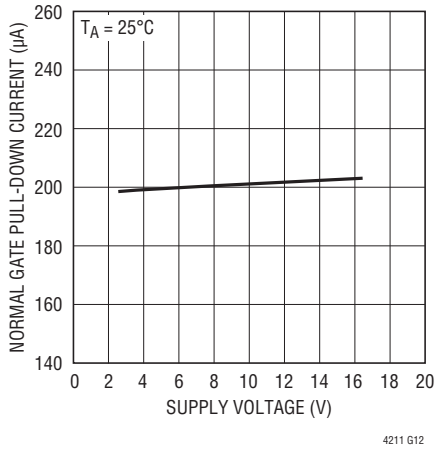

Normal GATE Pull-Down Current vs Temperature

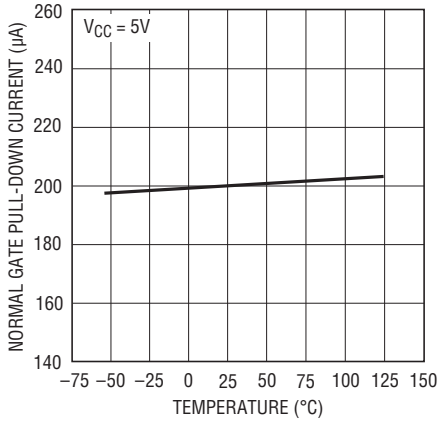

Fast GATE Pull-Down Current vs Supply Voltage

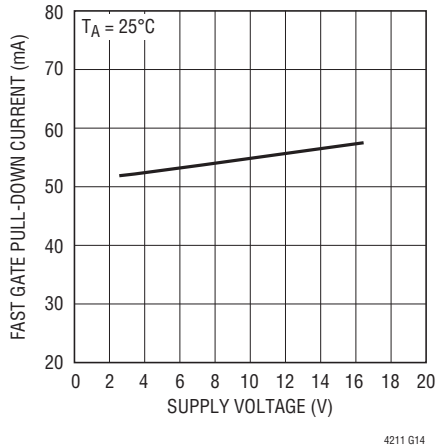

Fast GATE Pull-Down Current vs Temperature

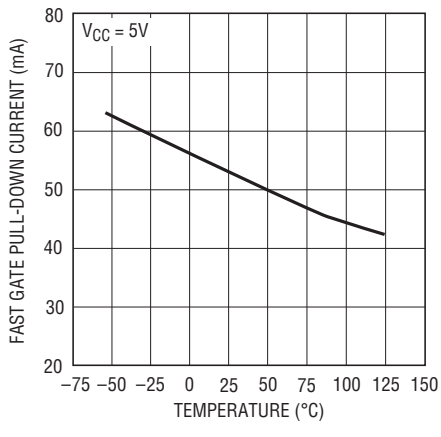

TYPICAL PERFORMANCE CHARACTERISTICS

Feedback Threshold vs Supply Voltage

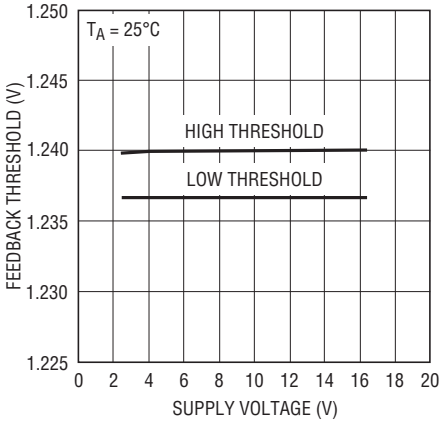

4211 G16

Feedback Threshold vs Temperature

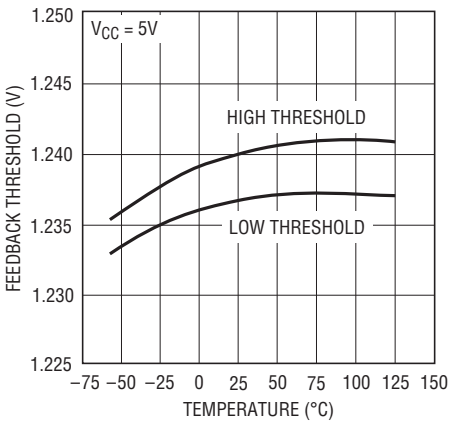

4211 G17

FILTER Threshold vs Supply Voltage

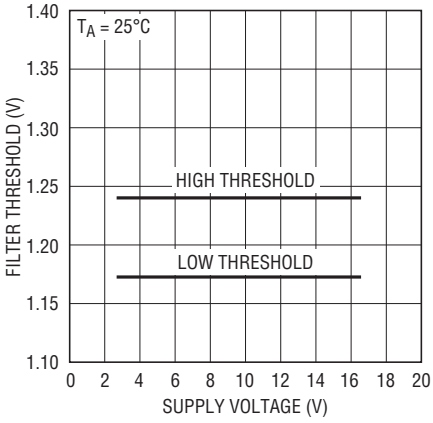

4211 G18

FILTER Threshold vs Temperature

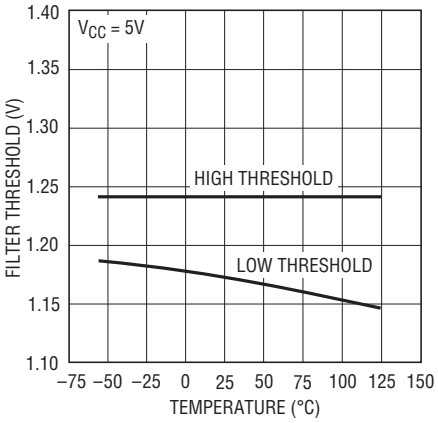

4211 G19

FILTER Pull-Up Current vs Supply Voltage

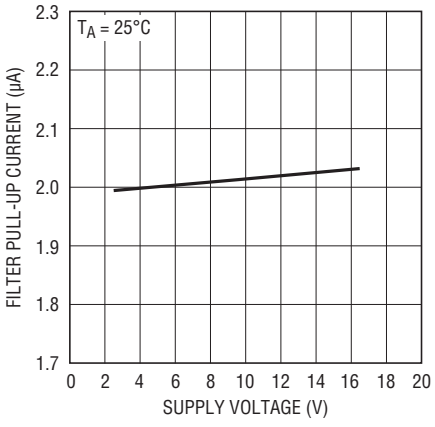

4211 G20

FILTER Pull-Up Current vs Temperature

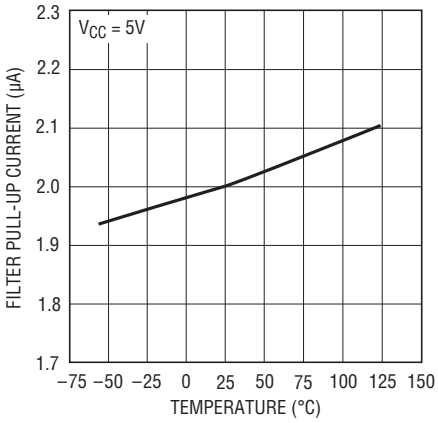

4211 G21

FILTER Pull-Down Current vs Supply Voltage

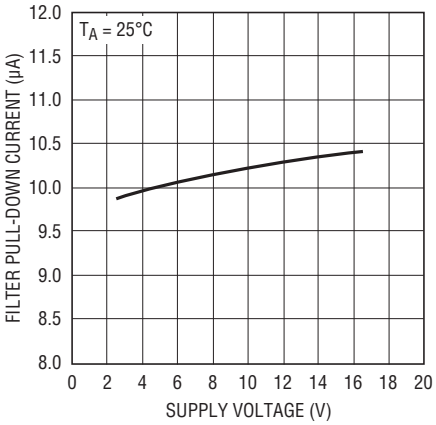

4211 G22

FILTER Pull-Down Current vs Temperature

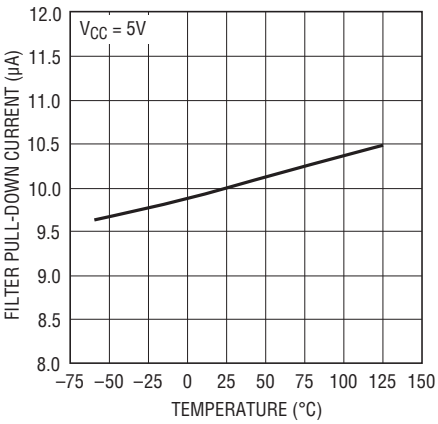

4211 G23

TIMER High Threshold vs Supply Voltage

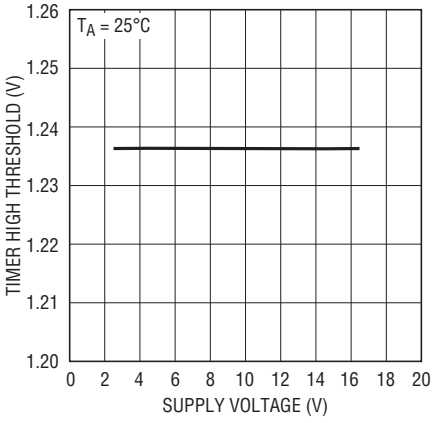

4211 G24

TYPICAL PERFORMANCE CHARACTERISTICS

TIMER High Threshold vs Temperature

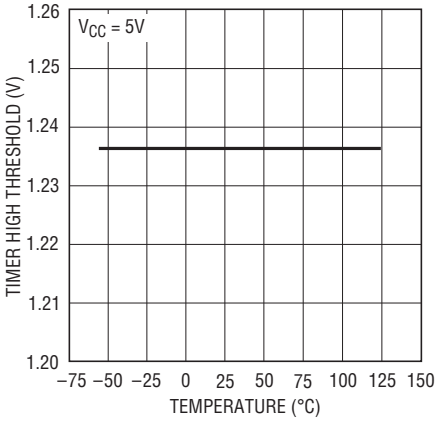

4211 G25

TIMER Low Threshold vs Supply Voltage

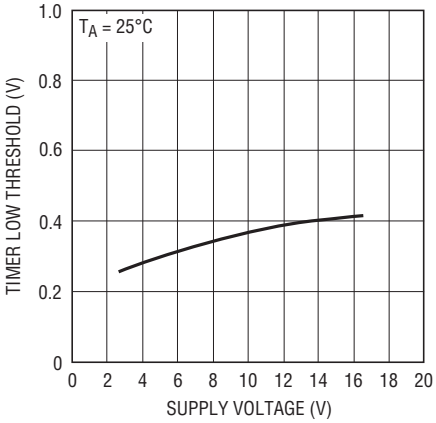

4211 G26

TIMER Low Threshold vs Temperature

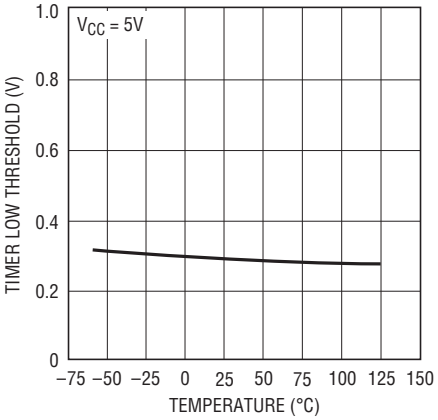

4211 G27

TIMER Pull-Up Current vs Supply Voltage

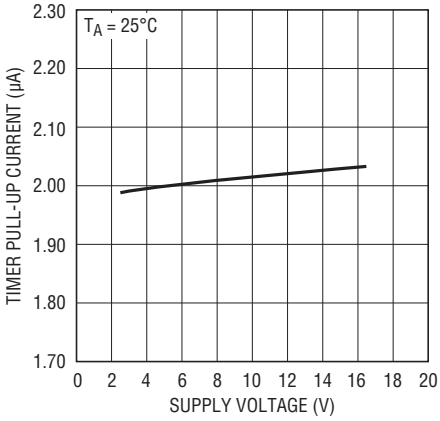

4211 G28

TIMER Pull-Up Current vs Temperature

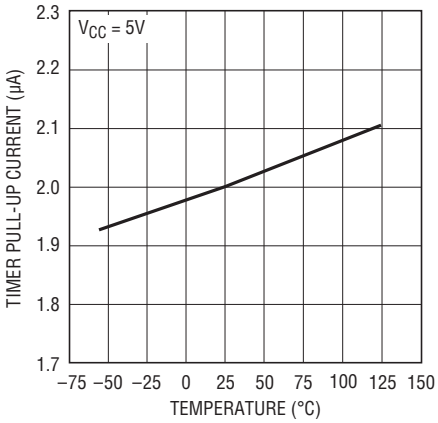

4211 G29

TIMER Pull-Down Current vs Supply Voltage

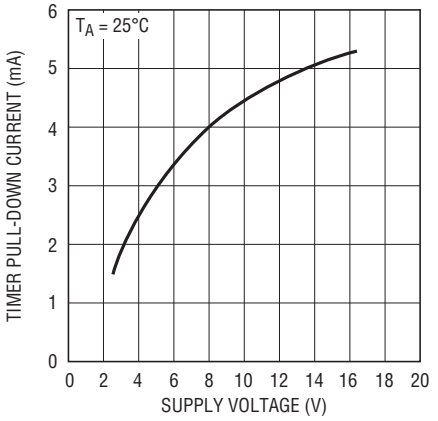

4211 G30

TIMER Pull-Down Current vs Temperature

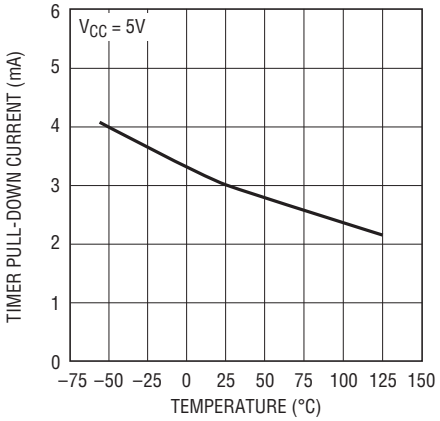

4211 G31

V_{OL} vs Supply Voltage

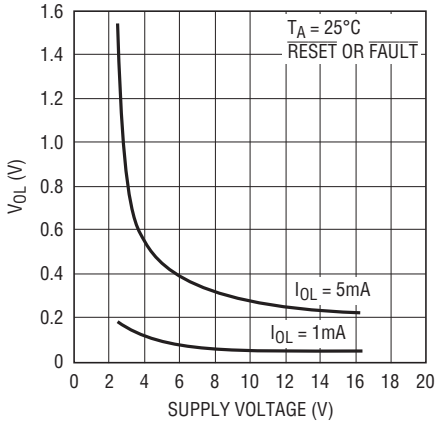

4211 G32

V_{OL} vs Temperature

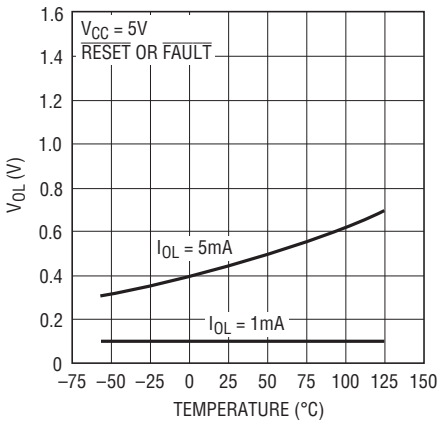

4211 G33

TYPICAL PERFORMANCE CHARACTERISTICS

V_{CB} (SLOW COMP) vs Supply Voltage

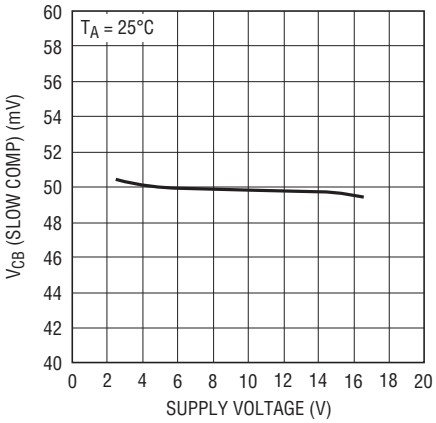

V_{CB} (SLOW COMP) vs Temperature

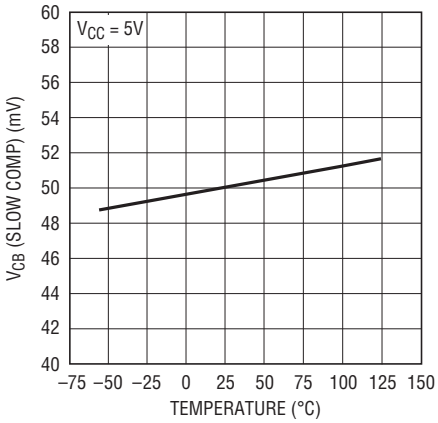

V_{CB} (FAST COMP) vs Supply Voltage

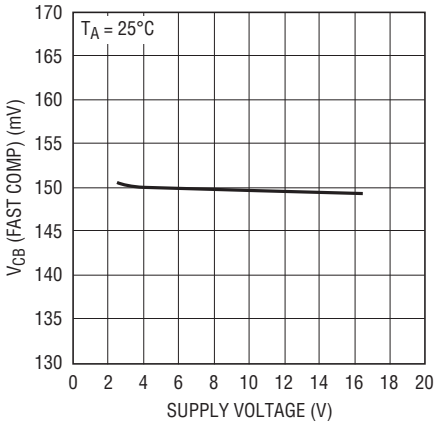

V_{CB} (FAST COMP) vs Temperature

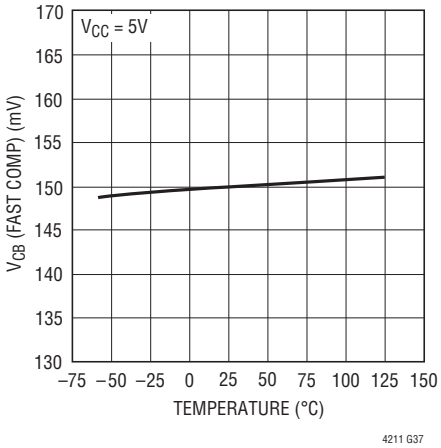

SLOW COMP Response Time vs Supply Voltage

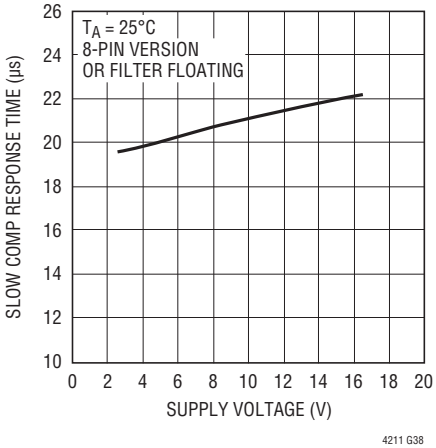

SLOW COMP Response Time vs Temperature

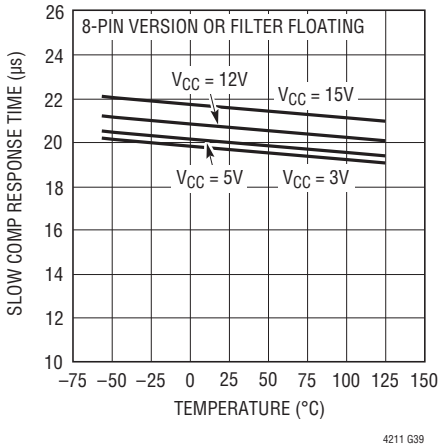

FAST COMP Response Time vs Supply Voltage

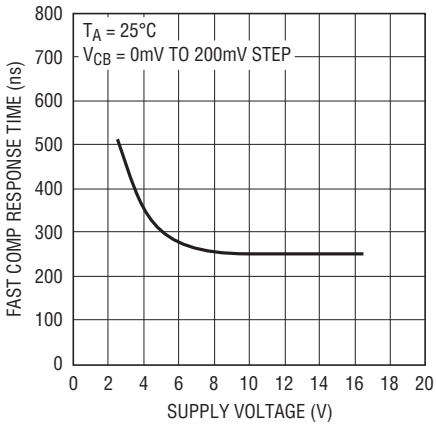

FAST COMP Response Time vs Temperature

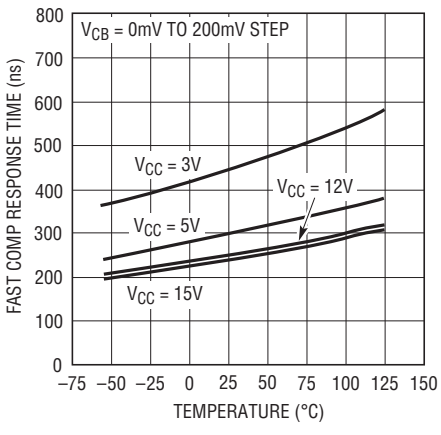

FILTER High to $\overline{\text{FAULT}}$ Activation Time vs Supply Voltage

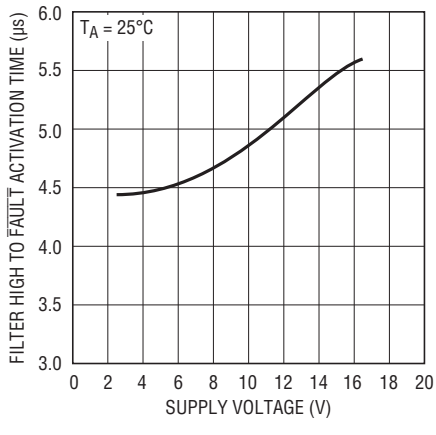

TYPICAL PERFORMANCE CHARACTERISTICS

FILTER High to $\overline{FAULT}$ Activation Time vs Temperature

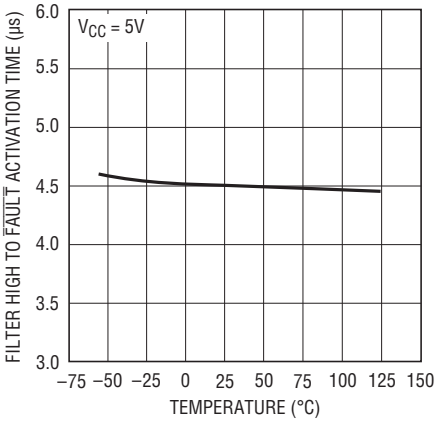

4211 G43

Circuit Breaker RESET Time vs Supply Voltage

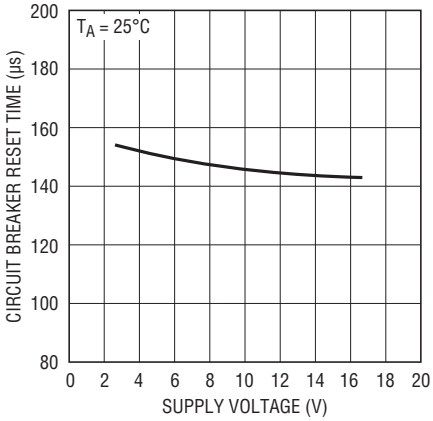

4211 G44

Circuit Breaker RESET Time vs Temperature

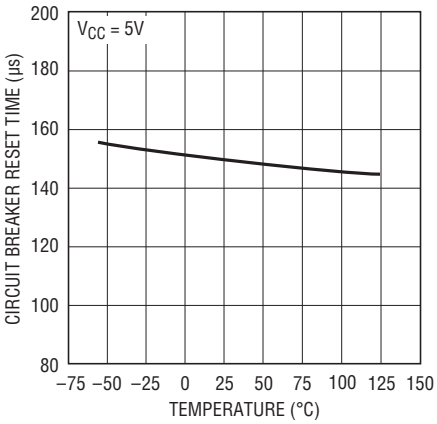

4211 G45

$\overline{FAULT}$ Pin Low to GATE Discharging Time vs Supply Voltage

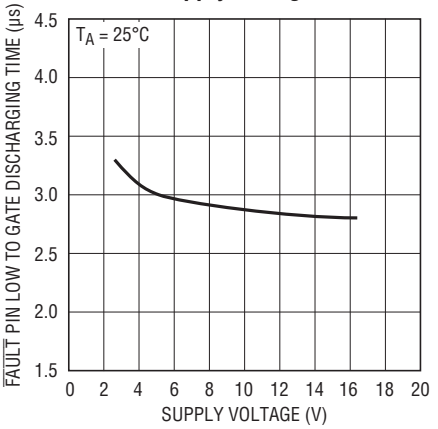

4211 G46

$\overline{FAULT}$ Pin Low to GATE Discharging Time vs Temperature

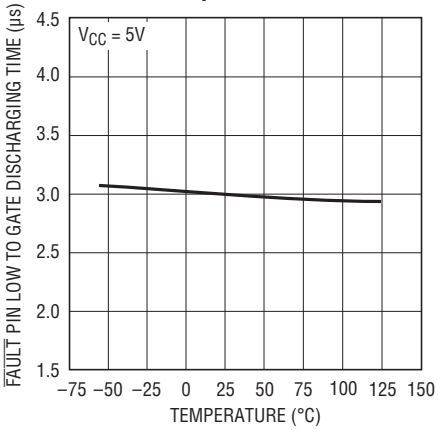

4211 G47

$\overline{FAULT}$ Threshold Voltage vs Supply Voltage

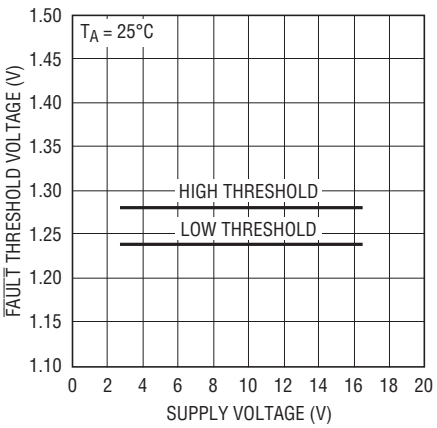

4211 G48

$\overline{FAULT}$ Threshold Voltage vs Temperature

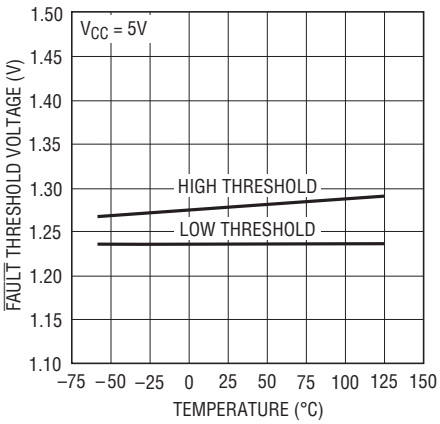

4211 G49

Turn Off Time vs Supply Voltage

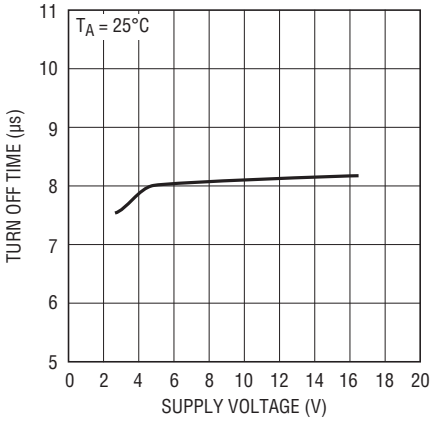

4211 G50

Turn Off Time vs Temperature

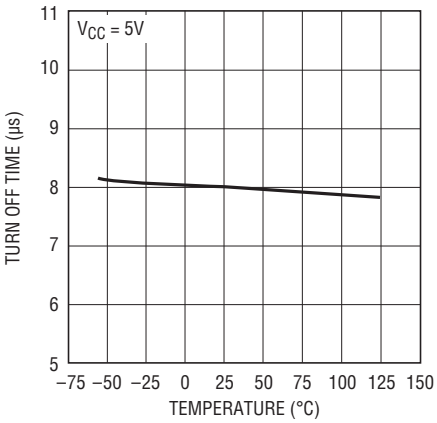

4211 G51

TYPICAL PERFORMANCE CHARACTERISTICS

GATE Overvoltage Lockout Threshold vs Supply Voltage

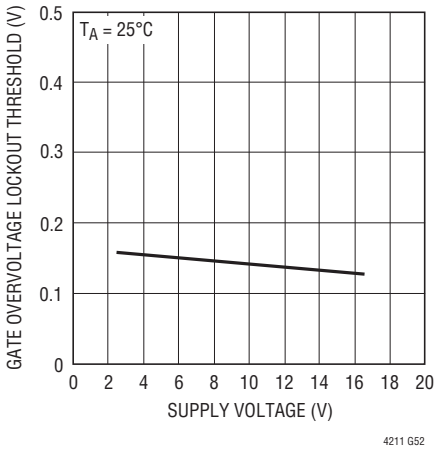

GATE Overvoltage Lockout Threshold vs Temperature

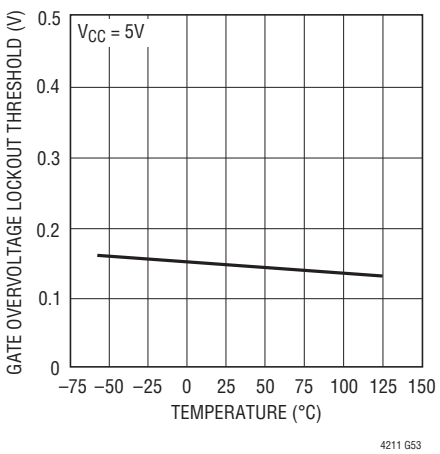

PIN FUNCTIONS (8-Lead Package/10-Lead Package)

$\overline{\text{RESET}}$ (Pin 1/Pin 1): An open-drain output that pulls to GND if the voltage at the FB pin (Pin 5/Pin 6) falls below the FB pin threshold (1.236V). During the start-up cycle, the $\overline{\text{RESET}}$ pin goes high impedance at the end of the second timing cycle after the FB pin goes above the FB threshold. This pin requires an external pull-up resistor to V_{CC}. If an undervoltage lockout condition occurs, the $\overline{\text{RESET}}$ pin pulls low independently of the FB pin to prevent false glitches.

ON (Pin 2/Pin 2): An active high signal used to enable or disable LTC4211 operation. COMP1's high-to-low threshold is set at 1.236V and its hysteresis is set at 80mV. If a logic high signal is applied to the ON pin (V_{ON} > 1.316V), the first timing cycle begins if an overvoltage condition does not exist on the GATE pin (Pin 6/Pin 7). If a logic low signal is applied to the ON pin (V_{ON} < 1.236V), the GATE pin is pulled low by an internal 200µA current sink. The ON pin can also be used to reset the electronic circuit breaker. If the ON pin is cycled low and then high following a circuit breaker trip, the internal circuit breaker is reset, and the LTC4211 begins a new start-up cycle.

TIMER (Pin 3/Pin 4): A capacitor connected from this pin to GND sets the LTC4211's system timing. The LTC4211's initial and second start-up timing cycles and its internal "power good" delay time are defined by this capacitor.

GND (Pin 4/Pin 5): Device Ground Connection. Connect this pin to the system's analog ground plane.

FB (Pin 5/Pin 6): The FB (Feedback) pin is an input to the COMP2 comparator and monitors the output supply voltage through an external resistor divider. If V_{FB} < 1.236V, the $\overline{\text{RESET}}$ pin pulls low. An internal glitch filter at COMP2's output helps prevent negative voltage transients from triggering a reset condition. If V_{FB} > 1.239V, the $\overline{\text{RESET}}$ pin goes high at the end of the second timing cycle.

GATE (Pin 6/Pin 7): The output signal at this pin is the high side gate drive for the external N-channel FET pass transistor.

As shown in the Block Diagram, an internal charge pump supplies a 10µA gate current and sufficient gate voltage drive to the external FET for supply voltages from 2.5V to 16.5V. The internal charge-pump and zener

PIN FUNCTIONS (8-Lead Package/10-Lead Package)

clamps at the GATE pin determine the gate drive voltage ($\Delta V_{GATE} = V_{GATE} - V_{CC}$). The charge pump produces a minimum 4.5V of ΔV_{GATE} for supplies in the range of 2.7V ≤ V_{CC} < 4.75V. For 4.75V ≤ V_{CC} ≤ 12V the ΔV_{GATE} is limited by zener clamp Z1 connected between the GATE and V_{CC} pins. The ΔV_{GATE} is typically at 12V and with guaranteed minimum value of 10V. For V_{CC} > 12V, the Zener clamp Z2 begins to set the limitation for ΔV_{GATE}. Z2 clamps the gate voltage to ground to 26V typically. The minimum Z2's clamp voltage is 23V. This effectively sets ΔV_{GATE} to 8V minimum at V_{CC} = 15V.

SENSE (Pin 7/Pin 8): Circuit Breaker Set Pin. With a sense resistor placed in the power path between V_{CC} and SENSE, the LTC4211's electronic circuit breaker trips if the voltage across the sense resistor exceeds the thresholds set internally for the SLOW COMP and the FAST COMP, as shown in the Block Diagram. The threshold for the SLOW COMP is $V_{CB(SLOW)}$ = 50mV, and the electronic circuit breaker trips if the voltage across the sense resistor exceeds 50mV for 20µs. The SLOW COMP delay is fixed in the S8/MS8 version and adjustable in the MS version of the LTC4211. To adjust the SLOW COMP's delay, please refer to the section on Adjusting SLOW COMP's Response Time.

Under transient conditions where large step current changes can and do occur over shorter periods of time, a second (fast) comparator instead trips the electronic circuit breaker. The threshold for the FAST COMP is set at $V_{CB(FAST)}$ = 150mV, and the circuit breaker trips if the voltage across the sense resistor exceeds 150mV for more than 300ns. The FAST COMP's delay is fixed in the LTC4211 and cannot be adjusted. To disable the electronic circuit breaker, connect the V_{CC} and SENSE pins together.

V_{CC} (Pin 8/Pin 9): This is the positive supply input to the LTC4211. The LTC4211 operates from 2.5V < V_{CC} < 16.5V, and the supply current is typically 1mA. An internal undervoltage lockout circuit disables the device until the voltage at V_{CC} exceeds 2.3V.

$\overline{FAULT}$ (Not available on S8/MS8, Pin 10 MS): $\overline{FAULT}$ is both an input and an output. Connected to this pin are an analog comparator (COMP6) and an open-drain N-channel FET. During normal operation, if COMP6 is driven below 1.236V, the electronic circuit breaker trips and the GATE pin pulls low. Typically, a 10k pull-up resistor connects to the $\overline{FAULT}$ pin. This pull-up is required to allow the LTC4211 to begin a second timing cycle ($V_{\overline{FAULT}}$ > 1.286) and start-up properly. This also allows the use of the $\overline{FAULT}$ pin as a status output. Under normal operating conditions, the $\overline{FAULT}$ output is a logic high. Two conditions cause an active low on $\overline{FAULT}$: (1) the LTC4211's electronic circuit breaker trips because of an output short circuit causing a fast output overcurrent transient (FAST COMP trips circuit breaker); or (2) V_{FILTER} > 1.236V. The $\overline{FAULT}$ output is driven to logic low and is latched logic low until the ON pin is driven to logic low for 150µs (the t_{RESET} duration).

FILTER (Not available S8/MS8, Pin 3 MS): Overcurrent Fault Timing Pin and Overvoltage Fault Set pin. With a capacitor connected from this pin to ground, the SLOW COMP's response time can be adjusted. In the S8/MS8 version of the LTC4211, the FILTER pin is not available and the delay time from overcurrent detect to GATE OFF is fixed at 20µs.

BLOCK DIAGRAM

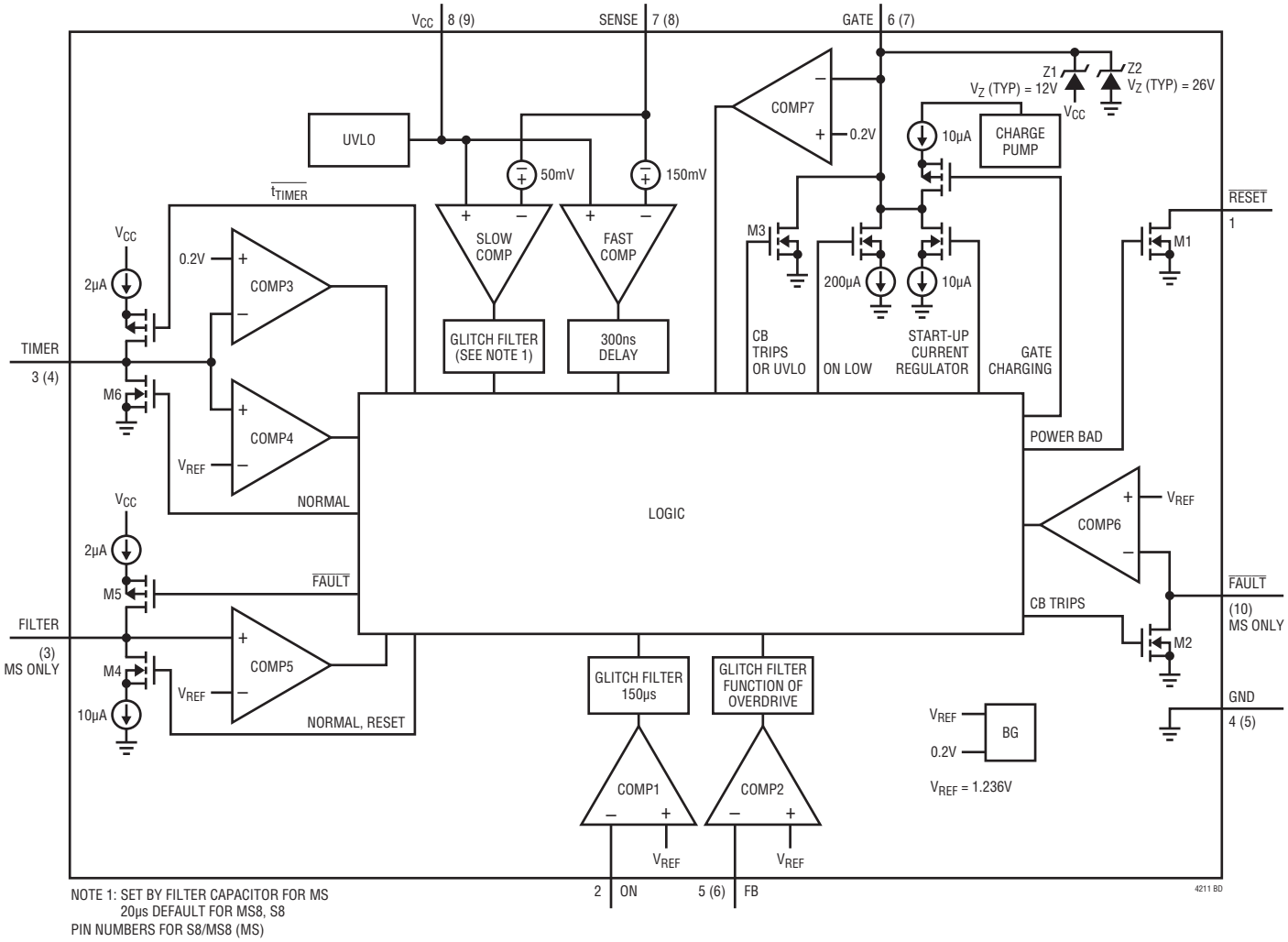

NOTE 1: SET BY FILTER CAPACITOR FOR MS
20µs DEFAULT FOR MS8, S8
PIN NUMBERS FOR S8/MS8 (MS)

OPERATION

HOT CIRCUIT INSERTION

When circuit boards are inserted into or removed from live backplanes, the supply bypass capacitors can draw huge transient currents from the backplane power bus as they charge. The transient current can cause permanent damage to the connector pins as well as cause glitches on the system supply, causing other boards in the system to reset.

The LTC4211 is designed to turn a printed circuit board's supply voltages ON and OFF in a controlled manner, allowing the circuit board to be safely inserted or removed from a live backplane. The device provides a system reset signal to indicate when board supply voltage drops below a predetermined level, as well as a dual function fault monitor.

OUTPUT VOLTAGE MONITOR

The LTC4211 uses a 1.236V bandgap reference, precision voltage comparator and an external resistor divider to monitor the output supply voltage as shown in Figure 1.

The operation of the supply monitor in normal mode is illustrated in Figure 2. When the voltage at the FB pin drops below its reset threshold (1.236V), the comparator COMP2 output goes high. After a glitch filter delay, $\overline{\text{RESET}}$ is pulled low (Time Point 1). When the voltage at the FB pin rises above its reset threshold (1.239V), COMP2's output goes low and a timing cycle starts (Time Point 4). After a complete timing cycle, $\overline{\text{RESET}}$ is pulled high by the external pull-up resistor. If the FB pin rises above the reset threshold for less than a timing cycle, the $\overline{\text{RESET}}$ output remains low (Time Points 2 to 3).

As shown in Figure 5, the LTC4211's $\overline{\text{RESET}}$ pin is logic low during any undervoltage lockout condition and during the initial insertion of a PC board. Under normal operation, $\overline{\text{RESET}}$ goes to logic high at the end of the soft-start cycle only after the FB pin voltage rises above its reset threshold of 1.239V.

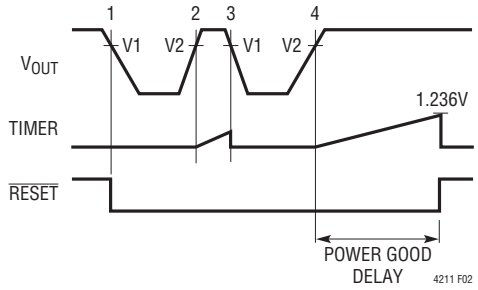

Figure 2. Supply Monitor Waveforms in Normal Mode

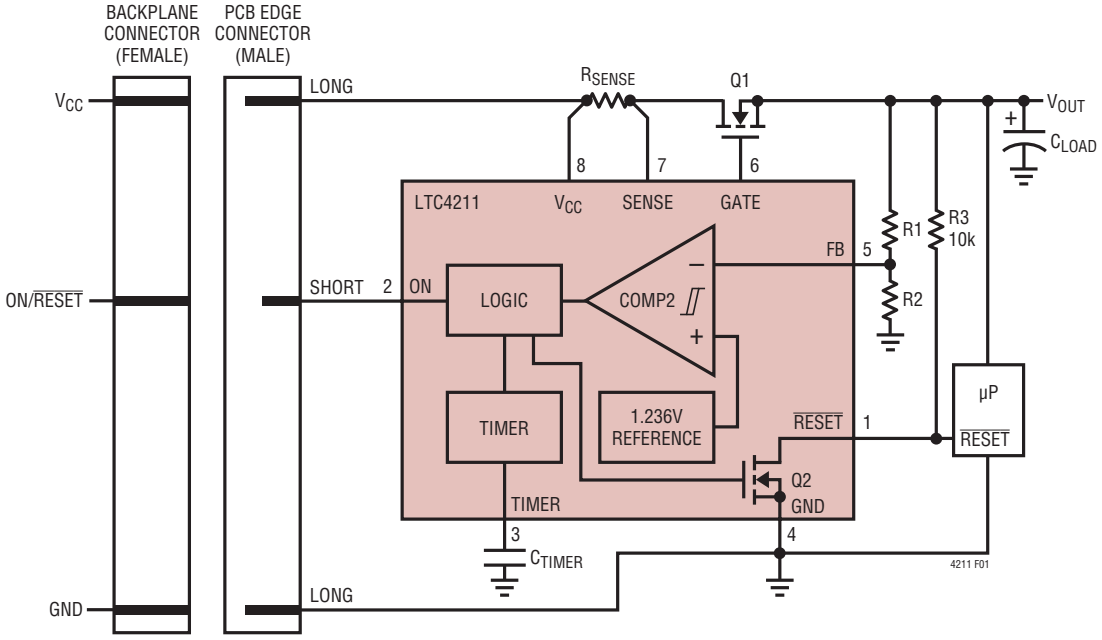

Figure 1. Supply Voltage Monitor Block Diagram

OPERATION

UNDERVOLTAGE LOCKOUT

The LTC4211's power-on reset circuit initializes the start-up procedure and ensures the chip is in the proper state if the input supply voltage is too low. If the supply voltage falls below 2.18V, the LTC4211 is in undervoltage lockout (UVLO) mode, and the GATE pin is pulled low. Since the UVLO circuitry uses hysteresis, the chip restarts after the supply voltage rises above 2.3V and the ON pin goes high.

In addition, users can utilize the ON comparator (COMP1) or the $\overline{\text{FAULT}}$ comparator (COMP6) to effectively program a higher undervoltage lockout level. Figure 3 shows how the external resistor divider at the ON pin programs the system's undervoltage lockout voltage. The system will enter the plug-in cycle after the ON pin rises above 1.316V. The resistor divider sets the circuit to turn on when V_{CC} reaches around 79% of its final value. If a different turn on V_{CC} voltage is desired change the resistor divider values accordingly. Alternatively, the $\overline{\text{FAULT}}$ comparator can be used to configure the external undervoltage lockout level. If the $\overline{\text{FAULT}}$ comparator is used for this purpose, the system will wait for the input voltage to increase above the level set by the user before starting the second timing cycle. Also, if the input voltage drops below the set level in normal operating mode, the user must cycle the ON pin or V_{CC} to restart the system.

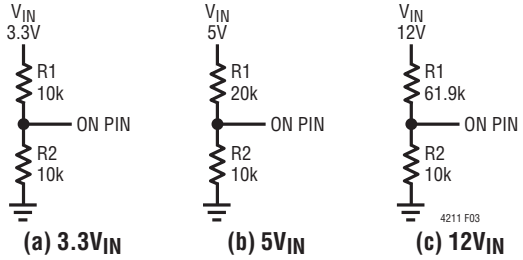

Figure 3. ON Pin Sets the Undervoltage Lockout Voltage Externally

GLITCH FILTER FOR $\overline{\text{RESET}}$

The LTC4211 has a glitch filter to prevent transients on the FB pin from generating a system reset. The relationship between glitch filter time and the FB transient voltage is shown in Figure 4.

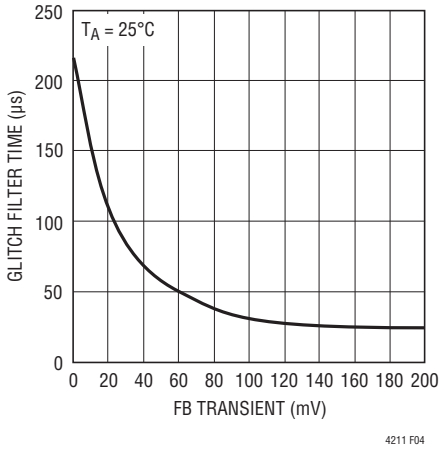

Figure 4. FB Comparator Glitch Filter Time vs Feedback Transient Voltage

SYSTEM TIMING

System timing for the LTC4211 is generated at the TIMER pin (see the Block Diagram). If the LTC4211's internal timing circuit is off, an internal N-channel FET connects the TIMER pin to GND. If the timing circuit is enabled, an internal 2µA current source is then connected to the TIMER pin to charge C_{TIMER} at a rate given by Equation 1:

$$C_{TIMER}\ \text{Charge-Up Rate} = \frac{2\mu A}{C_{TIMER}} \quad (1)$$

When the TIMER pin voltage reaches COMP4's threshold of 1.236V, the TIMER pin is reset to GND. Equation 2 gives an expression for the timer period:

$$t_{TIMER} = 1.236V \bullet \frac{C_{TIMER}}{2\mu A} \quad (2)$$

As a design aid, the LTC4211's timer period as a function of the C_{TIMER} using standard values from 3.3nF to 0.33µF is shown in Table 1.

OPERATION

Table 1. t_{TIMER} vs C_{TIMER}

C_{TIMER}	t_{TIMER}
0.0033µF	2.0ms
0.0047µF	2.9ms
0.0068µF	4.2ms
0.0082µF	5.1ms
0.01µF	6.2ms
0.015µF	9.3ms
0.022µF	13.6ms
0.033µF	20.4ms
0.047µF	29.0ms
0.068µF	42.0ms
0.082µF	50.7ms
0.1µF	61.8ms
0.15µF	92.7ms
0.22µF	136ms
0.33µF	204ms

The C_{TIMER} value is vital to ensure a proper start-up and reliable operation. A system may not start up if a timing period is set too short relative to the time needed for the output voltage to ramp up from zero to its rated value. Conversely, this timing period should not be too long as an output short can occur at start-up causing the external MOSFET to overheat. A good starting point is to set C_{TIMER} = 10nF and adjust its value accordingly to suit the specific applications.

OPERATING SEQUENCE

Power-Up, Start-Up Check and Plug-In Timing Cycle

The sequence of operation for the LTC4211 is illustrated in the timing diagram of Figure 5. When a PC board is inserted into a live backplane, the LTC4211 first performs

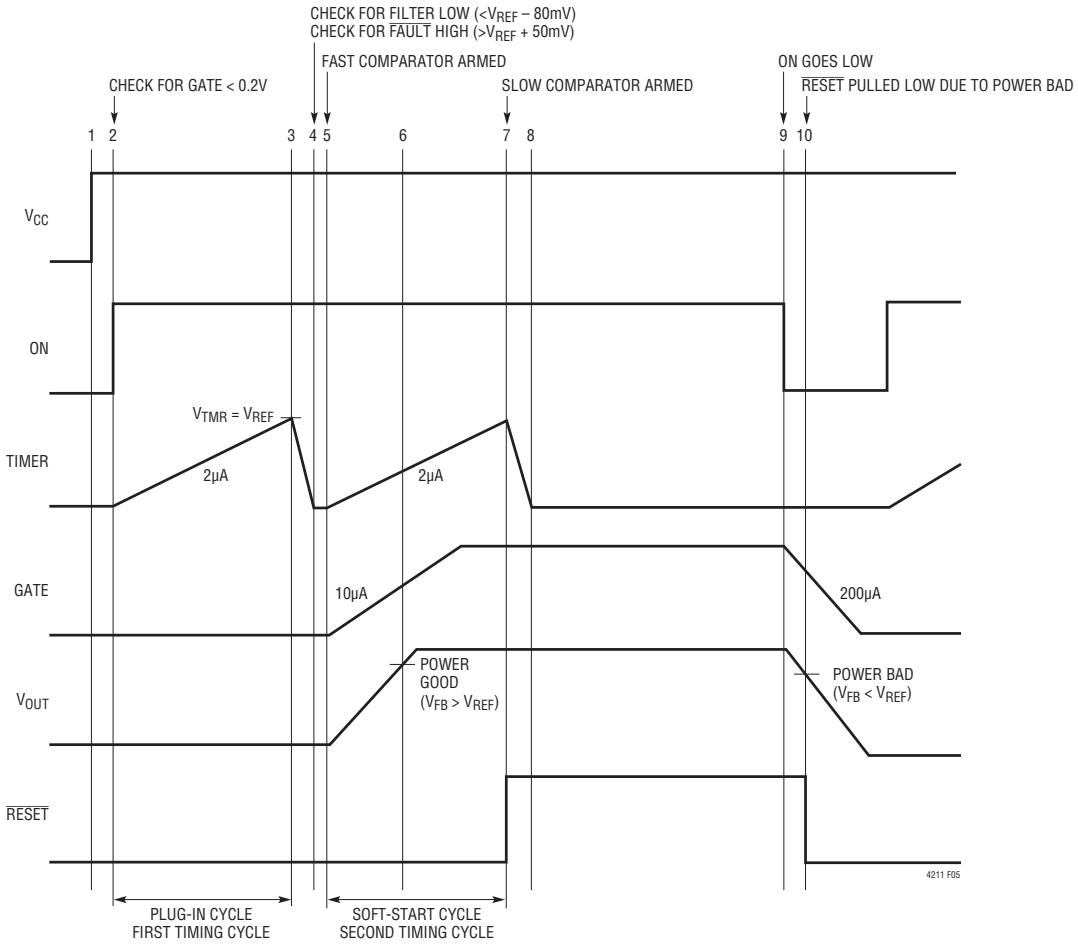

Figure 5. Normal Power-Up Sequence

OPERATION

a start-up check to make sure the supply voltage is above its 2.3V UVLO threshold (see Time Point 1). If the input supply voltage is valid, the gate of the external pass transistor is pulled to ground by the internal 200µA current source connected at the GATE pin. The TIMER pin is held low by an internal N-channel pull-down transistor (see M6, LTC4211 Block Diagram) and the FILTER pin voltage is pulled to ground by an internal 10µA current source.

Once V_{CC} and ON (the ON pin is >1.316) are valid, the LTC4211 checks to make sure that GATE is OFF (V_{GATE} < 0.2V) at Time Point 2. An internal timing circuit is enabled and the TIMER pin voltage ramps up at the rate described by Equation 1. At Time Point 3 (the timing period programmed by C_{TIMER}), the TIMER pin voltage equals V_{TMR} (1.236V). Next, the TIMER pin voltage ramps down to Time Point 4 where the LTC4211 performs two checks: (1) FILTER pin voltage is low (V_{FILTER} < 1.156V) and (2) $\overline{FAULT}$ pin voltage is high ($V_{\overline{FAULT}}$ > 1.286V). If both conditions are met, the LTC4211 begins a second timing (soft-start) cycle.

Second Timing (Soft-Start) Cycle

At the beginning of the second timing cycle (Time Point 5), the LTC4211's FAST COMP is armed and an internal 10µA current source working with an internal charge pump provides the gate drive to the external pass transistor. The LTC4211 automatically limits the inrush current in one of two ways: by controlling the GATE pin voltage slew rate or by actively limiting the inrush current. If GATE voltage slew rate control is preferred, an external capacitor C_{GATE} can be used from GATE to ground, as shown in Figure 6.

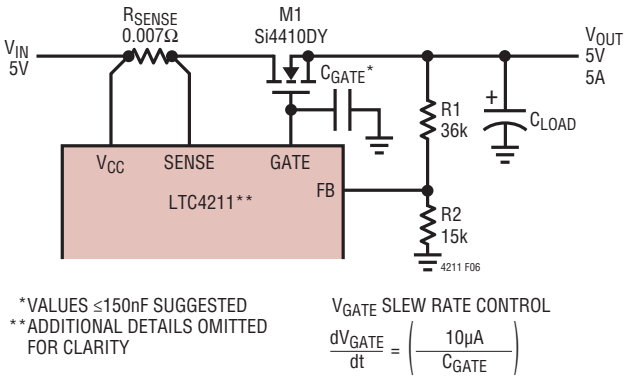

Figure 6. Using an External Capacitor at GATE for GATE Voltage Slew Rate Control

An expression for the GATE voltage slew rate is given by Equation 3:

$$V_{GATE}\ \text{Slew Rate}, \frac{dV_{GATE}}{dt} = \frac{10\mu A}{C_{GATE}} \quad (3)$$

Adding C_{GATE} slows the GATE voltage slew rate at the expense of slower system turn-on and turn-off time. Should this technique be used, values for C_{GATE} less than 150nF are recommended.

The inrush current being delivered to the load while the GATE is ramping is dependent on C_{LOAD} and C_{GATE}. Equation 4 gives an expression for the inrush current during the second timing cycle:

$$I_{INRUSH} = \frac{dV_{GATE}}{dt} \bullet C_{LOAD} = 10\mu A \bullet \frac{C_{LOAD}}{C_{GATE}} \quad (4)$$

For example, if C_{GATE} = 3300pF and C_{LOAD} = 2000µF, the inrush current charging C_{LOAD} is:

$$I_{INRUSH} = 10\mu A \bullet \frac{2000\mu F}{0.0033\mu F} = 6.06A \quad (5)$$

At Time Point 6, the output voltage trips COMP2's threshold, signaling an output voltage "power good" condition. At Time Point 7, $\overline{RESET}$ is asserted high, SLOW COMP is armed and the LTC4211 enters a fault monitor mode. The TIMER voltage then ramps down to Time Point 8.

Power-Off Cycle

As shown at Time Point 9, an external hard reset is initiated by pulling the ON pin low (V_{ON} < 1.236V). The GATE pin voltage is ramped to ground by the internal 200µA current source, discharging C_{GATE} and turning off the pass transistor. As C_{LOAD} discharges, the output voltage crosses COMP2's threshold, signaling a "power bad" condition at Time Point 10. At this point, $\overline{RESET}$ is asserted low.

OPERATION

SOFT-START WITH CURRENT LIMITING

During the second timing cycle, the inrush current was described by Equation 4. Note that there is a one-to-one correspondence in the inrush current to C_{LOAD}. If the inrush current is large enough to cause a voltage drop greater than 50mV across the sense resistor, an internal servo loop controls the operation of the 10µA current source at the GATE pin to regulate the load current to:

$$I_{LIMIT(SOFTSTART)} = \frac{50mV}{R_{SENSE}} \quad (6)$$

For example, the inrush current is limited to 5A when $R_{SENSE} = 0.01\Omega$.

In this fashion, the inrush current is controlled and C_{LOAD} is charged up slowly during the soft-start cycle.

The timing diagram in Figure 7 illustrates the operation of the LTC4211 in a normal power-up sequence with limited inrush current as described by Equation 6. At Time Point 5, the GATE pin voltage begins to ramp and the power MOSFET starts to charge C_{LOAD}. At Time Point 5A, the inrush current causes a 50mV voltage drop across R_{SENSE} and the internal servo loop engages, limiting the inrush current to a fixed level. At Time Point 6, the GATE pin voltage continues to ramp as C_{LOAD} charges until V_{OUT} reaches its final value. The charging current reduces, and the internal servo loop disengages. At the end of the soft-start cycle (Time Point 7), $\overline{RESET}$ is high and SLOW COMP is armed.

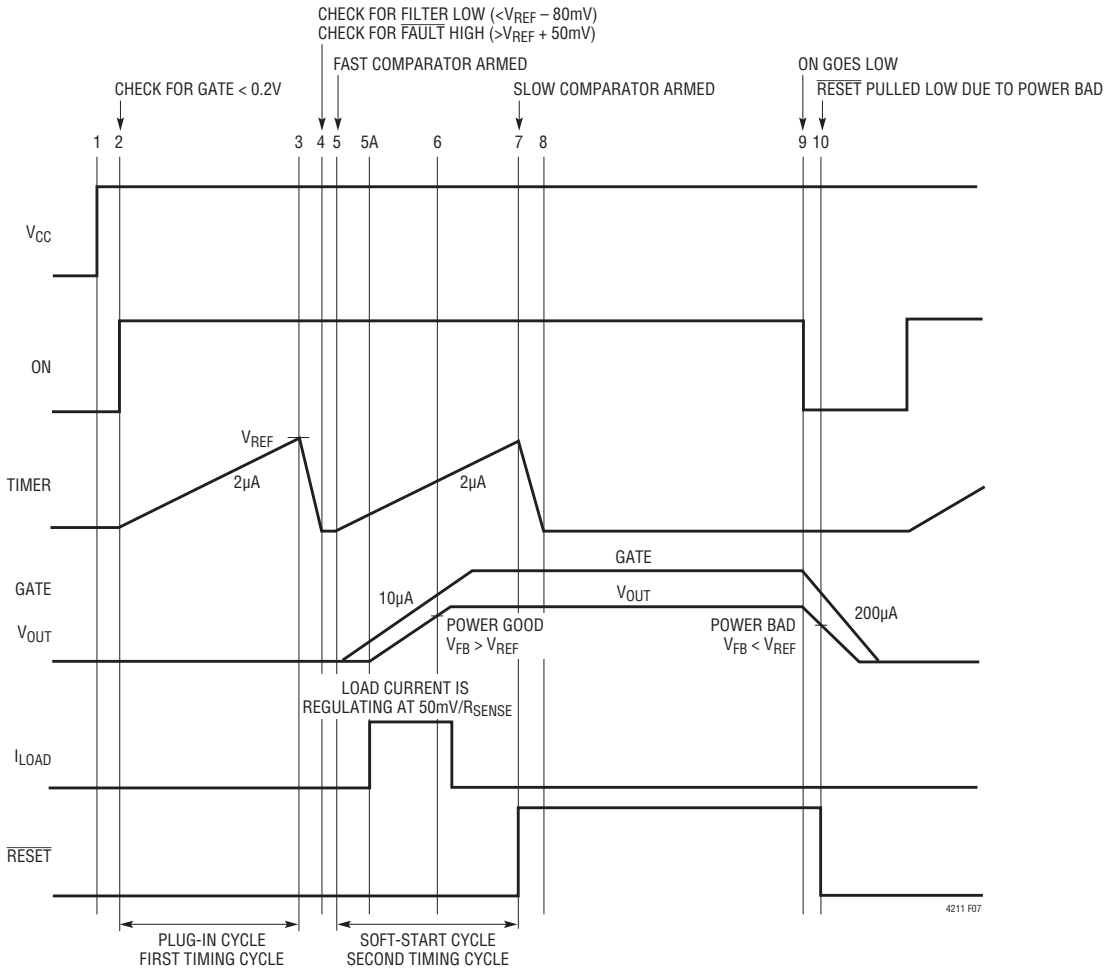

Figure 7. Normal Power-Up Sequence (with Current Limiting in Second Timing Cycle)

OPERATION

FREQUENCY COMPENSATION AT SOFT-START

If the external gate capacitance is greater than 600pF, no external gate capacitor is required at GATE to stabilize the internal current-limiting loop during soft-start. Otherwise, connect a gate capacitor between the GATE pin and ground to increase the total gate capacitance to be equal to or above 600pF. The servo loop that controls the external MOSFET during current limiting has a unity-gain frequency of about 105kHz and phase margin of 80° for external MOSFET gate input capacitances to 2.5nF.

USING AN EXTERNAL GATE CAPACITOR

In addition to reducing the inrush current (Equation 4), an external gate capacitor (Figure 6) may also be useful to decrease or eliminate current spikes through the MOSFET when power is first applied. At power-up, the instantaneous input voltage step attempts to pull the MOSFET gate up through the MOSFET's drain-to-gate capacitance. If the MOSFET's C_{GS} is small, the gate can be pulled up high enough to turn on the MOSFET, thereby allowing a current spike to the output. This event occurs during the time that the LTC4211 is coming out of UVLO and getting its intelligence to hold the GATE pin low. An external capacitor attenuates the voltage to which the GATE is pulled up and eliminates the current spike. The value required is dependent on the MOSFET capacitance specifications. In typical applications, this capacitor is not required.

ELECTRONIC CIRCUIT BREAKER

The LTC4211 features an electronic circuit breaker function that protects against externally-generated fault conditions and shorts or excessive load current and can also be configured to protect against input supply overvoltage. If the circuit breaker trips, the GATE pin is immediately pulled to ground, the external N-channel MOSFET is quickly turned OFF and $\overline{FAULT}$ is latched low.

The circuit breaker trips whenever the voltage across the sense resistor exceeds two different levels, set by the LTC4211's SLOW COMP and FAST COMP thresholds (see Block Diagram). The SLOW COMP trips the circuit breaker if the voltage across the SENSE resistor (V_{CC} – V_{SENSE} = V_{CB}) is greater than 50mV for 20µs. There may be applications where this comparator's response time is not long enough, for example, because of excessive supply voltage noise. To adjust the response time of the SLOW COMP, the MS version of the LTC4211 is chosen and a capacitor is used at the LTC4211's FILTER pin (see section on Adjusting SLOW Comp's Response Time). The FAST COMP trips the circuit breaker to protect against fast load overcurrents if the transient voltage across the sense resistor is greater than 150mV for 300ns. The response time of the LTC4211's FAST COMP is fixed.

The timing diagram of Figure 7 illustrates when the LTC4211's electronic circuit breaker is armed. After the first timing cycle, the LTC4211's FAST COMP is armed at Time Point 5. Arming FAST COMP at Time Point 5 ensures that the system is protected against a short-circuit condition during the second timing cycle. At Time Point 7, SLOW COMP is armed when the internal control loop is disengaged.

The timing diagrams in Figures 8 and 9 illustrate the operation of the LTC4211 when the load current conditions exceed the thresholds of the FAST COMP ($V_{CB(FAST)}$ > 150mV) and SLOW COMP ($V_{CB(SLOW)}$ > 50mV), respectively.

RESETTING THE ELECTRONIC CIRCUIT BREAKER

Once the LTC4211's circuit breaker is tripped, $\overline{FAULT}$ is asserted low and the GATE pin is pulled to ground. The LTC4211 remains latched OFF in this fault state until the external fault is cleared. To clear the internal fault detect circuitry and to restart the LTC4211, its ON pin must be driven low (V_{ON} < 1.236V) for at least 150µs, after which time $\overline{FAULT}$ goes high. Toggling the ON pin from low to high (V_{ON} > 1.316V) initiates a restart sequence in the LTC4211. The timing diagram in Figure 10 illustrates a start-up sequence where the LTC4211 is powered up into a load overcurrent condition. Note that the circuit breaker trips at Time Point B and is reset at Time Point 9A.

OPERATION

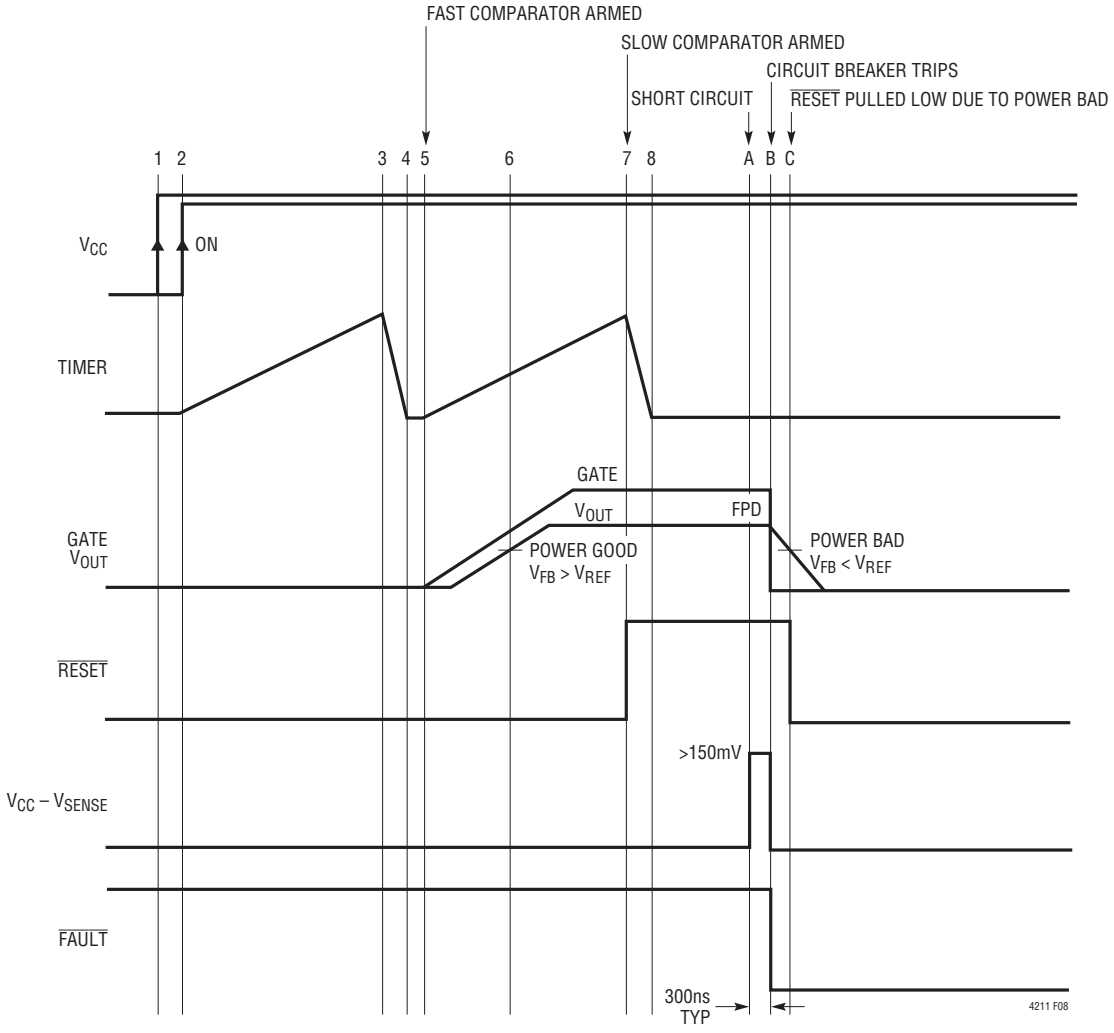

Figure 8. Output Short Circuit Causes Fast Comparator to Trip the Circuit Breaker

OPERATION

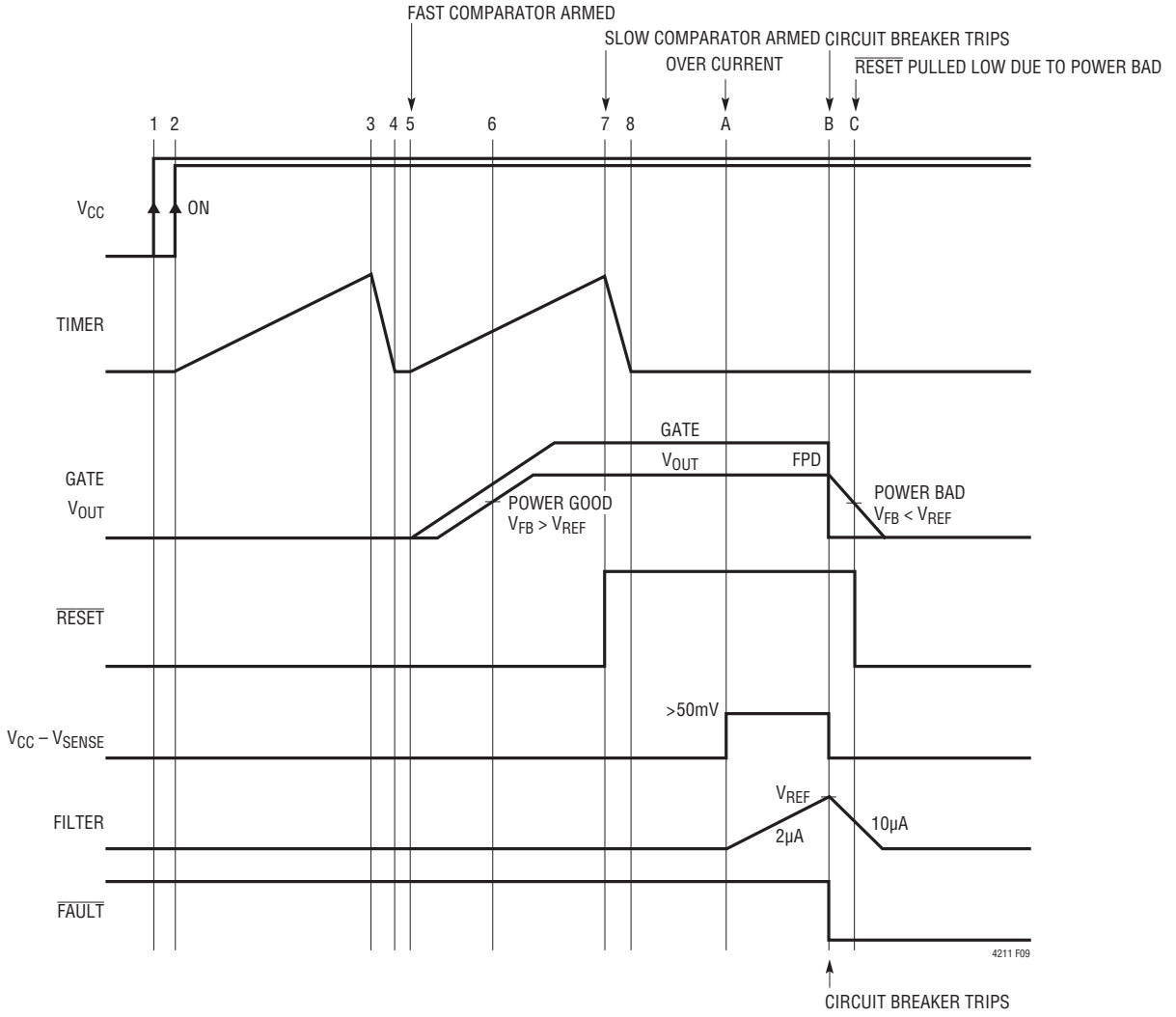

Figure 9. Mild Overcurrent Slow Comparator Trips the Circuit Breaker After Filter Programming Period

OPERATION

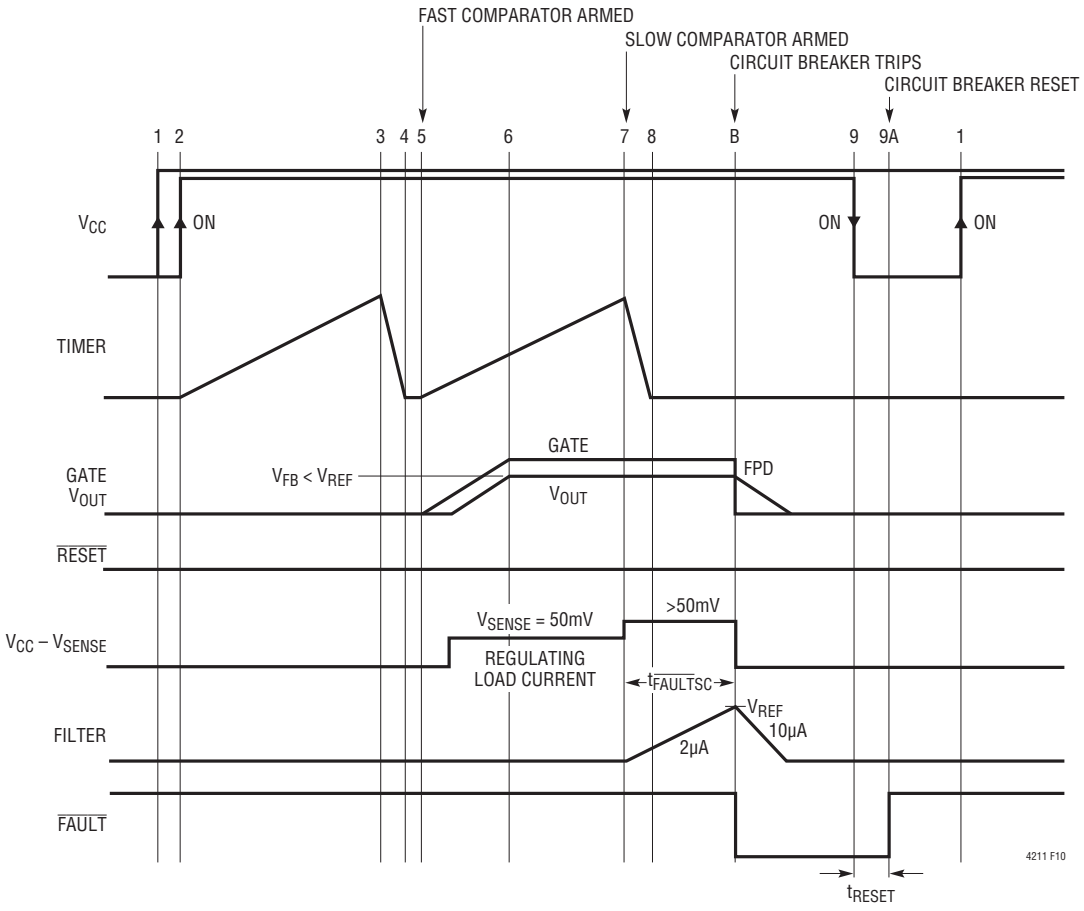

Figure 10. Power-Up in Overcurrent, Slow Comparator Trips the Circuit Breaker

ADJUSTING SLOW COMP'S RESPONSE TIME

The response time of SLOW COMP is adjusted using a capacitor connected from the LTC4211's FILTER pin to ground. If this pin is left unused, SLOW COMP's delay defaults to 20µs. During normal operation, the FILTER output pin is held low as an internal 10µA pull-down current source is connected to this pin by transistor M4. This pull-down current source is turned off when an overcurrent load condition is detected by SLOW COMP. During an overcurrent condition, the internal 2µA pull-up current source is connected to the FILTER pin by transistor M5, thereby charging C_{FILTER}. As the charge on the capacitor accumulates, the voltage across C_{FILTER} increases. Once the FILTER pin voltage increases to 1.236V, the electronic circuit breaker trips and the LTC4211's GATE pin is switched quickly to ground by transistor M3. After the circuit breaker is tripped, M5 is turned OFF, M4 is turned ON and the 10µA pull-down current then holds the FILTER pin voltage low.

The SLOW COMP response time from an overcurrent fault condition to when the circuit breaker trips (GATE OFF) is given by Equation 7:

$$t_{SLOWCOMP} = 1.236V \bullet \frac{C_{FILTER}}{2\mu A} + 20\mu s \qquad (7)$$

For example, if C_{FILTER} = 1000pF, SLOW COMP's response time = 638µs. As a design aid, SLOW COMP's delay time ($t_{SLOW\ COMP}$) versus C_{FILTER} for standard values of C_{FILTER} from 100pF to 1000pF is illustrated in Table 2.

OPERATION

Table 2. $t_{SLOWCOMP}$ vs C_{FILTER}

C_{FILTER}	$t_{SLOWCOMP}$
100pF	82µs
220pF	156µs
330pF	224µs
470pF	310µs
680pF	440µs
820pF	527µs
1000pF	638µs

SENSE RESISTOR CONSIDERATIONS

The fault current level at which the LTC4211's internal electronic circuit breaker trips is determined by a sense resistor connected between the LTC4211's V_{CC} and SENSE pins and two separate trip points. The first trip point is set by the SLOW COMP's threshold, $V_{CB(SLOW)}$ = 50mV, and occurs should a load current fault condition exist for more than 20µs. The current level at which the electronic circuit breaker trips is given by Equation 8:

$$I_{TRIP(SLOW)} = \frac{V_{CB(SLOW)}}{R_{SENSE}} = \frac{50mV}{R_{SENSE}} \quad (8)$$

The second trip point is set by the FAST COMP's threshold, $V_{CB(FAST)}$ = 150mV, and occurs during fast load current transients that exist for 300ns or longer. The current level at which the circuit breaker trips in this case is given by Equation 9:

$$I_{TRIP(FAST)} = \frac{V_{CB(FAST)}}{R_{SENSE}} = \frac{150mV}{R_{SENSE}} \quad (9)$$

As a design aid, the currents at which the electronic circuit breaker trips for common values for R_{SENSE} are shown in Table 3.

Table 3. $I_{TRIP(SLOW)}$ and $I_{TRIP(FAST)}$ vs R_{SENSE}

R_{SENSE}	$I_{TRIP(SLOW)}$	$I_{TRIP(FAST)}$
0.005Ω	10A	30A
0.006Ω	8.3A	25A
0.007Ω	7.1A	21A
0.008Ω	6.3A	19A
0.009Ω	5.6A	17A
0.01Ω	5A	15A

For proper circuit breaker operation, Kelvin-sense PCB connections between the sense resistor and the LTC4211's V_{CC} and SENSE pins are strongly recommended. The drawing in Figure 11 illustrates the correct way of making connections between the LTC4211 and the sense resistor. PCB layout should be balanced and symmetrical to minimize wiring errors. In addition, the PCB layout for the sense resistor should include good thermal management techniques for optimal sense resistor power dissipation.

The power rating of the sense resistor should accommodate steady-state fault current levels so that the component is not damaged before the circuit breaker trips. Table 4 in the Appendix lists sense resistors that can be used with the LTC4211's circuit breaker.

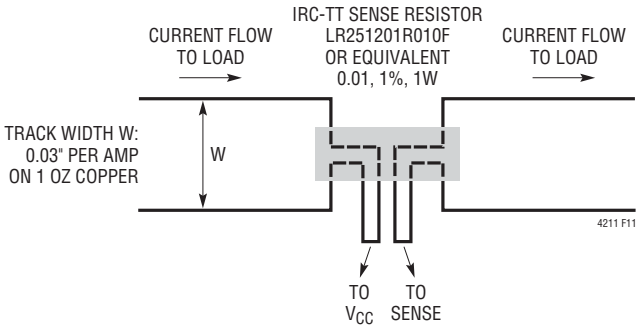

Figure 11. Making PCB Connections to the Sense Resistor

CALCULATING CIRCUIT BREAKER TRIP CURRENT

For a selected R_{SENSE} value, the nominal load current that trips the circuit breaker is given by Equation 10:

$$I_{TRIP(NOM)} = \frac{V_{CB(NOM)}}{R_{SENSE(NOM)}} = \frac{50mV}{R_{SENSE(NOM)}} \quad (10)$$

The minimum load current that trips the circuit breaker is given by Equation 11.

$$I_{TRIP(MIN)} = \frac{V_{CB(MIN)}}{R_{SENSE(MAX)}} = \frac{40mV}{R_{SENSE(MAX)}} \quad (11)$$

where

$$R_{SENSE(MAX)} = R_{SENSE(NOM)} \bullet \left[1 + \left(\frac{R_{TOL}}{100}\right)\right]$$

OPERATION

The maximum load current that trips the circuit breaker is given in Equation 12.

$$I_{TRIP(MAX)} = \frac{V_{CB(MAX)}}{R_{SENSE(MIN)}} = \frac{60mV}{R_{SENSE(MIN)}} \quad (12)$$

where

$$R_{SENSE(MIN)} = R_{SENSE(NOM)} \bullet \left[1 - \left(\frac{R_{TOL}}{100}\right)\right]$$

For example:

If a sense resistor with 7mΩ ±5% R_{TOL} is used for current limiting, the nominal trip current $I_{TRIP(NOM)}$ = 7.1A. From Equations 11 and 12, $I_{TRIP(MIN)}$ = 5.4A and $I_{TRIP(MAX)}$ = 9.02A respectively.

For proper operation and to avoid the circuit breaker tripping unnecessarily, the minimum trip current ($I_{TRIP(MIN)}$) must exceed the circuit's maximum operating load current. For reliability purposes, the operation at the maximum trip current ($I_{TRIP(MAX)}$) must be evaluated carefully. If necessary, two resistors with the same R_{TOL} can be connected in parallel to yield an $R_{SENSE(NOM)}$ value that fits the circuit requirements.

POWER MOSFET SELECTION CRITERIA

To start the power MOSFET selection process, choose the maximum drain-to-source voltage, $V_{DS(MAX)}$, and the maximum drain current, $I_{D(MAX)}$ of the MOSFET. The $V_{DS(MAX)}$ rating must exceed the maximum input supply voltage (including surges, spikes, ringing, etc.) and the $I_{D(MAX)}$ rating must exceed the maximum short-circuit current in the system during a fault condition. In addition, consider three other key parameters: 1) the required gate-source (V_{GS}) voltage drive, 2) the voltage drop across the drain-to-source on resistance, $R_{DS(ON)}$ and 3) the maximum junction temperature rating of the MOSFET.

Power MOSFETs are classified into three categories: standard MOSFETs ($R_{DS(ON)}$ specified at V_{GS} = 10V) logic-level MOSFETs ($R_{DS(ON)}$ specified at V_{GS} = 5V), and sub-logic-level MOSFETs ($R_{DS(ON)}$ specified at V_{GS} = 2.5V). The absolute maximum rating for V_{GS} is typically ±20V for standard MOSFETs. However, the V_{GS} maximum rating for logic-level MOSFETs ranges from ±8V to ±20V depending upon the manufacturer and the specific part number. The LTC4211's GATE overdrive as a function of V_{CC} is illustrated in the Typical Performance curves. Logic-level and sub-logic-level MOSFETs are recommended for low supply voltage applications and standard MOSFETs can be used for applications where supply voltage is greater than 4.75V.

Note that in some applications, the gate of the external MOSFET can discharge faster than the output voltage when the circuit breaker is tripped. This causes a negative V_{GS} voltage on the external MOSFET. Usually, the selected external MOSFET should have a ±$V_{GS(MAX)}$ rating that is higher than the operating input supply voltage to ensure that the external MOSFET is not destroyed by a negative V_{GS} voltage. In addition, the ±$V_{GS(MAX)}$ rating of the MOSFET must be higher than the gate overdrive voltage. Lower ±$V_{GS(MAX)}$ rating MOSFETs can be used with the LTC4211 if the GATE overdrive is clamped to a lower voltage. The circuit in Figure 12 illustrates the use of Zener diodes to clamp the LTC4211's GATE overdrive signal if lower voltage MOSFETs are used.

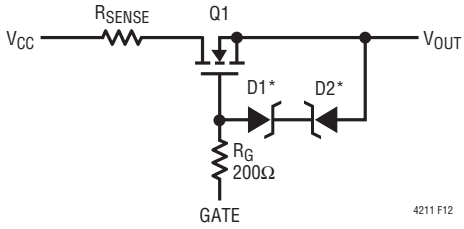

*USER SELECTED VOLTAGE CLAMP
(A LOW BIAS CURRENT ZENER DIODE IS RECOMMENDED)
1N4688 (5V)
1N4692 (7V): LOGIC-LEVEL MOSFET
1N4695 (9V)
1N4702 (15V): STANDARD-LEVEL MOSFET

Figure 12. Optional Gate Clamp for Lower $V_{GS(MAX)}$ MOSFETs

The $R_{DS(ON)}$ of the external pass transistor should be low to make its drain-source voltage (V_{DS}) a small percentage of V_{CC}. At a V_{CC} = 2.5V, V_{DS} + V_{RSENSE} = 0.1V yields 4% error at the output voltage. This restricts the choice of MOSFETs to very low $R_{DS(ON)}$. At higher V_{CC} voltages, the V_{DS} requirement can be relaxed in which case MOSFET package dissipation (P_D and T_J) may limit the value of

OPERATION

$R_{DS(ON)}$. Table 5 lists some power MOSFETs that can be used with the LTC4211.

For reliable circuit operation, the maximum junction temperature ($T_{J(MAX)}$) for a power MOSFET should not exceed the manufacturer's recommended value. This includes normal mode operation, start-up, current-limit and autoretry mode in a fault condition. Under normal conditions the junction temperature of a power MOSFET is given by Equation 13:

MOSFET Junction Temperature,

$$T_{J(MAX)} \leq T_{A(MAX)} + \theta_{JA} \bullet P_D \quad (13)$$

where

$P_D = (I_{LOAD})^2 \bullet R_{DS(ON)}$

θ_{JA} = junction-to-ambient thermal resistance

$T_{A(MAX)}$ = maximum ambient temperature

If a short circuit happens during start-up, the external MOSFET can experience a big single pulse energy. This is especially true if the applications only employ a small gate capacitor or no gate capacitor at all. Consult the safe operating area (SOA) curve of the selected MOSFET to ensure that the $T_{J(MAX)}$ is not exceeded during start-up.

USING STAGGERED PIN CONNECTORS

The LTC4211 can be used on either a printed circuit board or on the backplane side of the connector, and examples for both are shown in Figures 13 and 14. Printed circuit board edge connectors with staggered pins are recommended as the insertion and removal of circuit boards do sequence the pin connections. Supply voltage and ground connections on the printed circuit board should be wired to the edge connector's long pins or blades. Control and status signals (like $\overline{RESET}$, $\overline{FAULT}$ and ON) passing through the card's edge connector should be wired to short length pins or blades.

PCB CONNECTION SENSE

There are a number of ways to use the LTC4211's ON pin to detect whether the printed circuit board has been fully seated in the backplane before the LTC4211 commences a start-up cycle.

The first example is shown in the schematic on the front page of this data sheet. In this case, the LTC4211 is mounted on the PCB and a 20k/10k resistive divider is connected to the ON pin. On the edge connector, R1 is wired to a short pin. Until the connectors are fully mated, the ON pin is held low, keeping the LTC4211 in an OFF state. Once the connectors are mated, the resistive divider is connected to V_{CC}, $V_{ON} > 1.316V$ and the LTC4211 begins a start-up cycle.

In Figure 13, an LTC4211 is illustrated in a basic configuration on a PCB daughter card. The ON pin is connected to V_{CC} on the backplane through a 10k pull-up resistor once the card is seated into the backplane. R2 bleeds off any potential static charge which might exist on the backplane, the connector or during card installation.

A third example is shown in Figure 14 where the LTC4211 is mounted on the backplane. In this example, a 2N2222 transistor and a pair of resistors (R4, R5) form the PCB connection sense circuit. With the card out of the chassis, Q2's base is biased to V_{CC} through R5, biasing Q2 ON and driving the LTC4211's ON pin low. The base of Q2 is also wired to a socket on the backplane connector. When a card is firmly seated into the backplane, the base of Q2 is then grounded through a short pin connection on the card. Q2 is biased OFF, the LTC4211's ON pin is pulled-up to V_{CC} and a start-up cycle begins.

In the previous three examples, the connection sense was hard wired with no processor (low) interrupt capability. As illustrated in Figure 15, the addition of an inexpensive logic-level discrete MOSFET and a couple of resistors offers processor interrupt control to the connection sense. R4 keeps the gate of M2 at V_{CC} until the card is firmly mated to the backplane. A logic low for the $\overline{ON}$/OFF signal turns M2 OFF, allows the ON pin to pull high and turns on the LTC4211.

APPLICATIONS INFORMATION

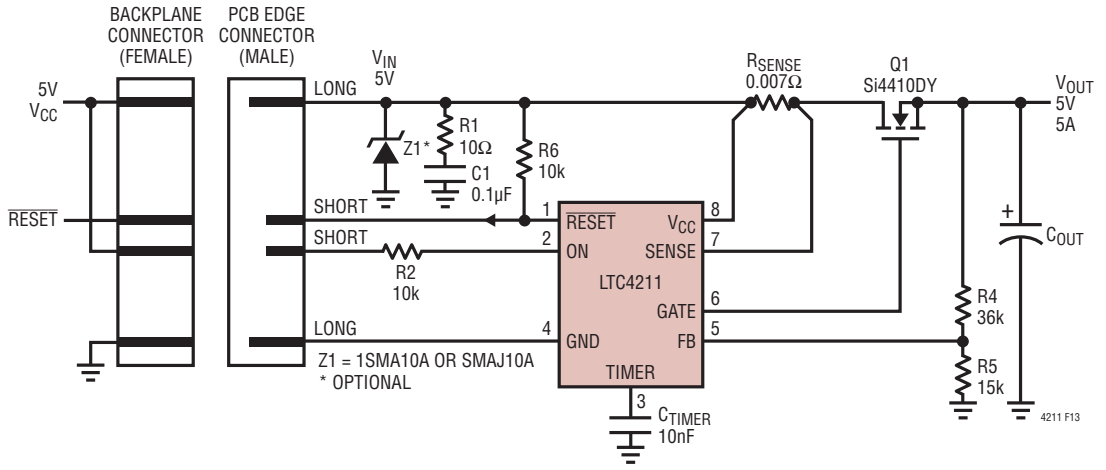

Figure 13. Hot Swap Controller On Daughter Board (Staggered Pin Connections)

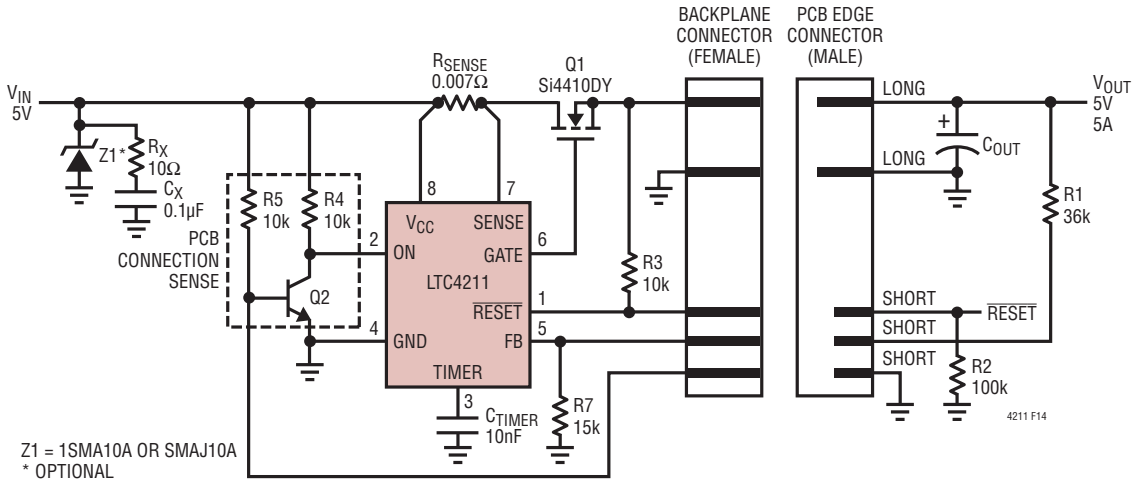

Figure 14. Hot Swap Controller on Backplane (Staggered Pin Connections)

A more elaborate connection sense scheme is shown in Figure 16. The bases of Q1 and Q2 are wired to short pins located on opposite ends of the edge connector because the installation/removal of printed circuit cards generally requires rocking the card back and forth. When V_{CC} makes connection, the bases of transistors Q1 and Q2 are pulled high, biasing them ON. When either one of them is ON, the LTC4211's ON pin is held low, keeping the LTC4211 OFF. When both the short base connector pins of Q1 and Q2 finally mate to the backplane, their bases are grounded, biasing the transistors OFF. The ON pin voltage is then pulled high by R3 enabling the LTC4211 and a power-up cycle begins.

A software-initiated power-down cycle can be started by momentarily driving transistor M1 with a logic high signal. This in turn will drive the LTC4211's ON pin low. If the ON pin is held low for more than 8µs, the LTC4211's GATE pin is switched to ground.

APPLICATIONS INFORMATION

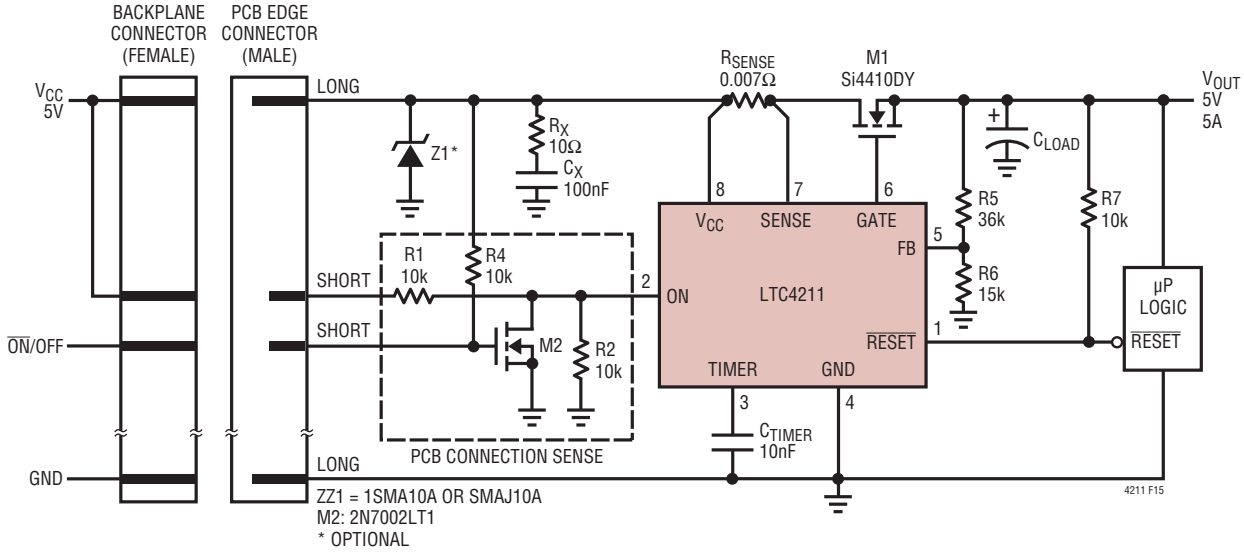

Figure 15. Connection Sense with ON/OFF Control

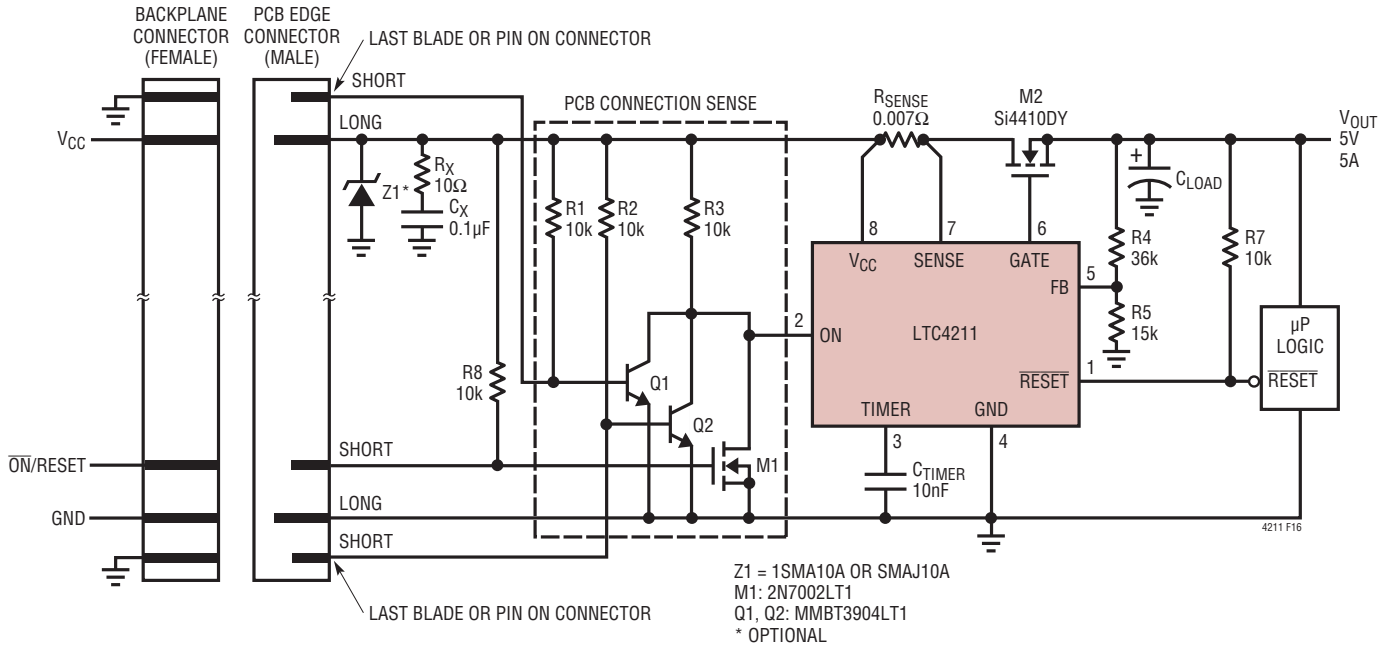

Figure 16. Connection Sense for Rocking the Daughter Board Back and Forth

APPLICATIONS INFORMATION

12V Hot Swap Application

Figure 17 shows a 12V, 3A Hot Swap application circuit. The resistor divider R1/R2 programs the undervoltage lockout externally and allows the system to start up after V_{CC} increases above 9.46V. The resistor divider R3/R4 monitors V_{OUT} and signals the $\overline{RESET}$ pin when V_{OUT} goes above 10.54V. Transient voltage suppressor Z1 and snubber network (C_X, R_X) are highly recommended to protect the 12V applications system from ringing and voltage spikes. R_G is recommended for V_{CC} > 10V and it can minimize high frequency parasitic oscillations in the power MOSFET.

AUTORETRY AFTER A FAULT

To configure the LTC4211 to automatically retry after a fault condition, the $\overline{FAULT}$ and ON pins can be connected to a pull-up resistor (R_{AUTO}) to the supply, as shown in Figure 18. In this case, the autoretry circuitry will attempt to restart the LTC4211 with a 50% duty cycle, as shown in the timing diagram of Figure 19. To prevent overheating the external MOSFET and other components during the autoretry sequence, adding a capacitor (C_{AUTO}) to the circuit introduces an RC time constant (t_{OFF}) that adjusts the autoretry duty cycle. Equation 14 gives the autoretry duty cycle, modified by this external time constant:

$$\text{Autoretry Duty Cycle} \approx \frac{t_{TIMER}}{t_{OFF} + 2 \bullet t_{TIMER}} \bullet 100\% \quad (14)$$

where t_{TIMER} = LTC4211 system timing(see TIMER function) and t_{OFF} is a time needed to charge capacitor C_{AUTO} from 0V to the ON pin threshold (1.316V).

In Figure 18 with R_{AUTO} = 1M, the external RC time constant is set at 1 second, the t_{TIMER} delay equals 6.2ms and the autoretry duty cycle drops from 50% to 2.5%.

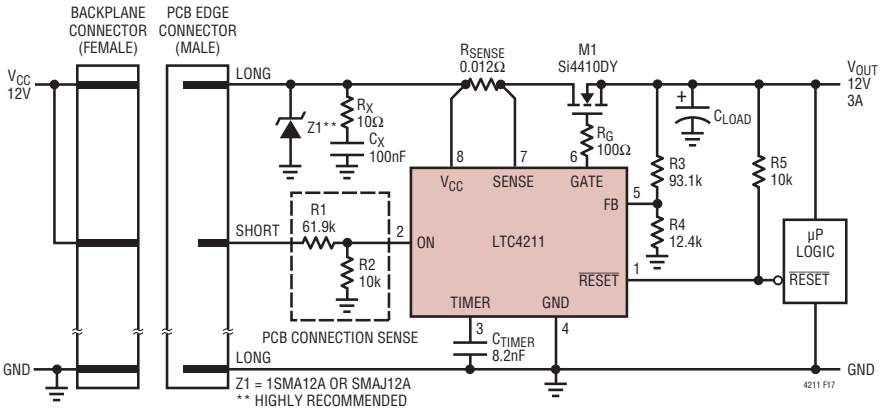

Figure 17. 12V Hot Swap Application

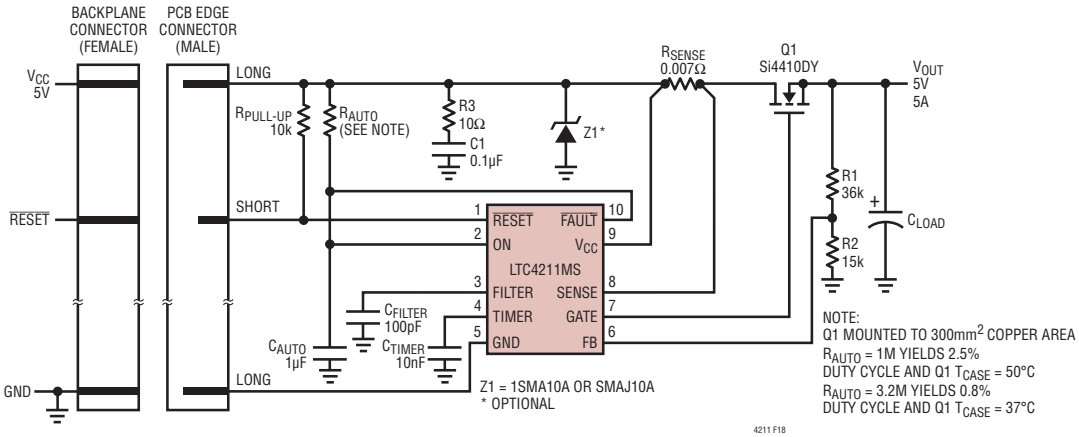

Figure 18. LTC4211MS Autoretry Application

APPLICATIONS INFORMATION

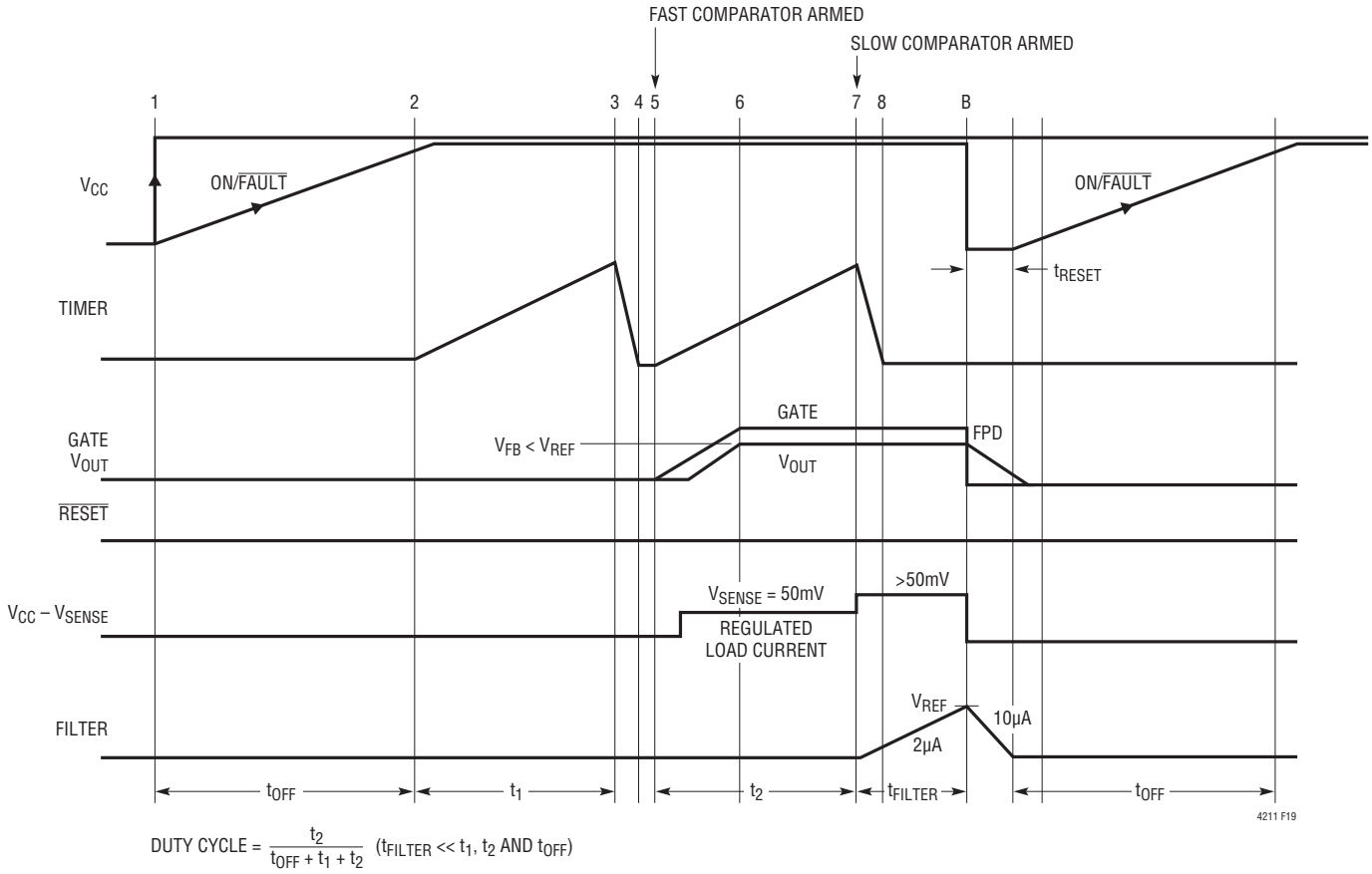

Figure 19. Autoretry Timing

To increase the RC delay, the user may either increase C_{AUTO} or R_{AUTO}. However, increasing C_{AUTO} > 2µF will actually limit the RC delay due to the reset sink-current capability of the $\overline{FAULT}$ pin. Therefore, in order to increase the RC delay, it is more effective to either increase R_{AUTO} or to put a bleed resistor in parallel with C_{AUTO} to GND. For example, increasing R_{AUTO} in Figure 18 from 1M to 3.2M decreases the duty cycle to 0.8%.

HOT SWAPPING TWO SUPPLIES

Using two external pass transistors, the LTC4211 can switch two supply voltages. In some cases, it is necessary to bring up the dominant supply first during power-up but ramp them down together during the power-down phase. The circuit in Figure 20 shows how to program two different delays for the pass transistors. The 5V supply is powered up first. R1 and C3 are used to set the rise and fall times on the 5V supply. Next, the 3.3V supply ramps up with 20ms delay set by R6 and C2. On the falling edge, both supplies ramp down together because D1 and D2 bypass R1 and R6.

OVERVOLTAGE TRANSIENT PROTECTION

Good engineering practice calls for bypassing the supply rail of any analog circuit. Bypass capacitors are often placed at the supply connection of every active device, in addition to one or more large value bulk bypass capacitors per supply rail. If power is connected abruptly, the large bypass capacitors slow the rate of rise of the supply voltage and heavily damp any parasitic resonance of lead or PC track inductance working against the supply bypass capacitors.

The opposite is true for LTC4211 Hot Swap circuits mounted on plug-in cards. In most cases, there is no supply bypass capacitor present on the powered supply voltage side of the MOSFET switch. An abrupt connection, produced by

APPLICATIONS INFORMATION

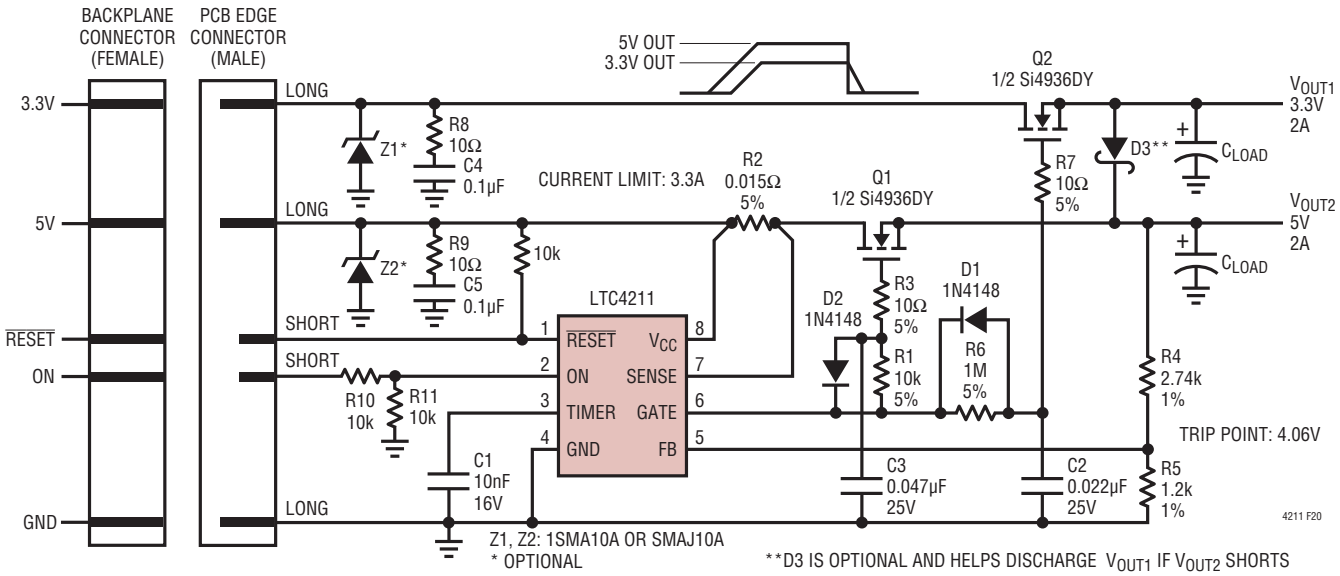

Figure 20. Switching 5V and 3.3V

inserting the board into a backplane connector, results in a fast rising edge applied on the supply line of the LTC4211.

Since there is no bulk capacitance to damp the parasitic track inductance, supply voltage transients excite parasitic resonant circuits formed by the power MOSFET capacitance and the combined parasitic inductance from the wiring harness, the backplane and the circuit board traces.

In these applications, there are two methods that should be applied together for eliminating these supply voltage transients: using transient voltage suppressor to clip the transient to a safe level and snubber networks. Snubber networks are series RC networks whose time constants are experimentally determined based on the board's parasitic resonance circuits. As a starting point, the capacitors in these networks are chosen to be 10× to 100× the power MOSFET's C_{OSS} under bias. The series resistor is a value determined experimentally and ranges from 1Ω to 50Ω, depending on the parasitic resonance circuit. For applications with supply voltages of 12V or higher the ringing and overshoot during hot-swapping or when the output is short-circuited can easily exceed the absolute maximum specification of the LTC4211. To reduce the danger, transient voltage suppressors and snubber networks are highly recommended. For applications with lower supply voltages such as 5V, usually a snubber is adequate to reduce the supply ringing, although a transient voltage suppressor may be required for inductive and high current applications. Note that in all LTC4211 5V applications schematics, transient suppressor and snubber networks have been added for protection. The transient suppressor is optional and a simple short-circuit test can be performed to determine if it is necessary. These protection networks should be mounted very close to the LTC4211's supply input rail using short lead lengths to minimize lead inductance. This is shown in Figure 21, and a recommended layout of the transient protection devices around the LTC4211 is shown in Figure 22.

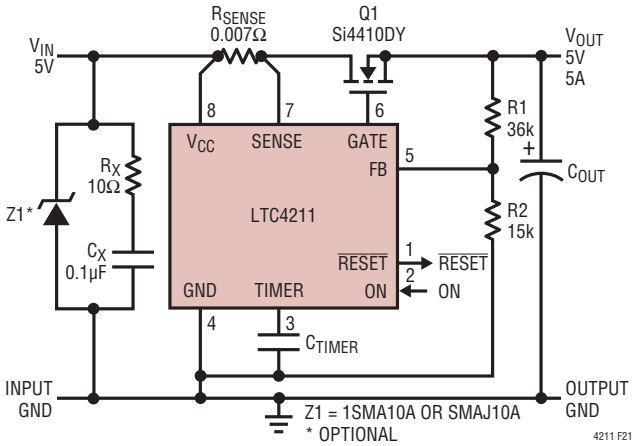

Figure 21. Placing Transient Protection Devices Close to the LTC4211's Input Rail

APPLICATIONS INFORMATION

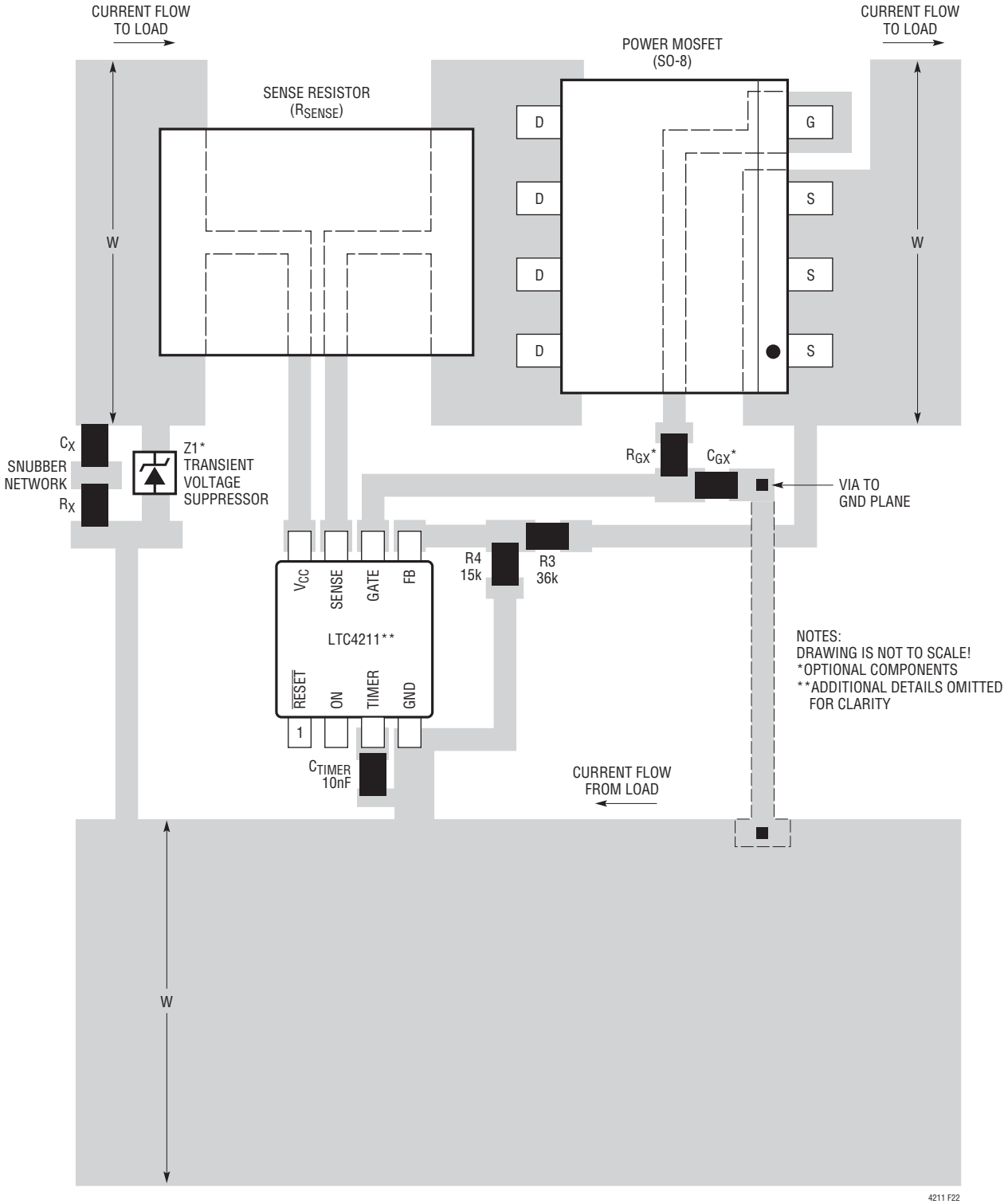

Figure 22. Recommended Layout for LTC4211 Protection Devices, R_{SENSE}, Power MOSFET and Feedback Network

APPLICATIONS INFORMATION

SUPPLY OVERVOLTAGE DETECTION/ PROTECTION USING FILTER PIN

In addition to using external protection devices around the LTC4211 for large scale transient protection, low power Zener diodes can be used with the LTC4211's FILTER pin to act as a supply overvoltage detection/protection circuit on either the high side (input) or low side (output) of the external pass transistor. Recall that internal control circuitry keeps the LTC4211 GATE voltage from ramping up if V_{FILTER} > 1.156V, or when an external fault condition (V_{FILTER} > 1.236V) causes $\overline{FAULT}$ to be asserted low.

High Side (Input) Overvoltage Protection

As shown in Figure 23, a low power Zener diode can be used to sense an overvoltage condition on the input (high) side of the main 5V supply. In this example, a low bias current 1N4691 Zener diode is chosen to protect the system. Here, the Zener diode is connected from V_{CC} to the LTC4211's FILTER pin (Pin 3 MS). If the input voltage to the system is greater than 6.8V during start-up, the voltage on the FILTER pin is pulled higher than its 1.156V threshold. As a result, the GATE pin is not allowed to ramp and the second timing cycle will not commence until the supply overvoltage condition is removed. Should the supply overvoltage condition occur during normal operation, internal control logic would trip the electronic circuit breaker and the GATE would be pulled to ground, shutting OFF the external pass transistor. If a lower supply overvoltage threshold is desired, use a Zener diode with a smaller breakdown voltage.

A timing diagram for illustrating LTC4211 operation under a high side overvoltage condition is shown in Figure 24. The start-up sequence in this case (between Time Points 1 and 2) is identical to any other start-up sequence under normal operating conditions. At Time Point 2A, the input supply voltage causes the Zener diode to conduct thereby forcing V_{FILTER} > 1.156V. At Time Point 3, $\overline{FAULT}$ is asserted low and the TIMER pin voltage ramps down. At Time Point 4, the LTC4211 checks if V_{FILTER} < 1.156V. $\overline{FAULT}$ is asserted low (but not latched) to indicate a start-up failure. The start-up sequence only resumes with the second timing cycle at Time Point 5 when the input overvoltage condition is removed. At this point in time, the GATE pin voltage is allowed to ramp up, $\overline{FAULT}$ is pulled to logic high and the circuit breaker is armed. At any time after Time Point 5, should a supply overvoltage condition develop (V_{FILTER} > 1.236V), the electronic circuit breaker will trip, the GATE will be pulled low to turn off the external MOSFET and $\overline{FAULT}$ will be asserted low and latched. This sequence is shown in detail at Time Point B.

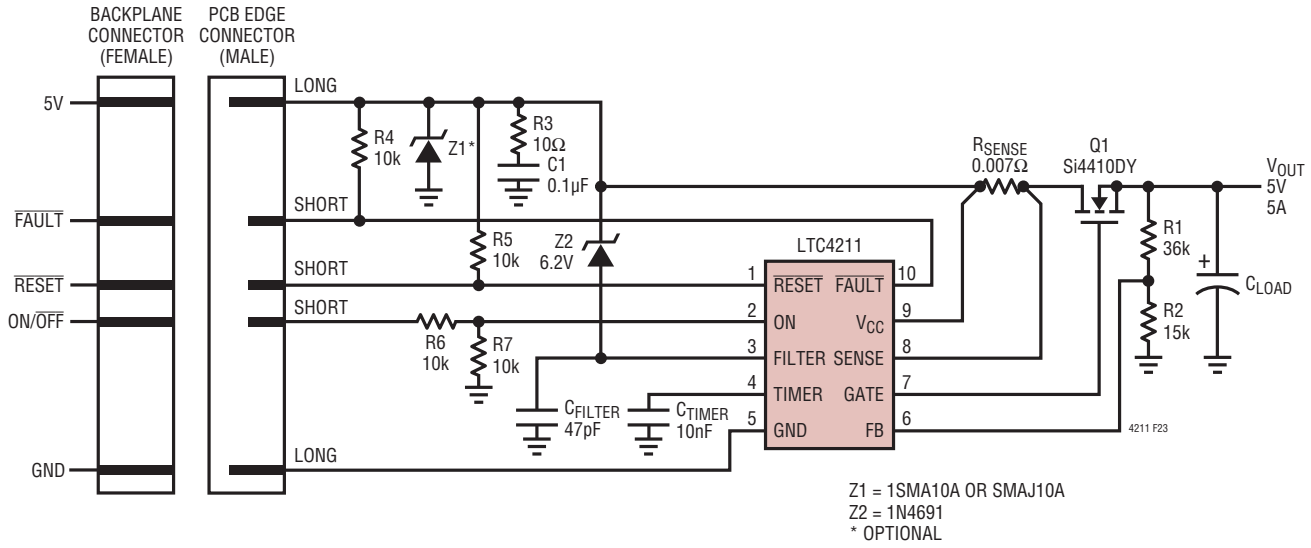

Figure 23. LTC4211MS High Side Overvoltage Protection Implementation

APPLICATIONS INFORMATION

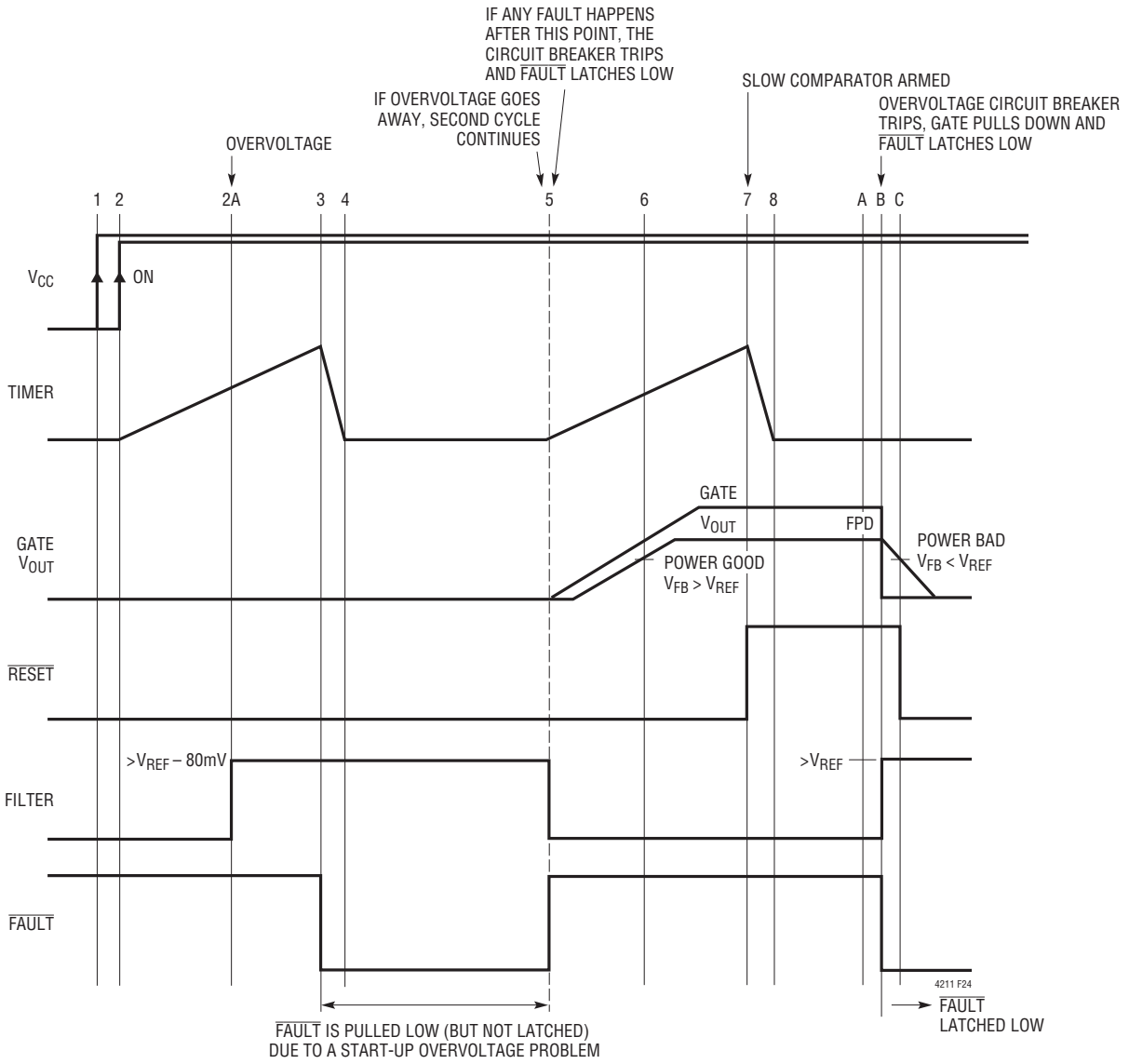

Figure 24. High Side Overvoltage Protection

Low Side (Output) Overvoltage Protection

A Zener diode can be used in a similar fashion to detect/protect the system against a supply overvoltage condition on the load (or low) side of the pass transistor. In this case, the Zener diode is connected from the load to the LTC4211's FILTER pin, as shown in Figure 25. An additional diode, D1, prevents the FILTER pin from pulling low during an output short-circuit. Figure 26 illustrates the timing diagram for a low side output overvoltage condition. In this example, V_{CC} starts up in an overvoltage condition but the LTC4211 can only sense the overvoltage supply condition at Time Point 6 when the GATE pin has ramped up. At Time Point 6, V_{FILTER} is greater than 1.236V, the circuit breaker is tripped, the GATE pin voltage is pulled to ground and $\overline{FAULT}$ is asserted low and latched.

APPLICATIONS INFORMATION

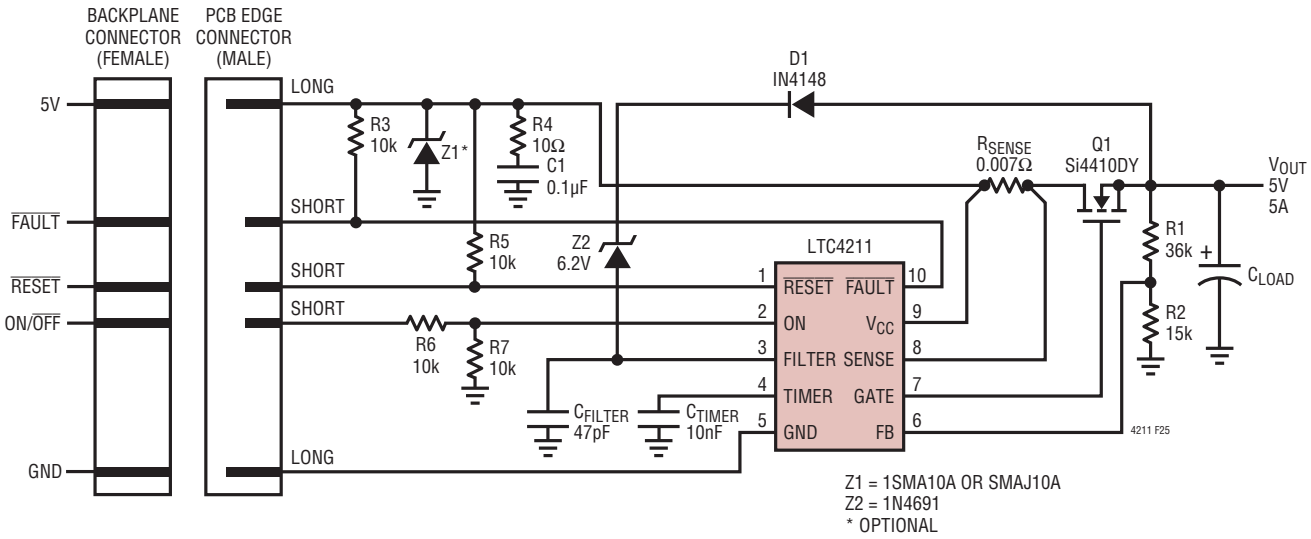

Figure 25. LTC4211MS Low Side Overvoltage Protection Implementation

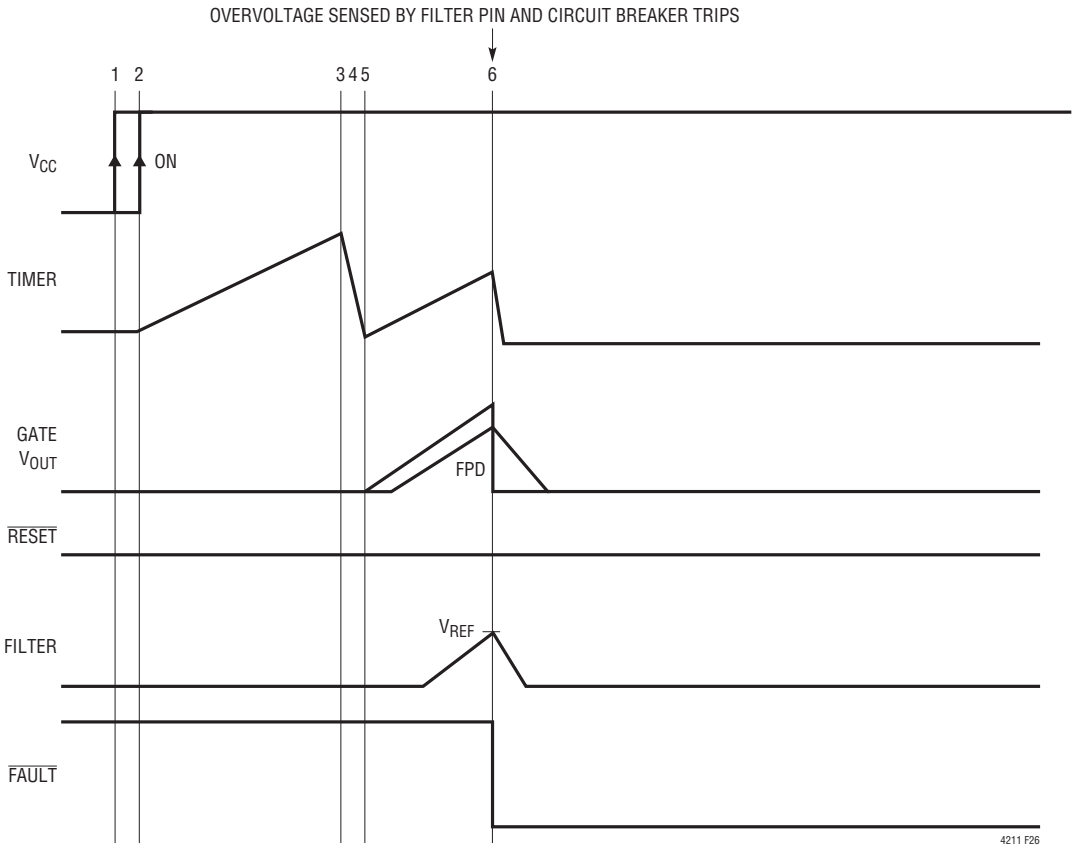

Figure 26. Low Side Overvoltage Protection

APPLICATIONS INFORMATION

In either case, the LTC4211 can be configured to automatically initiate a start-up sequence. Please refer to the section on AutoRetry After a Fault for additional information.

PCB Layout Considerations

For proper operation of the LTC4211's circuit breaker function, a 4-wire Kelvin connection to the sense resistors is highly recommended. A recommended PCB layout for the sense resistor, the power MOSFET and the GATE drive components around the LTC4211 is illustrated in Figure 22. In Hot Swap applications where load currents can reach 10A or more, narrow PCB tracks exhibit more resistance than wider tracks and operate at more elevated temperatures. Since the sheet resistance of 1 ounce copper foil is approximately 0.54mΩ/square, track resistances add up quickly in high current applications. Thus, to keep PCB track resistance and temperature rise to a minimum, PCB track width must be appropriately sized. Consult Appendix A of LTC Application Note 69 for details on sizing and calculating trace resistances as a function of copper thickness.

In the majority of applications, it will be necessary to use plated-through vias to make circuit connections from component layers to power and ground layers internal to the PC board. For 1 ounce copper foil plating, a good starting point is 1A of DC current per via, making sure the via is properly dimensioned so that solder completely fills any void. For other plating thicknesses, check with your PCB fabrication facility.

APPENDIX

Table 4 lists some current sense resistors that can be used with the circuit breaker. Table 5 lists some power MOSFETs that are available. Table 6 lists the web sites of several manufacturers. Since this information is subject to change, please verify the part numbers with the manufacturer.

Table 4. Sense Resistor Selection Guide

CURRENT LIMIT VALUE	PART NUMBER	DESCRIPTION	MANUFACTURER
1A	LR120601R050	0.05Ω 0.5W 1% Resistor	IRC-TT
2A	LR120601R025	0.025Ω 0.5W 1% Resistor	IRC-TT
2.5A	LR120601R020	0.02Ω 0.5W 1% Resistor	IRC-TT
3.3A	WSL2512R015F	0.015Ω 1W 1% Resistor	Vishay-Dale
5A	LR251201R010F	0.01Ω 1.5W 1% Resistor	IRC-TT
10A	WSR2R005F	0.005Ω 2W 1% Resistor	Vishay-Dale

Table 5. N-Channel Selection Guide

CURRENT LEVEL (A)	PART NUMBER	DESCRIPTION	MANUFACTURER
0 to 2	MMDF3N02HD	Dual N-Channel SO-8 $R_{DS(ON)}$ = 0.1Ω, C_{ISS} = 455pF	ON Semiconductor
2 to 5	MMSF5N02HD	Single N-Channel SO-8 $R_{DS(ON)}$ = 0.025Ω, C_{ISS} = 1130pF	ON Semiconductor
5 to 10	MTB50N06V	Single N-Channel DD Pak $R_{DS(ON)}$ = 0.028Ω, C_{ISS} = 1570pF	ON Semiconductor
10 to 20	MTB75N05HD	Single N-Channel DD Pak $R_{DS(ON)}$ = 0.0095Ω, C_{ISS} = 2600pF	ON Semiconductor

Table 6. Manufacturers' Web Sites

MANUFACTURER	WEB SITE
TEMIC Semiconductor	www.temic.com
International Rectifier	www.irf.com
ON Semiconductor	www.onsemi.com
Harris Semiconductor	www.semi.harris.com
IRC-TT	www.irctt.com
Vishay-Dale	www.vishay.com
Vishay-Siliconix	www.vishay.com
Diodes, Inc.	www.diodes.com

PACKAGE DESCRIPTION

Please refer to http://www.linear.com/designtools/packaging/ for the most recent package drawings.

MS8 Package
8-Lead Plastic MSOP
(Reference LTC DWG # 05-08-1660 Rev F)

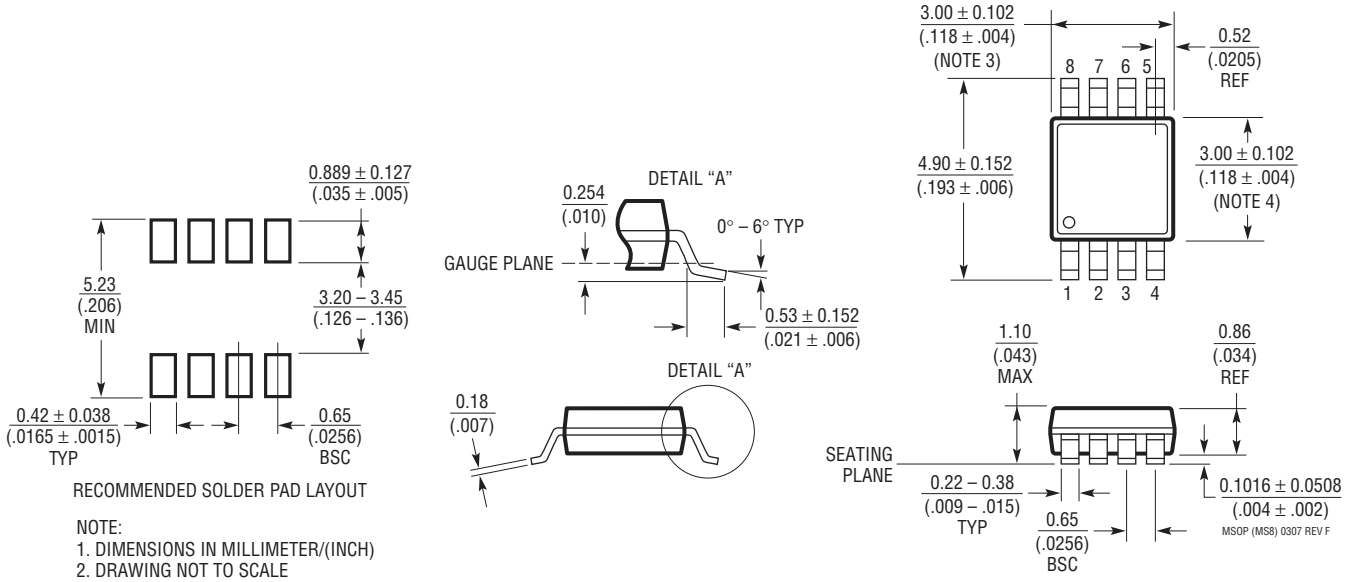

NOTE:
1. DIMENSIONS IN MILLIMETER/(INCH)
2. DRAWING NOT TO SCALE
3. DIMENSION DOES NOT INCLUDE MOLD FLASH, PROTRUSIONS OR GATE BURRS.
   MOLD FLASH, PROTRUSIONS OR GATE BURRS SHALL NOT EXCEED 0.152mm (.006") PER SIDE
4. DIMENSION DOES NOT INCLUDE INTERLEAD FLASH OR PROTRUSIONS.
   INTERLEAD FLASH OR PROTRUSIONS SHALL NOT EXCEED 0.152mm (.006") PER SIDE
5. LEAD COPLANARITY (BOTTOM OF LEADS AFTER FORMING) SHALL BE 0.102mm (.004") MAX

PACKAGE DESCRIPTION

Please refer to http://www.linear.com/designtools/packaging/ for the most recent package drawings.

MS Package
10-Lead Plastic MSOP
(Reference LTC DWG # 05-08-1661 Rev E)

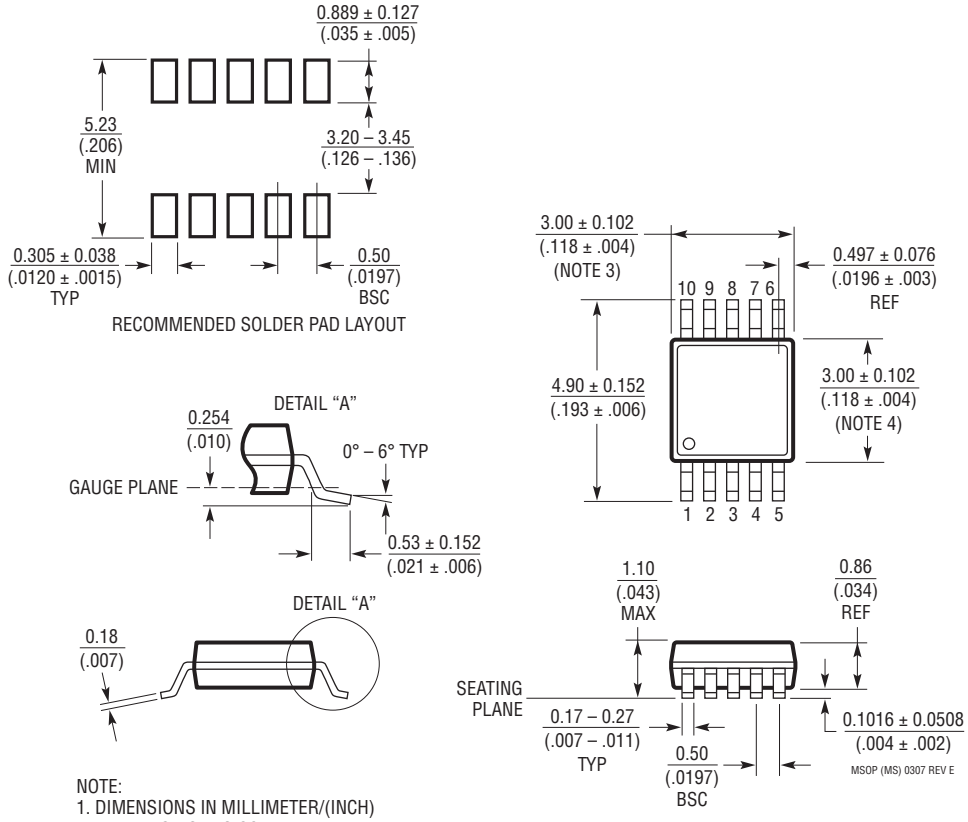

NOTE:
1. DIMENSIONS IN MILLIMETER/(INCH)
2. DRAWING NOT TO SCALE
3. DIMENSION DOES NOT INCLUDE MOLD FLASH, PROTRUSIONS OR GATE BURRS.
   MOLD FLASH, PROTRUSIONS OR GATE BURRS SHALL NOT EXCEED 0.152mm (.006") PER SIDE
4. DIMENSION DOES NOT INCLUDE INTERLEAD FLASH OR PROTRUSIONS.
   INTERLEAD FLASH OR PROTRUSIONS SHALL NOT EXCEED 0.152mm (.006") PER SIDE
5. LEAD COPLANARITY (BOTTOM OF LEADS AFTER FORMING) SHALL BE 0.102mm (.004") MAX

PACKAGE DESCRIPTION

Please refer to http://www.linear.com/designtools/packaging/ for the most recent package drawings.

S8 Package
8-Lead Plastic Small Outline (Narrow .150 Inch)
(Reference LTC DWG # 05-08-1610 Rev G)

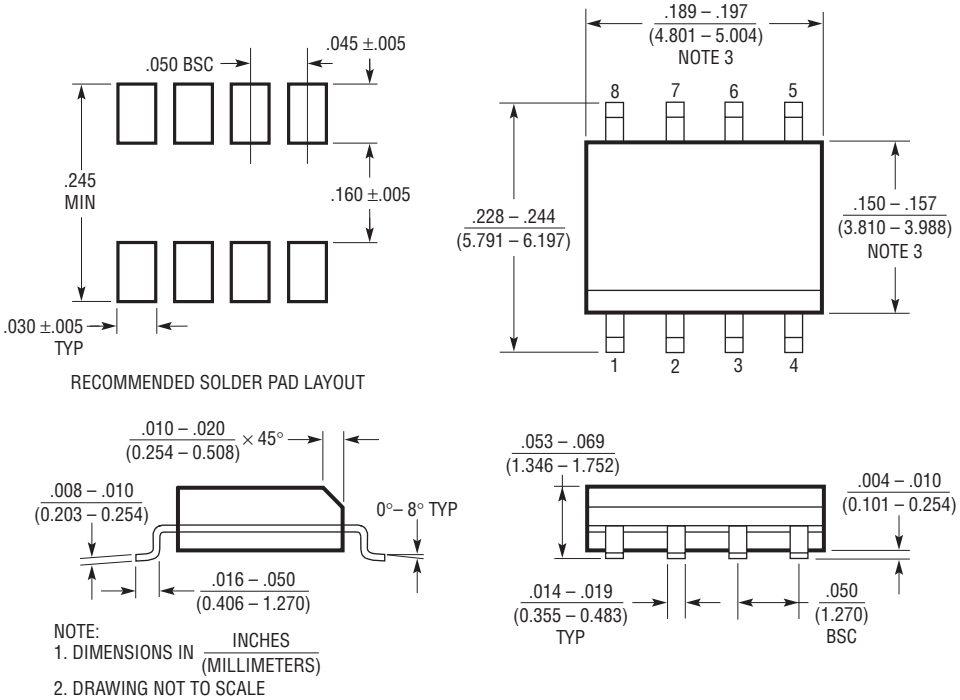

NOTE:
1. DIMENSIONS IN $\frac{\text{INCHES}}{(\text{MILLIMETERS})}$
2. DRAWING NOT TO SCALE
3. THESE DIMENSIONS DO NOT INCLUDE MOLD FLASH OR PROTRUSIONS.
   MOLD FLASH OR PROTRUSIONS SHALL NOT EXCEED .006" (0.15mm)
4. PIN 1 CAN BE BEVEL EDGE OR A DIMPLE

SO8 REV G 0212

REVISION HISTORY (Revision history begins at Rev B)

REV	DATE	DESCRIPTION	PAGE NUMBER
B	03/12	Updated Pin description information	10, 11
		Updated Figure 2 and supporting text	13
		Moved Figure 7 and supporting text to page 16 and renumbered to Figure 6	16
		Updated text under Second Timing (Soft-Start) Cycle	16
		Replaced C_{GX} with C_{GATE} in Figure 6	16
		Revised Figure 26 and supporting Low Side (Output) Overvoltage Protection text	32, 33

Information furnished by Linear Technology Corporation is believed to be accurate and reliable. However, no responsibility is assumed for its use. Linear Technology Corporation makes no representation that the interconnection of its circuits as described herein will not infringe on existing patent rights.

TYPICAL APPLICATION

LOW COST OVERVOLTAGE PROTECTION

There is an alternative method to implementing the overvoltage protection using a resistor divider at the FILTER pin (see Figures 27 and 28). In this implementation, the SLOW COMP is NULL in Normal Mode. Only the FAST COMP circuit breaker is available and the current limit level is 150mV/R_{SENSE}. During the soft-cycle, the inrush current servo loop is at 50mV/R_{SENSE}. So, the heavy load should only turn on at/after the end of second cycle where the $\overline{RESET}$ pin goes high.

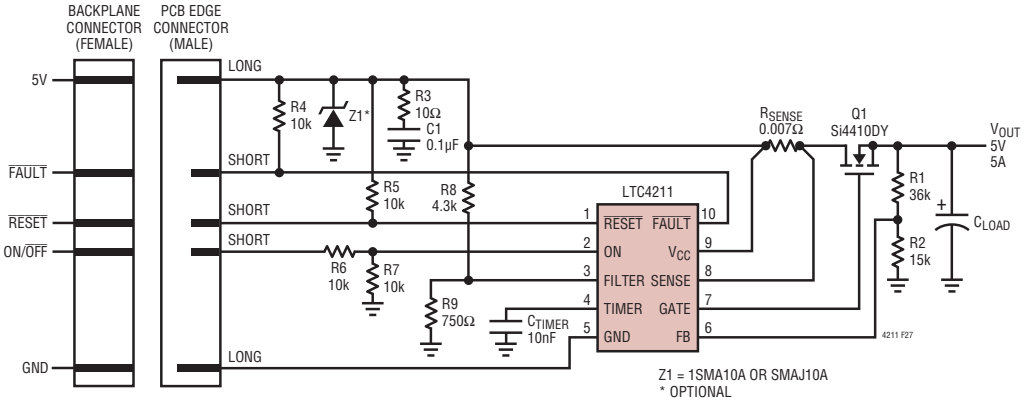

Figure 27. LTC4211MS High Side Overvoltage Protection Implementation (In Normal Mode, SLOW COMP Is Disabled. In Soft-Start Cycle, $I_{SOFTSTART}$ Is Still 50mV/R_{SENSE})

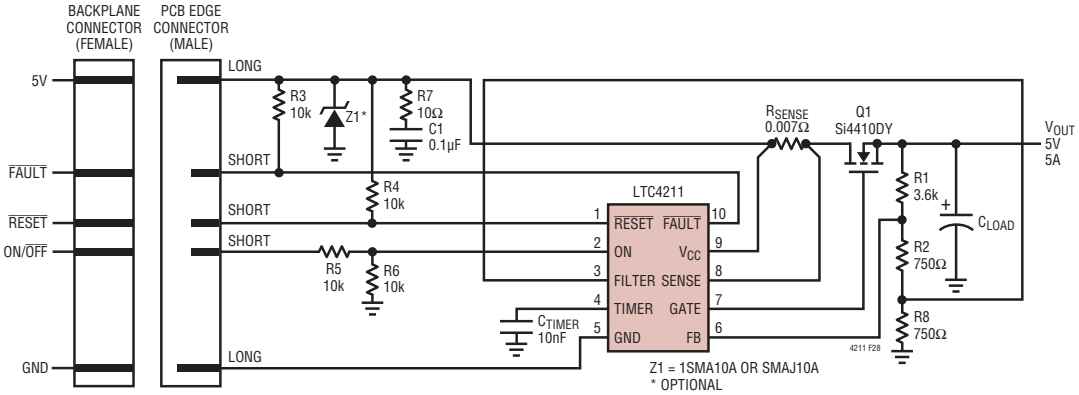

Figure 28. LTC4211MS Low Side Overvoltage Protection Implementation (In Normal Mode, SLOW COMP Is Disabled. In Soft-Start Cycle, $I_{SOFTSTART}$ Is Still 50mV/R_{SENSE})

RELATED PARTS

PART NUMBER	DESCRIPTION	COMMENTS
LTC1421	Two Channels, Hot Swap Controller	24-Pin, Operates from 3V to 12V and Supports –12V
LTC1422	Single Channel, Hot Swap Controller	8-Pin, Operates from 2.7V to 12V
LT1640AL/LT1640AH	Negative Voltage Hot Swap Controller	8-Pin, Operates from –10V to –80V
LT1641-1/LT1641-2	Positive Voltage Hot Swap Controller	8-Pin, Operates from 9V to 80V, Latch-Off/Auto Retry
LTC1642	Single Channel, Hot Swap Controller	16-Pin, Overvoltage Protection to 33V
LTC1644	PCI Hot Swap Controller	16-Pin, 3.3V, 5V and ±12V, 1V Precharge, PCI Reset Logic
LTC1647	Dual Channel, Hot Swap Controller	8-Pin, 16-Pin, Operates from 2.7V to 16.5V
LTC4230	Triple Hot Swap Controller with Multifunction Current Control	Operates from 1.7V to 16.5V

Linear Technology Corporation
1630 McCarthy Blvd., Milpitas, CA 95035-7417
(408) 432-1900 • FAX: (408) 434-0507 • www.linear.com

LT 0312 REV B • PRINTED IN USA

© LINEAR TECHNOLOGY CORPORATION 2006