2.5V Reference

FEATURES

- Maximum Initial Tolerance: 0.2%
- *Guaranteed* Temperature Stability
- Maximum 0.6Ω Dynamic Impedance
- Wide Operating Current Range
- Directly Interchangeable with LM136 for Improved Performance
- No Adjustments Needed for Minimum Temperature Coefficient
- Available in 8-Lead SO and MSOP Packages and 3-Lead TO-92 Package

APPLICATIONS

- Reference for 5V Systems
- 8-Bit A/D and D/A Reference
- Digital Voltmeters
- Current Loop Measurement and Control Systems
- Power Supply Monitor

DESCRIPTION

The LT®1009 is a precision trimmed 2.5V shunt regulator diode featuring a maximum initial tolerance of only ±5mV. The low dynamic impedance and wide operating current range enhances its versatility. The 0.2% reference tolerance is achieved by on-chip trimming which not only minimizes the initial voltage tolerance but also minimizes the temperature drift.

Even though no adjustments are needed with the LT1009, a third terminal allows the reference voltage to be adjusted ±5% to calibrate out system errors. In many applications, the LT1009 can be used as a pin-to-pin replacement of the LM136 and the external trim network eliminated.

For a lower drift 2.5V reference, see the LT1019 data sheet.

LT, LT, LTC and LTM are registered trademarks of Linear Technology Corporation.
All other trademarks are the property of their respective owners.

TYPICAL APPLICATION

2.5V Reference

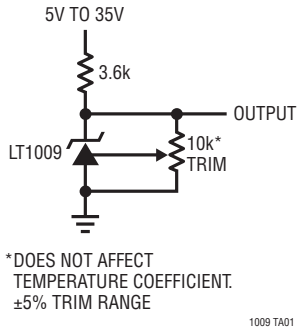

Output Voltage

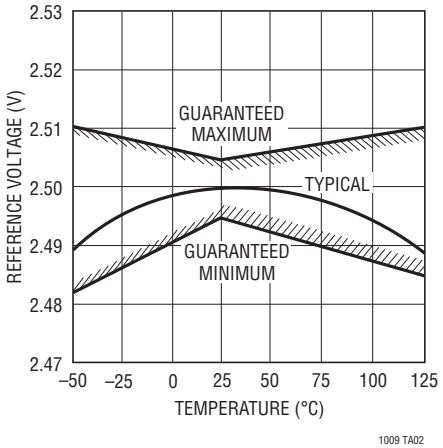

ABSOLUTE MAXIMUM RATINGS (Note 1)

Reverse Current 20mA
Forward Current 10mA
Storage Temperature Range ..... –65°C to 150°C
Lead Temperature (Soldering, 10 sec) ..... 300°C

Operating Temperature Range
LT1009/LT1009C ..... 0°C to 70°C
LT1009I ..... –40°C to 85°C
LT1009M **(OBSOLETE)** ..... –55°C to 125°C

PIN CONFIGURATION

BOTTOM VIEW

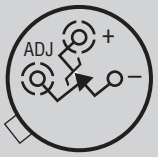

H PACKAGE
3-LEAD TO-46 METAL CAN

T_{JMAX} = 150°C, θ_{JA} = 440°C/W, θ_{JC} = 80°C/W

OBSOLETE PACKAGE
Consider the MS8, S8 or Z Packages for Alternate Source

TOP VIEW

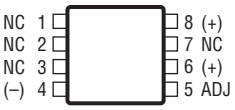

MS8 PACKAGE
8-LEAD PLASTIC MSOP

T_{JMAX} = 150°C, θ_{JA} = 250°C/W

TOP VIEW

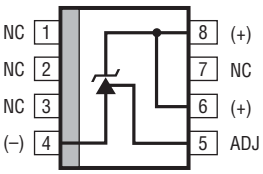

S8 PACKAGE
8-LEAD PLASTIC SO

T_{JMAX} = 150°C, θ_{JA} = 190°C/W

BOTTOM VIEW

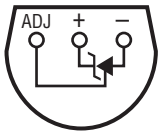

Z PACKAGE
3-LEAD PLASTIC TO-92

T_{JMAX} = 100°C, θ_{JA} = 160°C/W

ORDER INFORMATION

LEAD FREE FINISH	TAPE AND REEL	PART MARKING	PACKAGE DESCRIPTION	TEMPERATURE RANGE
LT1009MH#PBF	LT1009MH#TRPBF		3-Lead TO-46 Metal Can	–55°C to 125°C
LT1009CH#PBF	LT1009CH#TRPBF		3-Lead TO-46 Metal Can	0°C to 70°C
LT1009CMS8#PBF	LT1009CMS8#TRPBF	LTQZ	8-Lead Plastic MSOP	0°C to 70°C
LT1009S8#PBF	LT1009S8#TRPBF	1009	8-Lead Plastic SO	0°C to 70°C
LT1009IS8#PBF	LT1009IS8#TRPBF	1009I	8-Lead Plastic SO	–40°C to 85°C
LT1009CZ#PBF	LT1009CZ#TRPBF		3-Lead Plastic TO-92	0°C to 70°C
LT1009IZ#PBF	LT1009IZ#TRPBF		3-Lead Plastic TO-92	–40°C to 85°C

ORDER INFORMATION

LEAD BASED FINISH	TAPE AND REEL	PART MARKING	PACKAGE DESCRIPTION	TEMPERATURE RANGE
LT1009MH	LT1009MH#TR		3-Lead TO-46 Metal Can	–55°C to 125°C
LT1009CH	LT1009CH#TR		3-Lead TO-46 Metal Can	0°C to 70°C
LT1009CMS8	LT1009CMS8#TR	LTQZ	8-Lead Plastic MSOP	0°C to 70°C
LT1009S8	LT1009S8#TR	1009	8-Lead Plastic SO	0°C to 70°C
LT1009IS8	LT1009IS8#TR	1009I	8-Lead Plastic SO	–40°C to 85°C
LT1009CZ	LT1009CZ#TR		3-Lead Plastic TO-92	0°C to 70°C
LT1009IZ	LT1009IZ#TR		3-Lead Plastic TO-92	–40°C to 85°C

Consult LTC Marketing for parts specified with wider operating temperature ranges.

For more information on lead free part marking, go to: http://www.linear.com/leadfree/
For more information on tape and reel specifications, go to: http://www.linear.com/tapeandreel/

AVAILABLE OPTIONS

TEMPERATURE	ACCURACY (%)	TEMPERATURE COEFFICIENT (ppm/°C)	PACKAGE STYLE			
			TO-46 (H) OBSOLETE	MSOP-8 (MS8)	SO-8 (S8)	TO-92 (Z)
0°C to 70°C	0.20 0.40	25 25	LT1009CH	LT1009CMS8	LT1009S8	LT1009CZ
–40°C to 85°C	0.20 0.40	35 35			LT1009IS8	LT1009IZ
–55°C to 125°C	0.20	35	LT1009MH			

ELECTRICAL CHARACTERISTICS

The ● denotes the specifications which apply over the full operating temperature range, otherwise specifications are at T_A = 25°C.

SYMBOL	PARAMETER	CONDITIONS		LT100M MIN	LT100M TYP	LT100M MAX	LT1009I MIN	LT1009I TYP	LT1009I MAX	LT1009/LT1009C MIN	LT1009/LT1009C TYP	LT1009/LT1009C MAX	UNITS
V_Z	Reverse Breakdown Voltage	T_A = 25°C, I_R = 1mA H, Z Pkg MS, S Pkg		2.495	2.500	2.505	2.495 2.49	2.500 2.50	2.505 2.51	2.495 2.49	2.500 2.50	2.505 2.51	V V
$\frac{\Delta V_Z}{\Delta I_R}$	Reverse Breakdown Change with Current	400µA ≤ I_R ≤ 10mA	 ●		2.6 3.0	6 10		2.6 3.0	10 12		2.6 3.0	10 12	mV mV
r_Z	Reverse Dynamic Impedance	I_R = 1mA	 ●		0.2 0.4	0.6 1.0		0.2 0.4	1.0 1.4		0.2 0.4	1.0 1.4	Ω Ω
	Temperature Stability	T_{MIN} ≤ T_A ≤ T_{MAX}	●			15			15		1.8	4	mV
$\frac{\Delta V_Z}{\Delta Temp}$	Average Temperature Coefficient (Notes 2, 3)	0°C ≤ T_A ≤ 70°C –40°C ≤ T_A ≤ 85°C –55°C ≤ T_A ≤ 125°C			15 25	25 35		15	25 35		15	25	ppm/°C ppm/°C ppm/°C
$\frac{\Delta V_Z}{\Delta Time}$	Long-Term Stability	T_A = 25°C ±0.1°C, I_R = 1mA			20			20			20		ppm/kHr

Note 1: Stresses beyond those listed under Absolute Maximum Ratings may cause permanent damage to the device. Exposure to any Absolute Maximum Rating condition for extended periods may affect device reliability and lifetime.

Note 2: Guaranteed by Design.

Note 3: Average temperature coefficient is defined as the total voltage change divided by the specified temperature change.

TYPICAL PERFORMANCE CHARACTERISTICS

Reverse Characteristics

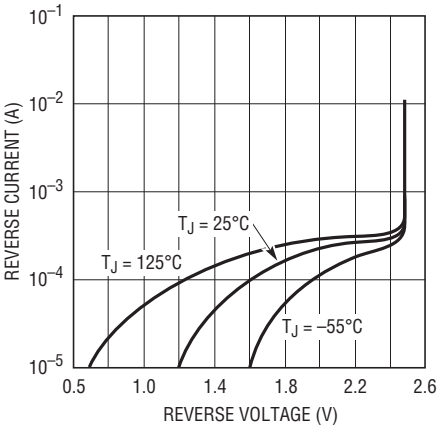

Forward Characteristics

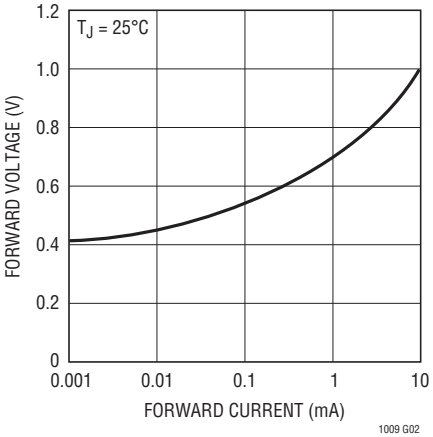

Reverse Voltage Change

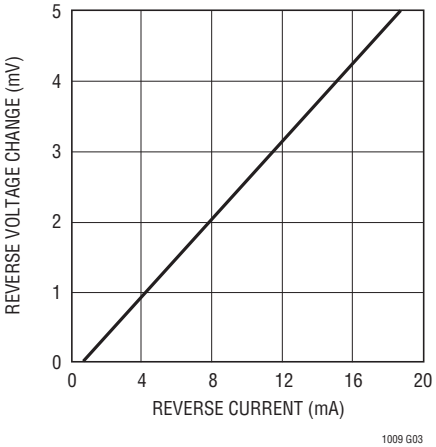

Dynamic Impedance

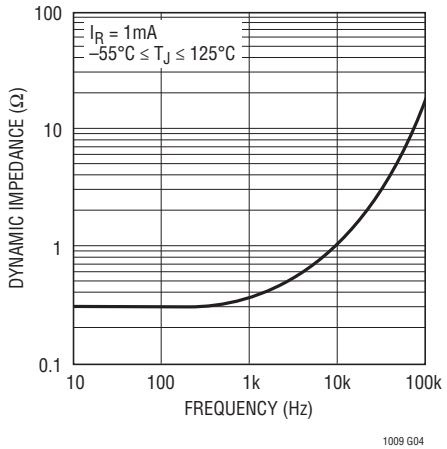

Output Noise Voltage

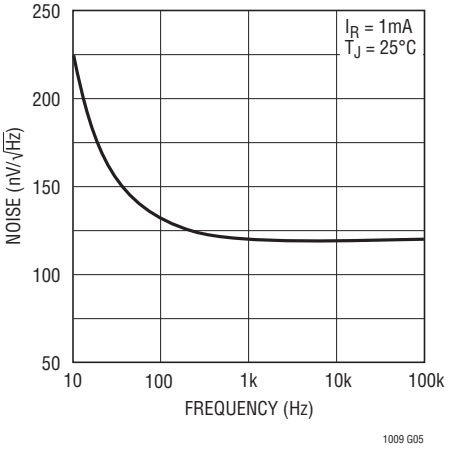

Response Time

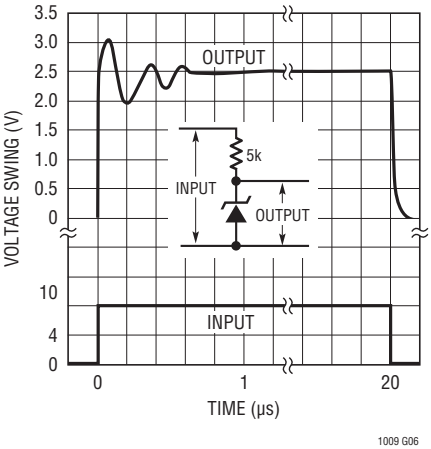

SCHEMATIC DIAGRAM

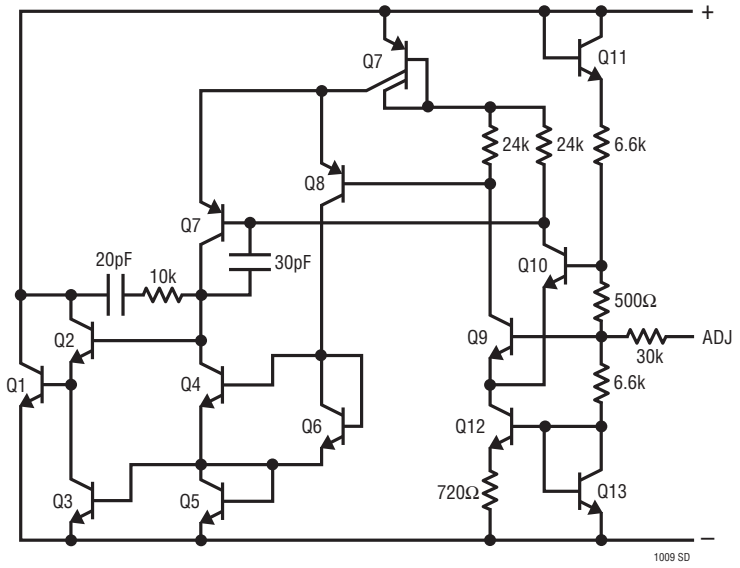

TYPICAL APPLICATIONS

Wide Supply Range, Adjustable Reference

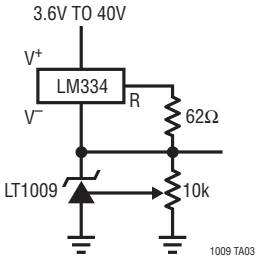

Low Temperature Coefficient Power Regulator

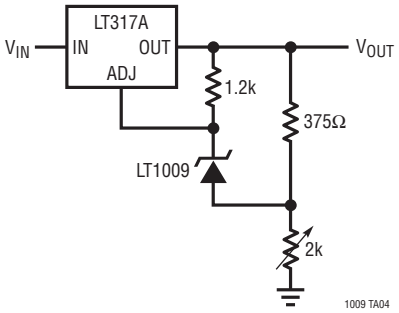

Switchable ±1.25V Bipolar Reference

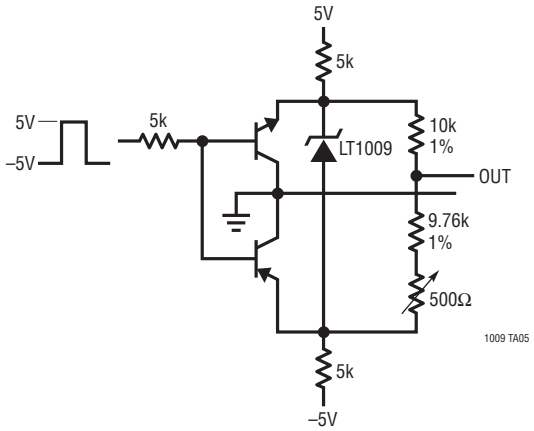

PACKAGE DESCRIPTION

H Package
2-Lead and 3-Lead TO-46 Metal Can
(Reference LTC DWG # 05-08-1340)

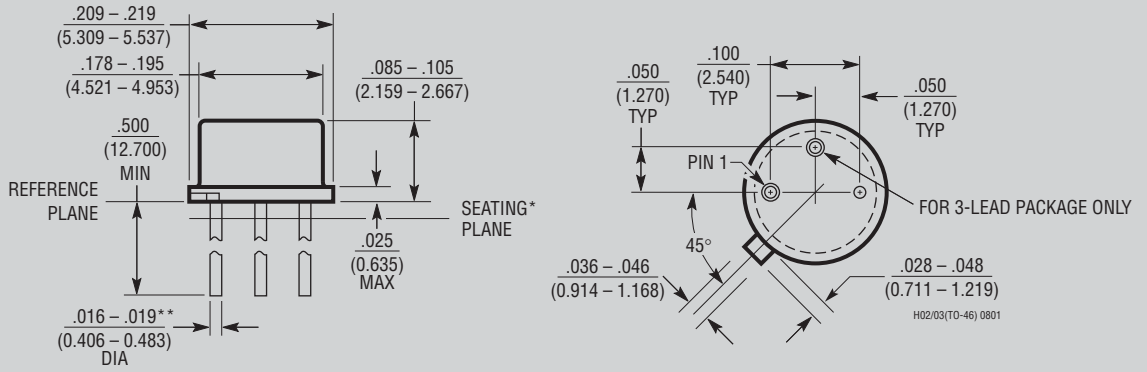

*LEAD DIAMETER IS UNCONTROLLED BETWEEN THE REFERENCE PLANE AND .050" BELOW THE REFERENCE PLANE

**FOR SOLDER DIP LEAD FINISH, LEAD DIAMETER IS $\frac{.016 – .024}{(0.406 – 0.610)}$

OBSOLETE PACKAGE

MS8 Package
8-Lead Plastic MSOP
(Reference LTC DWG # 05-08-1660)

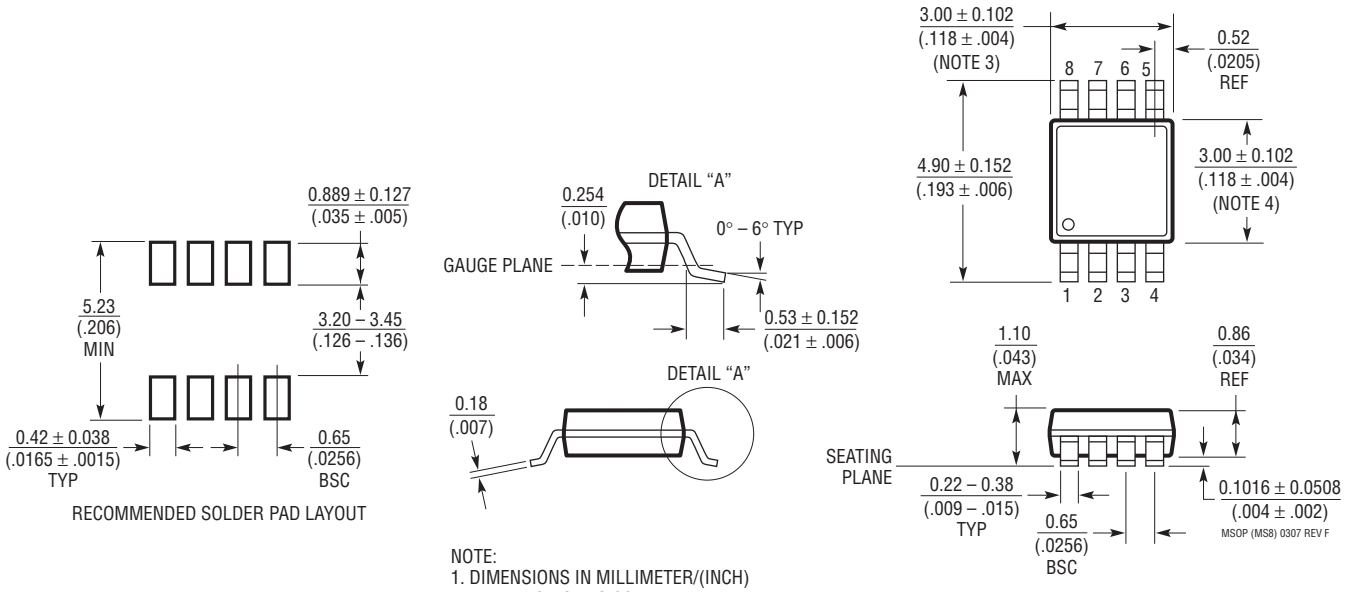

NOTE:
1. DIMENSIONS IN MILLIMETER/(INCH)
2. DRAWING NOT TO SCALE
3. DIMENSION DOES NOT INCLUDE MOLD FLASH, PROTRUSIONS OR GATE BURRS.
   MOLD FLASH, PROTRUSIONS OR GATE BURRS SHALL NOT EXCEED 0.152mm (.006") PER SIDE
4. DIMENSION DOES NOT INCLUDE INTERLEAD FLASH OR PROTRUSIONS.
   INTERLEAD FLASH OR PROTRUSIONS SHALL NOT EXCEED 0.152mm (.006") PER SIDE
5. LEAD COPLANARITY (BOTTOM OF LEADS AFTER FORMING) SHALL BE 0.102mm (.004") MAX

PACKAGE DESCRIPTION

S8 Package
8-Lead Plastic Small Outline (Narrow .150 Inch)
(Reference LTC DWG # 05-08-1610)

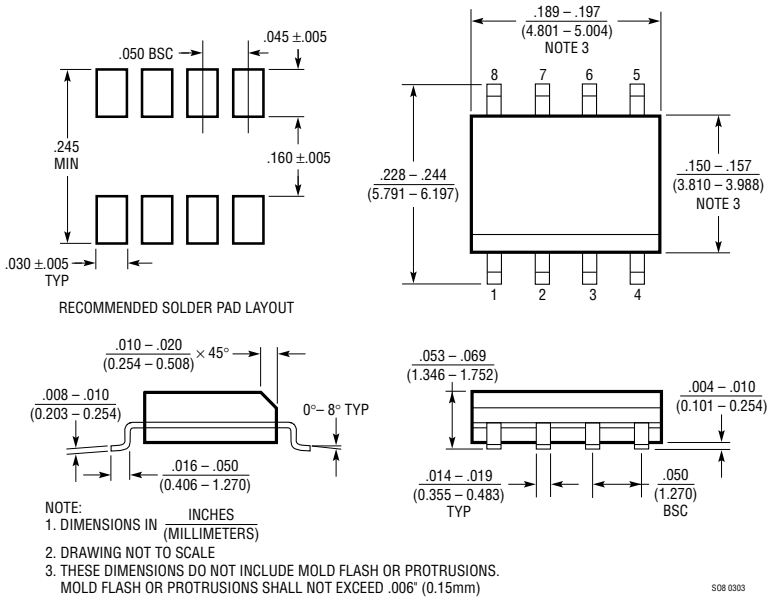

NOTE:
1. DIMENSIONS IN INCHES (MILLIMETERS)
2. DRAWING NOT TO SCALE
3. THESE DIMENSIONS DO NOT INCLUDE MOLD FLASH OR PROTRUSIONS.
MOLD FLASH OR PROTRUSIONS SHALL NOT EXCEED .006" (0.15mm)

S08 0303

Z Package
3-Lead Plastic TO-92 (Similar to TO-226)
(Reference LTC DWG # 05-08-1410)

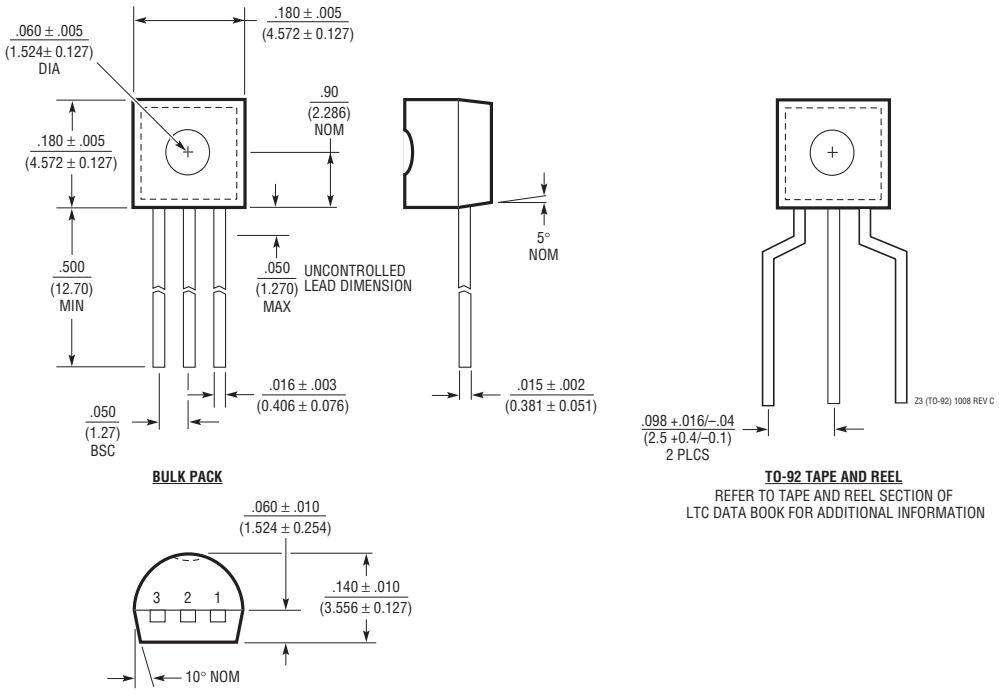

TO-92 TAPE AND REEL
REFER TO TAPE AND REEL SECTION OF
LTC DATA BOOK FOR ADDITIONAL INFORMATION

Information furnished by Linear Technology Corporation is believed to be accurate and reliable. However, no responsibility is assumed for its use. Linear Technology Corporation makes no representation that the interconnection of its circuits as described herein will not infringe on existing patent rights.

TYPICAL APPLICATION

Low Noise 2.5V Buffered Reference

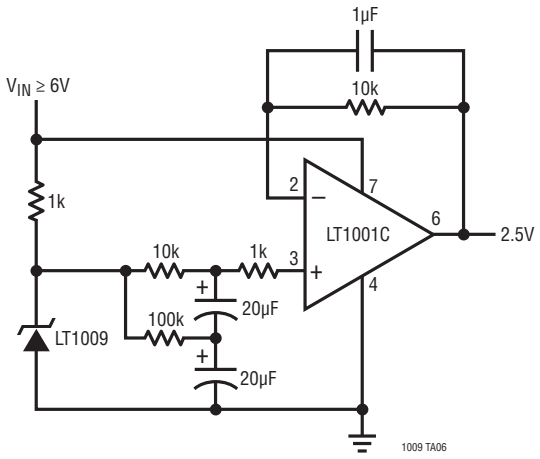

RELATED PARTS

PART NUMBER	DESCRIPTION	COMMENTS
LT1019	Precision Series Reference	Bandgap, 0.05%, 5ppm/°C
LT1236	Precision Series Reference	5V and 10V Zener-Based 5ppm/°C, SO-8 Package
LTC®1798	Micropower Low Dropout Series Reference	0.15% Max, 6.5µA Supply Current
LT1460	Micropower Precision Series Reference	Bandgap, 130µA Supply Current 10ppm/°C, Available in SOT-23
LT1634	Micropower Precision Shunt Voltage Reference	Bandgap 0.05%, 10ppm/°C, 10µA Supply Current
LT1461	Micropower Precision Series Reference	0.04% Max, 3ppm/°C Max, 35µA Supply Current

Linear Technology Corporation
1630 McCarthy Blvd., Milpitas, CA 95035-7417
(408) 432-1900 • FAX: (408) 434-0507 • www.linear.com

LT 0109 REV F • PRINTED IN USA

© LINEAR TECHNOLOGY CORPORATION 1985