5V RS232 Transceiver with 3V Logic Interface and One Receiver Active in Shutdown

FEATURES

- **3V Logic Interface**
- ESD Protection over **±10kV**
- Uses Small Capacitors: 0.1µF, 0.2µF, 1.0µF
- One Low Power Receiver Remains Active While in Shutdown
- Pin Compatible with LT1137A and LT1237
- 120kBaud Operation for R_L = 3k, C_L = 2500pF
- 250kBaud Operation for R_L = 3k, C_L = 1000pF
- CMOS Comparable Low Power: 30mW
- Easy PC Layout—Flowthrough Architecture
- Rugged Bipolar Design
- Outputs Assume a High Impedance State When Off or Powered Down
- Absolutely No Latchup
- 60µA Supply Current in Shutdown
- Available in SO and SSOP Packages

APPLICATIONS

- Notebook Computers
- Palmtop Computers

DESCRIPTION

The LT®1330 is a three driver, five receiver RS232 transceiver with low supply current. Designed to interface with new 3V logic, the LT1330 operates with both a 5V power supply and a 3V logic power supply. The chip may be shut down to micropower operation with one receiver remaining active to monitor RS232 inputs such as ring detect from a modem.

The LT1330 is fully compliant with all EIA RS232 specifications. Additionally, the RS232 line input and output pins are resilient to multiple ±10kV ESD strikes. This eliminates the need for costly TransZorbs® on line pins for the RS232 part.

The LT1330 operates to 120kbaud even driving high capacitive loads. During shutdown, driver and receiver outputs are at a high impedance state allowing devices to be paralleled.

LT, LT, LTC and LTM are registered trademarks of Linear Technology Corporation.
TransZorb is a registered trademark of General Instrments, GSI.

TYPICAL APPLICATION

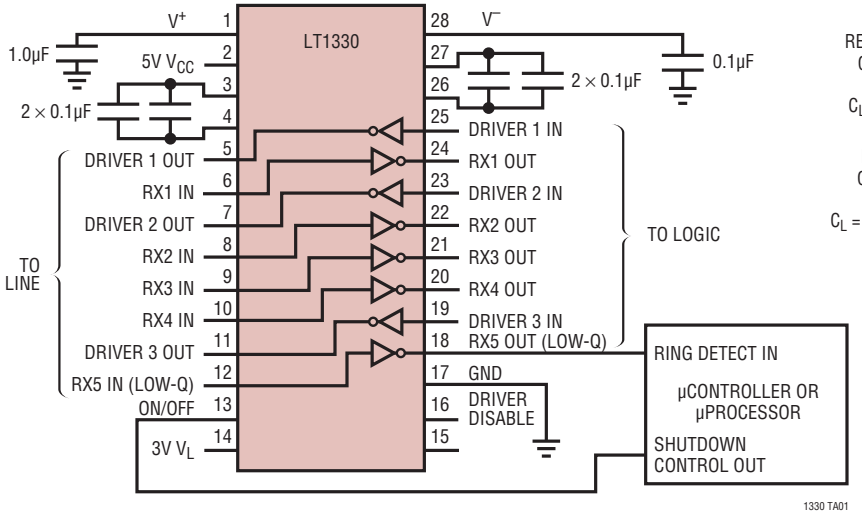

Output Waveforms

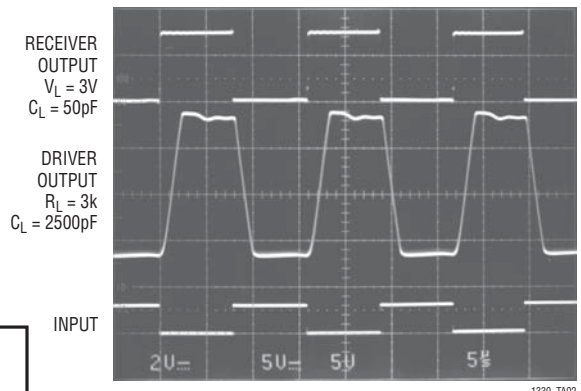

ABSOLUTE MAXIMUM RATINGS

(Note 1)

Supply Voltage (V_{CC}) 6V
Supply Voltage (V_L) 6V
V^+ 13.2V
V^- .....–13.2V
Input Voltage
  Driver..... V^- to V^+
  Receiver .....–30V to 30V
Output Voltage
  Driver.....–30V to 30V
  Receiver .....–0.3V to V_L + 0.3V
Short-Circuit Duration
  V^+ .....30 sec
  V^- .....30 sec
  Driver Output ..... Indefinite
  Receiver Output ..... Indefinite
Operating Temperature Range
  LT1330C..... 0°C to 70°C
Storage Temperature Range.....–65°C to 150°C
Lead Temperature (Soldering, 10 sec) ..... 300°C

PIN CONFIGURATION

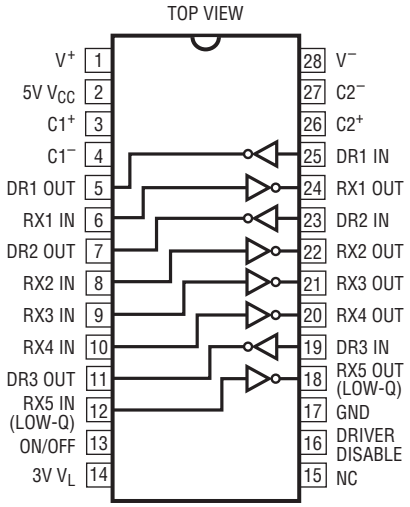

G PACKAGE
28-LEAD PLASTIC SSOP

NW PACKAGE
28-LEAD (WIDE) PDIP

SW PACKAGE
28-LEAD (WIDE) PLASTIC SO

T_{JMAX} = 150°C, θ_{JA} = 96°C/W (G)
T_{JMAX} = 150°C, θ_{JA} = 56°C/W (NW)
T_{JMAX} = 150°C, θ_{JA} = 85°C/W (SW)

Consult factory for Military grade parts.

ORDER INFORMATION

LEAD FREE FINISH	TAPE AND REEL	PART MARKING	PACKAGE DESCRIPTION	TEMPERATURE RANGE
LT1330CG#PBF	LT1330CG#TRPBF	LT1330CG	28-Lead Plastic SSOP	0°C to 70°C
LT1330CNW#PBF	LT1330CNW#TRPBF	LT1330CNW	28-Lead (Wide) PDIP	0°C to 70°C
LT1330CSW#PBF	LT1330CSW#PBF	LT1330CSW	28-Lead (Wide) Plastic SO	0°C to 70°C

Consult LTC Marketing for parts specified with wider operating temperature ranges.
Consult LTC Marketing for information on non-standard lead based finish parts.

For more information on lead free part marking, go to: http://www.linear.com/leadfree/
For more information on tape and reel specifications, go to: http://www.linear.com/tapeandreel/

ELECTRICAL CHARACTERISTICS

The ● denotes the specifications which apply over the full operating temperature range (0°C ≤ T_A ≤ 70°C for commercial grade). (Note 2)

PARAMETER	CONDITIONS		MIN	TYP	MAX	UNITS
Power Supply Generator						
V^+ Output				7.9		V
V^- Output				–7		V
Supply Current (V_{CC})	T_A = 25°C (Note 3)	 ●		6 6	12 14	mA mA
Supply Current (V_L)	(Note 4)			0.1	1	mA

ELECTRICAL CHARACTERISTICS

The ● denotes the specifications which apply over the full operating temperature range (0°C ≤ T_A ≤ 70°C for commercial grade). (Note 2)

PARAMETER	CONDITIONS		MIN	TYP	MAX	UNITS
Supply Current When OFF (V_{CC})	Shutdown (Note 5) Driver Disable	● 	 	0.06 3.00	0.15 	mA mA
Supply Rise Time Shutdown to Turn-On	C1 = C2 = 0.2µF, C^+ = 1.0µF, C^- = 0.1µF			0.2		ms
ON/OFF Pin Thresholds	Input Low Level (Device Shutdown) Input High Level (Device Enabled)	● ●	0.8 	1.4 1.4	 2.4	V V
ON/OFF Pin Current	0V ≤ $V_{ON/OFF}$ ≤ 5V	●	–15		80	µA
DRIVER DISABLE Pin Thresholds	Input Low Level (Drivers Enabled) Input High Level (Drivers Disabled)	● ●	0.8 	1.4 1.4	 2.4	V V
DRIVER DISABLE Pin Current	0V ≤ $V_{DRIVER\ DISABLE}$ ≤ 5V	●	–10		500	µA
Oscillator Frequency	Driver Outputs Loaded R_L = 3k			130		kHz
Any Driver						
Output Voltage Swing	Load = 3k to GND Positive Load = 3k to GND Negative	● ●	5 	7.5 –6.3	 –5	V V
Logic Input Voltage Level	Input Low Level (V_{OUT} = High) Input High Level (V_{OUT} = Low)	● ●	 2	1.4 1.4	0.8 	V V
Logic Input Current	0.8V ≤ V_{IN} ≤ 2V	●		5	20	µA
Output Short-Circuit Current	V_{OUT} = 0V		±9	17		mA
Output Leakage Current	Shutdown V_{OUT} = ±30V (Note 5)	●		10	100	µA
Data Rate (Note 8)	R_L = 3k, C_L = 2500pF R_L = 3k, C_L = 1000pF		120 250			kBAUD kBAUD
Slew Rate	R_L = 3k, C_L = 51pF R_L = 3k, C_L = 2500pF		 4	15 15	30 	V/µs V/µs
Propagation Delay	Output Transition t_{HL} High to Low (Note 6) Output Transition t_{LH} Low to High			0.6 0.5	1.3 1.3	µs µs
Any Receiver						
Input Voltage Thresholds	Input Low Threshold (V_{OUT} = High) Input High Threshold (V_{OUT} = Low)		0.8 	1.3 1.7	 2.4	V V
Hysteresis		●	0.1	0.4	1	V
Input Resistance	V_{IN} = ±10V		3	5	7	kΩ
Output Leakage Current	Shutdown (Note 5) 0 ≤ V_{OUT} ≤ V_{CC}	●		1	10	µA
Receivers 1, 2, 3, 4						
Output Voltage	Output Low, I_{OUT} = –1.6mA Output High, I_{OUT} = 160µA (V_L = 3V)	● ●	 2.7	0.2 2.9	0.4 	V V
Output Short-Circuit Current	Sinking Current, V_{OUT} = V_{CC} Sourcing Current, V_{OUT} = 0V		–10 10	–20 20	 	mA mA
Propagation Delay	Output Transition t_{HL} High to Low (Note 7) Output Transition t_{LH} Low to High			250 350	600 600	ns ns
Receiver 5 (LOW Q-Current RX)						
Output Voltage	Output Low, I_{OUT} = –500µA Output High, I_{OUT} = 160µA (V_L = 3V)	● ●	 2.7	0.2 2.9	0.4 	V V
Output Short-Circuit Current	Sinking Current, V_{OUT} = V_{CC} Sourcing Current, V_{OUT} = 0V		–2 2	–4 4	 	mA mA
Propagation Delay	Output Transition t_{HL} High to Low (Note 7) Output Transition t_{LH} Low to High			1 1	3 3	µs µs

ELECTRICAL CHARACTERISTICS

The ● denotes the specifications which apply over the full operating temperature range (0°C ≤ T_A ≤ 70°C for commercial grade).

Note 1: Stresses beyond those listed under Absolute Maximum Ratings may cause permanent damage to the device. Exposure to any Absolute Maximum Rating condition for extended periods may affect device reliability and lifetime.

Note 2: Testing done at V_{CC} = 5V and $V_{ON/OFF}$ = 3V.

Note 3: Supply current is measured as the average over several charge pump burst cycles. C^+ = 1.0µF, C^- = 0.1µF, C1 = C2 = 0.2µF. All outputs are open, with all driver inputs tied high.

Note 4: V_L supply current is measured with all receiver outputs low.

Note 5: Measurements in shutdown are performed with $V_{ON/OFF}$ ≤ 0.1V. Supply current measurements using driver disable are performed with $V_{DRIVER\ DISABLE}$ ≥ 3V.

Note 6: For driver delay measurements, R_L = 3k and C_L = 51pF. Trigger points are set between the driver's input logic threshold and the output transition to the zero crossing (t_{HL} = 1.4V to 0V and t_{LH} = 1.4V to 0V).

Note 7: For receiver delay measurements, C_L = 51pF. Trigger points are set between the receiver's input logic threshold and the output transition to standard TTL/CMOS logic threshold (t_{HL} = 1.3V to 2.4V and t_{LH} = 1.7V to 0.8V).

Note 8: Data rate operation guaranteed by slew rate, short-circuit current and propagation delay tests.

TYPICAL PERFORMANCE CHARACTERISTICS

Driver Output Voltage

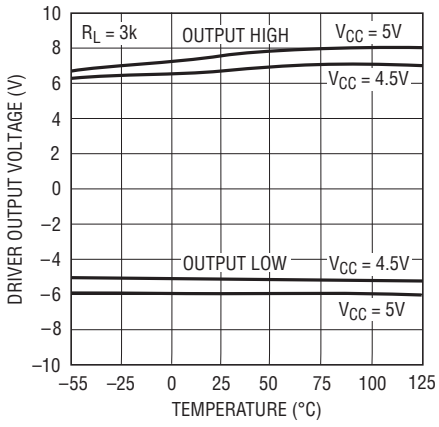

Receiver Input Thresholds

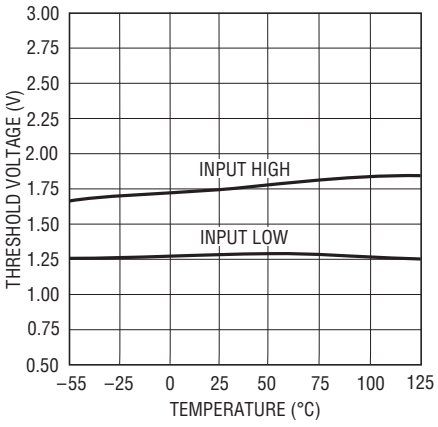

Supply Current vs Data Rate

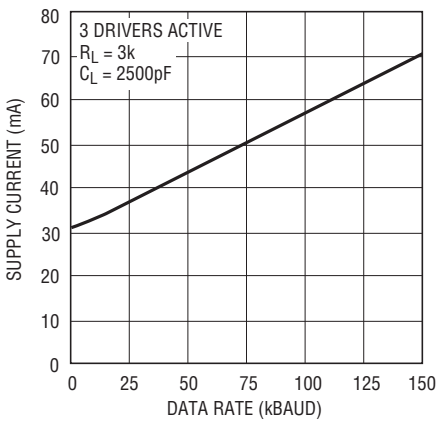

V_{CC} Supply Current in Shutdown

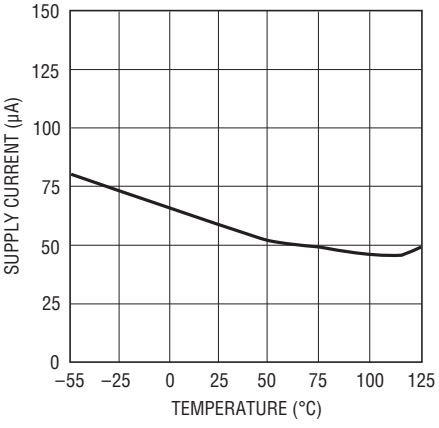

V_{CC} Supply Current in Driver Disable

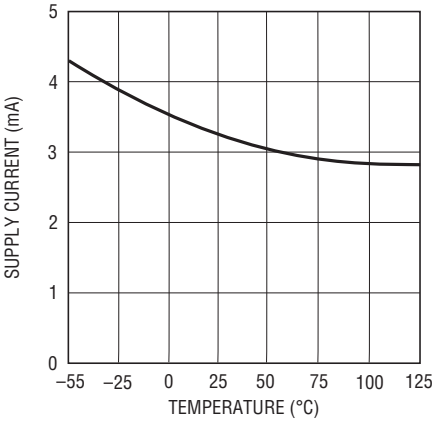

DRIVER DISABLE Threshold

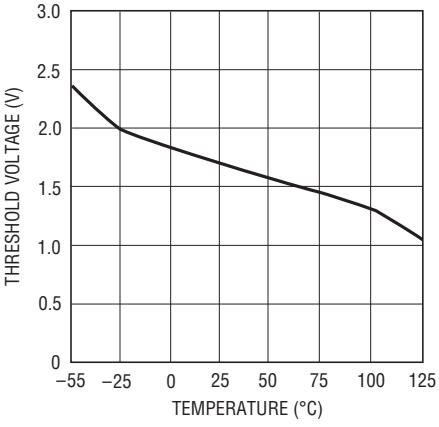

TYPICAL PERFORMANCE CHARACTERISTICS

ON/OFF Thresholds

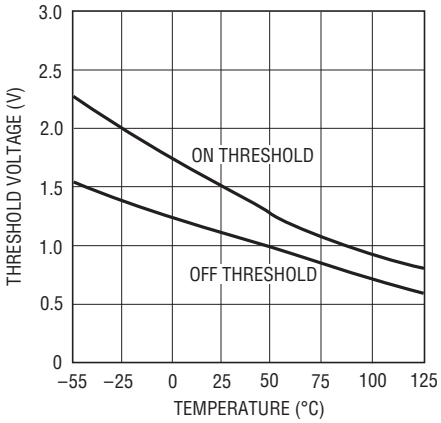

V_{CC} Supply Current

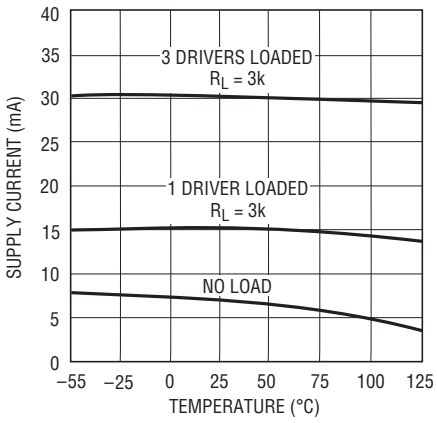

Driver Leakage in Shutdown

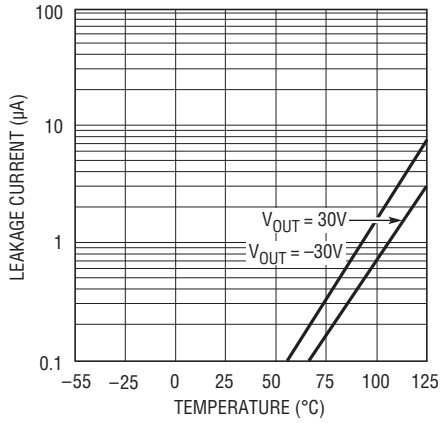

Driver Short-Circuit Current

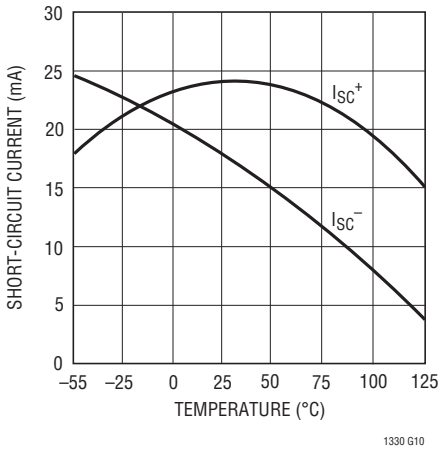

Receiver Short-Circuit Current

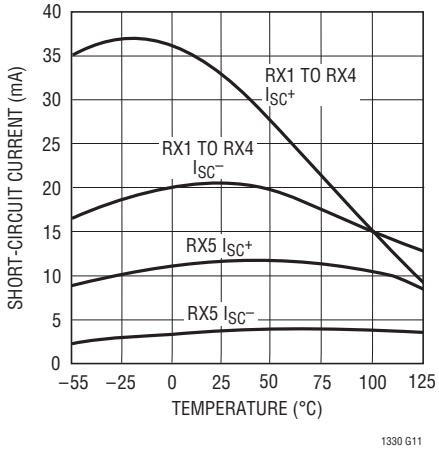

Receiver Output Waveforms

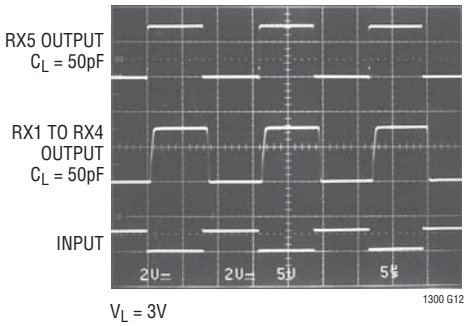

V_L = 3V

Driver Output Waveforms

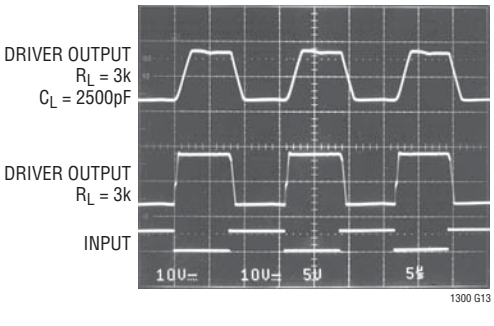

PIN FUNCTIONS

V_{CC}: 5V Input Supply Pin. This pin should be decoupled with a 0.1µF ceramic capacitor close to the package pin. Insufficient supply bypassing can result in low output drive levels and erratic charge pump operation.

V_L: 3V Logic Supply Pin for all RS232 Receivers. Like V_{CC}, the V_L input should be decoupled with a 0.1µF ceramic capacitor. This pin may also be connected to 5V.

GND: Ground Pin.

ON/OFF: TTL/CMOS Compatible Operating Mode Control. A logic low puts the device in the low power shutdown mode. All three drivers and four receivers (RX1, RX2, RX3, and RX4) assume a high impedance output state in shutdown. Only receiver RX5 remains active while the transceiver is in shutdown. The transceiver consumes only 60µA of supply current while in shutdown. A logic high fully enables the transceiver.

DRIVER DISABLE: This pin provides an alternate control for the charge pump and RS232 drivers. A logic high on this pin shuts down the charge pump and places all driver outputs in a high impedance state. All five receivers remain active under these conditions. Floating the driver disable pin or driving it to a logic low level fully enables the transceiver. A logic low on the ON/OFF pin supersedes the state of the DRIVER DISABLE pin. Supply current drops to 3mA when in driver disable mode.

V^+: Positive Supply Output. $V^+ \approx 2V_{CC} - 1.5V$. This pin requires an external charge storage capacitor, $C \geq 1.0\mu F$, tied to ground or 5V. Larger value capacitors may be used to reduce supply ripple. The ratio of the capacitors on V^+ and V^- should be greater than 5 to 1.

V^-: Negative Supply Output. $V^- \approx -(2V_{CC} - 2.5V)$. This pin requires an external charge storage capacitor, $C \geq 0.1\mu F$. See the Applications Information section for guidance in choosing filter capacitors for V^+ and V^-.

$C1^+$, $C1^-$, $C2^+$, $C2^-$: Commutating Capacitor Inputs require two external capacitors, $C \geq 0.2\mu F$: one from $C1^+$ to $C1^-$, and another from $C2^+$ to $C2^-$. The capacitor's effective series resistance should be less than 2Ω. For $C \geq 1\mu F$, low ESR tantalum capacitors work well, although ceramic capacitors may be used with a minimal reduction in charge pump compliance.

DRIVER IN: RS232 Driver Input Pins. These inputs are TTL/CMOS compatible. Unused inputs should be connected to V_{CC}.

DRIVER OUT: Driver Outputs at RS232 Voltage Levels. Driver output swing meets RS232 levels for loads up to 3k. Slew rates are controlled for lightly loaded lines. Output current capability is sufficient for load conditions up to 2500pF. Outputs are in a high impedance state when in shutdown mode, $V_{CC} = 0V$, or when the DRIVER DISABLE pin is active. Outputs are fully short-circuit protected from $V^- + 30V$ to $V^+ - 30V$. Applying higher voltages will not damage the device if the overdrive is moderately current limited. Short circuits on one output can load the power supply generator and may disrupt the signal levels of the other outputs. The driver outputs are protected against ESD to ±10kV for human body model discharges.

RX IN: Receiver Inputs. These pins accept RS232 level signals (±30V) into a protected 5k terminating resistor. The receiver inputs are protected against ESD to ±10kV for human body model discharges. Each receiver provides 0.4V of hysteresis for noise immunity. Open receiver inputs assume a logic low state.

RX OUT: Receiver Outputs with TTL/CMOS Voltage Levels. Outputs are in a high impedance state when in shutdown mode to allow data line sharing. Outputs, including LOW-Q RX OUT, are fully short-circuit protected to ground or V_{CC} with the power on, off, or in shutdown mode.

LOW Q-CURRENT RX IN: Low Power Receiver Input. This special receiver remains active when the part is in shutdown mode, consuming typically 60µA. This receiver has the same 5k input impedance and ±10kV ESD protection characteristics as the other receivers.

LOW Q-CURRENT RX OUT: Low Power Receiver Output. This pin produces the same TTL/CMOS output voltage levels as receivers RX1, RX2, RX3, and RX4 with slightly decreased speed and short-circuit current. Data rates to 120kbaud are supported by this receiver.

ESD PROTECTION

The RS232 line inputs of the LT1330 have on-chip protection from ESD transients up to ±10kV. The protection structures act to divert the static discharge safely to system ground. In order for the ESD protection to function effectively, the power supply and ground pins of the LT1330 must be connected to ground through low impedances. The power supply decoupling capacitors and charge pump storage capacitors provide this low impedance in normal application of the circuit. The only constraint is that low ESR capacitors must be used for bypassing and charge storage. ESD testing must be done with pins V_{CC}, V_L, V^+, V^-, and GND shorted to ground or connected with low ESR capacitors.

ESD Test Circuit

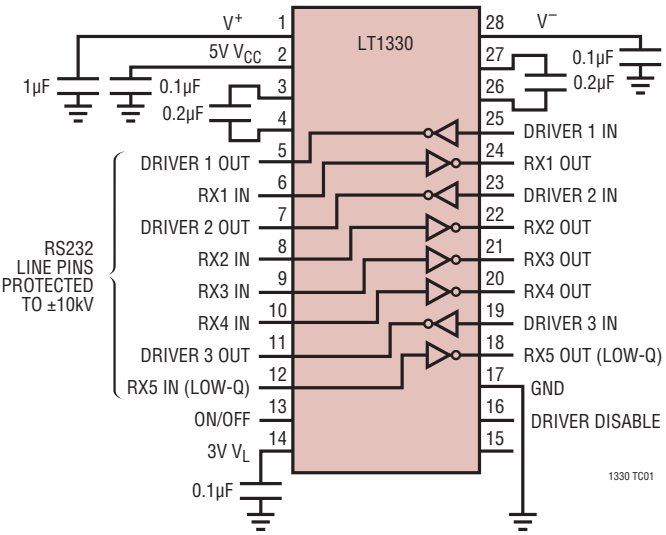

APPLICATIONS INFORMATION

Storage Capacitor Selection

The V^+ and V^- storage capacitors must be chosen carefully to insure low ripple and stable operation. The LT1330 charge pump operates in a power efficient Burst Mode® operation. When storage capacitor voltage drops below a preset threshold, the oscillator is gated on until V^+ and V^- are boosted up to levels exceeding a second threshold. The oscillator then turns off, and current is supplied from the V^+ and V^- storage capacitors.

The V^- potential is monitored to control charge pump operation. It is therefore important to insure lower V^+ ripple than V^- ripple, or erratic operation of the charge pump will result. Proper operation is insured in most applications by choosing the V^+ filter capacitor to be at least 5 times the V^- filter capacitor value. If V^+ is more heavily loaded than V^-, a larger ratio may be needed.

The V^- filter capacitor should be selected to obtain low ripple when the drivers are loaded, forcing the charge pump into continuous mode. A minimum value 0.1µF is suggested.

Do not attempt to reduce V^- ripple when the charge pump is in discontinuous Burst Mode operation. The ripple in this mode is determined by internal comparator thresholds. Larger storage capacitor values increase the burst period, and do not reduce ripple amplitude.

Power Saving Operational Modes

The LT1330 has both shutdown and driver disable operating modes. These operating modes can optimize power consumption based upon applications needs.

The On/Off shutdown control turns off all circuitry except for Low-Q RX5. When RX5 detects a signal, this information can be used to wake up the system for full operation.

If more than one line must be monitored, the driver disable mode provides a power efficient operating option. The driver disable mode turns off the charge pump and RS232 drivers, but keeps all five receivers active. Power consumption in driver disable mode is 3mA from V_{CC}.

Burst Mode is a registered trademark of Linear Technology Corporation.

PACKAGE DESCRIPTION

NW Package
28-Lead PDIP (Wide 0.600)
(LTC DWG # 05-08-1520)

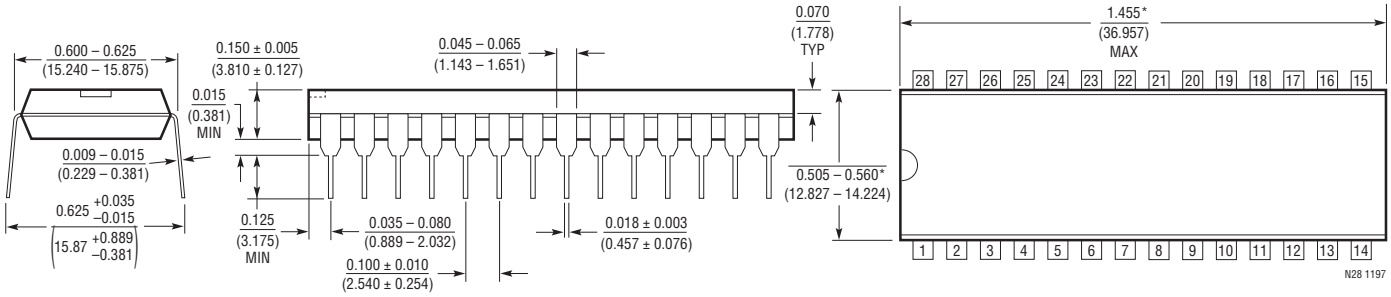

*THESE DIMENSIONS DO NOT INCLUDE MOLD FLASH OR PROTRUSIONS.
MOLD FLASH OR PROTRUSIONS SHALL NOT EXCEED 0.010 INCH (0.254mm)

SW Package
28-Lead Plastic Small Outline (Wide 0.300)
(LTC DWG # 05-08-1620)

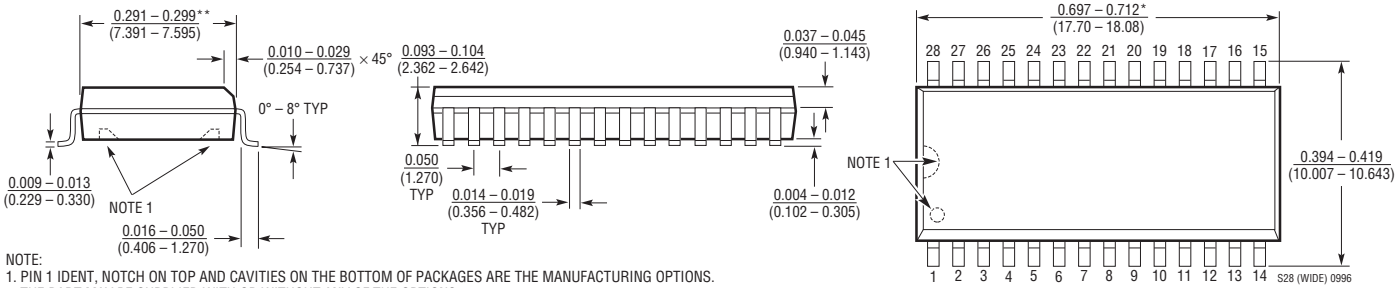

NOTE:
1. PIN 1 IDENT, NOTCH ON TOP AND CAVITIES ON THE BOTTOM OF PACKAGES ARE THE MANUFACTURING OPTIONS.
THE PART MAY BE SUPPLIED WITH OR WITHOUT ANY OF THE OPTIONS

*DIMENSION DOES NOT INCLUDE MOLD FLASH. MOLD FLASH SHALL NOT EXCEED 0.006" (0.152mm) PER SIDE

**DIMENSION DOES NOT INCLUDE INTERLEAD FLASH. INTERLEAD FLASH SHALL NOT EXCEED 0.010" (0.254mm) PER SIDE

PACKAGE DESCRIPTION

G Package
28-Lead Plastic SSOP (0.209)
(LTC DWG # 05-08-1640)

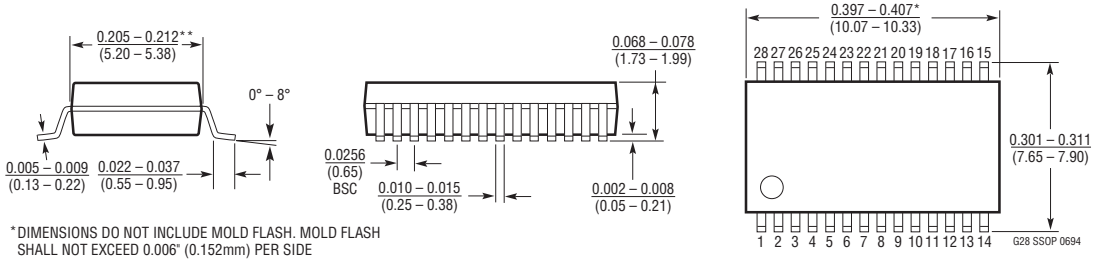

*DIMENSIONS DO NOT INCLUDE MOLD FLASH. MOLD FLASH SHALL NOT EXCEED 0.006" (0.152mm) PER SIDE

**DIMENSIONS DO NOT INCLUDE INTERLEAD FLASH. INTERLEAD FLASH SHALL NOT EXCEED 0.010" (0.254mm) PER SIDE

Information furnished by Linear Technology Corporation is believed to be accurate and reliable. However, no responsibility is assumed for its use. Linear Technology Corporation makes no representation that the interconnection of its circuits as described herein will not infringe on existing patent rights.

TYPICAL APPLICATION

Typical Mouse Driving Application

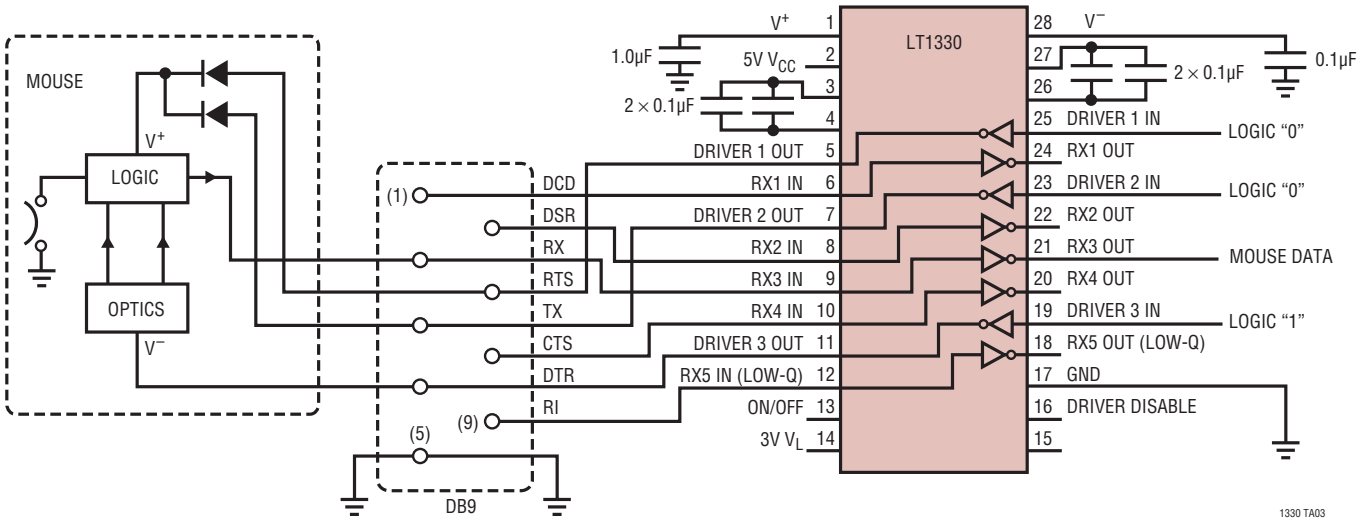

RELATED PARTS

PART NUMBER	DESCRIPTION	COMMENTS
LT1137A	5V RS232 Transceiver	IEC-1000-4-2 ESD Compliant
LT1237	RS232 Transceiver	1 Receiver Active in Shutdown
LT1780/LT1781	2 Driver/2 Receiver RS232 Transceivers	IEC-1000-4-2 ESD Compliant

Linear Technology Corporation
1630 McCarthy Blvd., Milpitas, CA 95035-7417
(408) 432-1900 • FAX: (408) 434-0507 • www.linear.com

LT 0209 REV B • PRINTED IN USA

© LINEAR TECHNOLOGY CORPORATION 1992