Micropower DC/DC Converter with Programmable Peak Current Limit

FEATURES

- **Precise Control of Peak Switch Current**
- **Quiescent Current:**
  - **33μA in Active Mode**
  - **3μA in Shutdown Mode**
- **Low-Battery Detector Active in Shutdown**
- Low Switch V_{CESAT}: 300mV at 500mA
- 8-Lead MSOP and SO Packages
- Operates with V_{IN} as Low as 1.5V
- Logic Level Shutdown Pin

APPLICATIONS

- Battery Backup
- LCD Bias
- Low Power –48V to 5V/3.3V Converters

DESCRIPTION

The LT®1316 is a micropower step-up DC/DC converter that operates from an input voltage as low as 1.5V. A programmable input current limiting function allows precise control of peak switch current. Peak switch current can be set to any value between 30mA and 500mA by adjusting one resistor. This is particularly useful for DC/DC converters operating from high source impedance inputs such as lithium coin cells or telephone lines.

The fixed off-time, variable on-time regulation scheme results in quiescent current of only 33μA in active mode. Quiescent current decreases to 3μA in shutdown with the low-battery detector still active.

The LT1316 is available in 8-lead MSOP and SO packages.

LT, LTC and LT are registered trademarks of Linear Technology Corporation.

TYPICAL APPLICATION

2-Cell to 5V Step-Up Converter

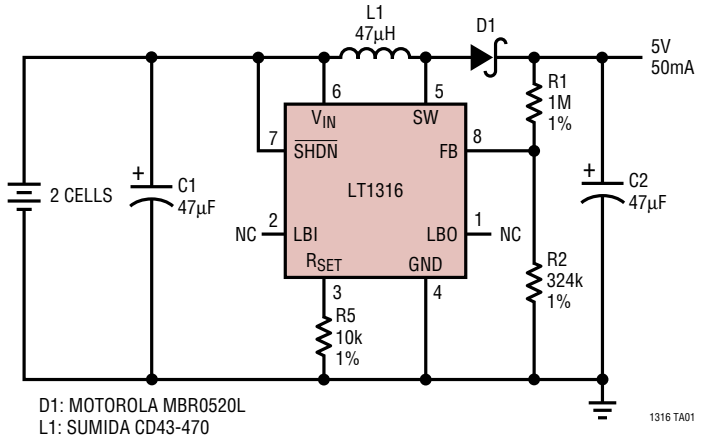

D1: MOTOROLA MBR0520L
L1: SUMIDA CD43-470

Efficiency vs Load Current

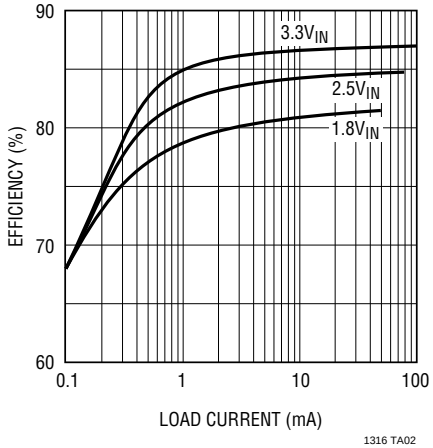

ABSOLUTE MAXIMUM RATINGS

V_{IN} Voltage 12V
SW Voltage ..... –0.4V to 30V
FB Voltage ..... V_{IN} + 0.3V
R_{SET} Voltage 5V
$\overline{SHDN}$ Voltage 6V
LBI Voltage ..... V_{IN}
LBO Voltage 12V
Maximum Switch Current 750mA
Maximum Junction Temperature ..... 125°C
Operating Temperature Range
  Commercial ..... 0°C to 70°C
  Extended Commercial (Note 1) ..... –40°C to 85°C
  Industrial (Note 2) ..... –40°C to 85°C
Storage Temperature Range ..... –65°C to 150°C
Lead Temperature (Soldering, 10 sec) ..... 300°C

PACKAGE/ORDER INFORMATION

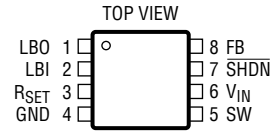

MS8 PACKAGE
8-LEAD PLASTIC MSOP

T_{JMAX} = 125°C, θ_{JA} = 160°C/W

ORDER PART NUMBER
LT1316CMS8
MS8 PART MARKING
LTCD

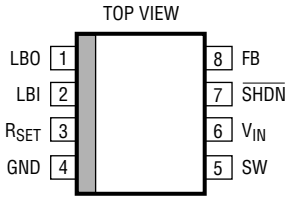

S8 PACKAGE
8-LEAD PLASTIC SO

T_{JMAX} = 125°C, θ_{JA} = 120°C/W

ORDER PART NUMBER
LT1316CS8 LT1316IS8
S8 PART MARKING
1316 1316I

Consult factory for Military grade parts.

ELECTRICAL CHARACTERISTICS

Commercial grade 0°C to 70°C, Industrial grade –40°C to 85°C, V_{IN} = 2V, $V_{\overline{SHDN}} = V_{IN}$, T_A = 25°C unless otherwise noted. (Notes 1, 2)

PARAMETER	CONDITIONS		MIN	TYP	MAX	UNITS
Minimum Operating Voltage				1.5	1.65	V
Maximum Operating Voltage					12	V
Quiescent Current	$V_{\overline{SHDN}}$ = 2V, Not Switching	 ●		33	45 50	µA µA
Quiescent Current in Shutdown	$V_{\overline{SHDN}}$ = 0V, V_{IN} = 2V $V_{\overline{SHDN}}$ = 0V, V_{IN} = 5V	● ●		3 7	5 10	µA µA
FB Pin Bias Current		●		3	30	nA
Line Regulation	V_{IN} = 1.8V to 12V	●		0.04	0.15	%/V
LBI Input Threshold	Falling Edge	●	1.1	1.17	1.25	V
LBI Pin Bias Current		●		3	20	nA
LBI Input Hysteresis		●		35	65	mV
LBO Output Voltage Low	I_{SINK} = 500µA	●		0.2	0.4	V
LBO Output Leakage Current	LBI = 1.7V, LBO = 5V	●		0.01	0.1	µA
$\overline{SHDN}$ Input Voltage High $\overline{SHDN}$ Input Voltage Low		● ●	1.4		 0.4	V V
$\overline{SHDN}$ Pin Bias Current	$V_{\overline{SHDN}}$ = 5V $V_{\overline{SHDN}}$ = 0V	● ●		2 –1	5 –3	µA µA

ELECTRICAL CHARACTERISTICS

Commercial grade 0°C to 70°C, Industrial grade –40°C to 85°C, V_{IN} = 2V, $V_{\overline{SHDN}} = V_{IN}$, T_A = 25°C unless otherwise noted. (Notes 1, 2)

PARAMETER	CONDITIONS		MIN	TYP	MAX	UNITS
Switch OFF Time	FB > 1V	 ●	1.4 1.1	2.0	2.6 3.0	µs µs
	FB < 1V			3.4		µs
Switch ON Time	Current Limit Not Asserted 1V < FB < 1.2V	 ●	4.4 3.4	6.3	8.2 9.5	µs µs
Maximum Duty Cycle	Current Limit Not Asserted 1V < FB < 1.2V	 ●	74 73	76	90 90	% %
Switch Saturation Voltage	I_{SW} = 0.5A I_{SW} = 0.1A	● ●		0.30 0.06	0.4 0.15	V V
Switch Leakage	Switch Off, V_{SW} = 5V	●		0.1	5	µA

Commercial grade 0°C to 70°C, V_{IN} = 2V, $V_{\overline{SHDN}} = V_{IN}$, T_A = 25°C unless otherwise noted.

FB Comparator Trip Point		●	1.21	1.23	1.25	V
Peak Switch Current	R_{SET} = 27.4k, T_A = 25°C R_{SET} = 27.4k, T_A =0°C R_{SET} = 27.4k, T_A = 70°C		90 90 70	100 100 90	110 115 110	mA mA mA
	R_{SET} = 10K R_{SET} = 121k	●	250	290 25	340	mA mA

Industrial grade –40°C to 85°C, V_{IN} = 2V, $V_{\overline{SHDN}} = V_{IN}$, T_A = 25°C unless otherwise noted.

FB Comparator Trip Point		●	1.205	1.23	1.255	V
Peak Switch Current	R_{SET} = 27.4k, R_{SET} = 10k	● ●	70 200	100 290	125 370	mA mA

The ● denotes specifications which apply over the specified temperature range.

Note 1: C grade device specifications are guaranteed over the 0°C to 70°C temperature range. In addition, C grade device specifications are assured over the –40°C to 85°C temperature range by design or correlation, but are not production tested.

Note 2: I grade device specifications are guaranteed over the –40°C to 85°C temperature range.

TYPICAL PERFORMANCE CHARACTERISTICS

Load Transient Response

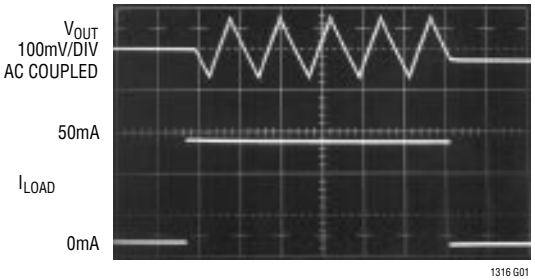

Burst Mode™ Operation

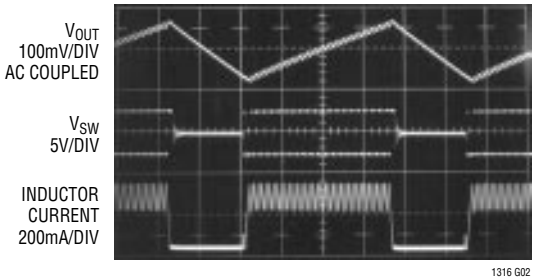

Burst Mode IS A TRADEMARK OF LINEAR TECHNOLOGY CORPORATION.

TYPICAL PERFORMANCE CHARACTERISTICS

Switch Saturation Voltage vs Switch Current

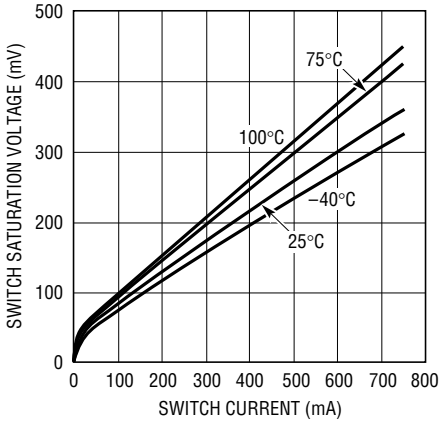

LBI Pin Bias Current vs Temperature

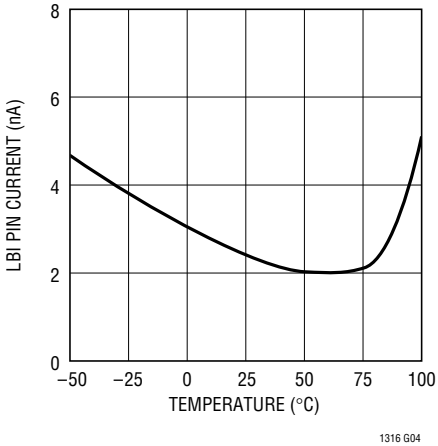

Off-Time vs Temperature

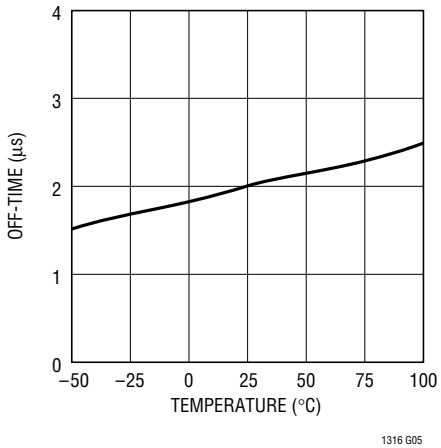

Maximum On-Time vs Temperature

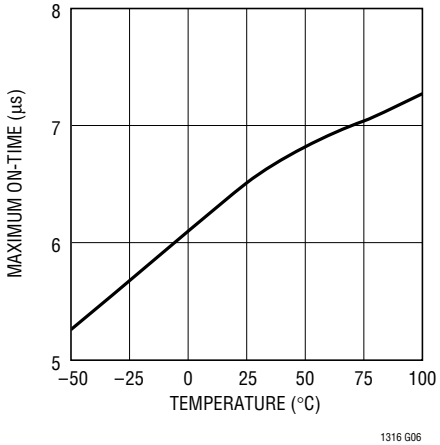

Quiescent Current vs Temperature

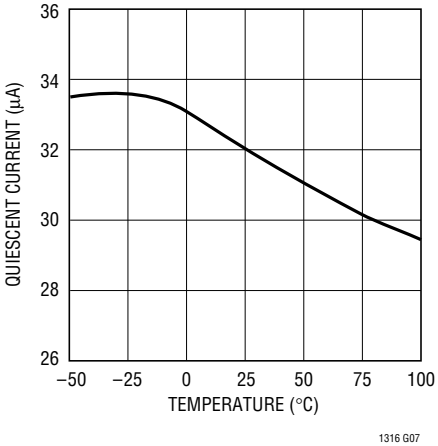

Feedback Voltage vs Temperature

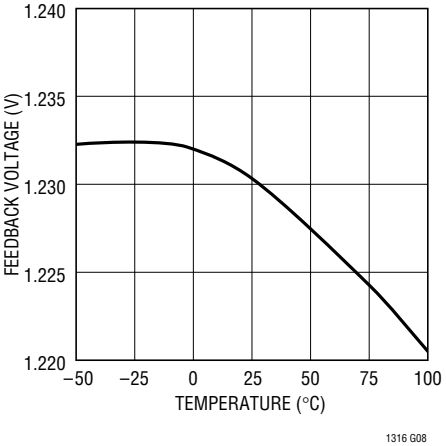

FB Pin Bias Current vs Temperature

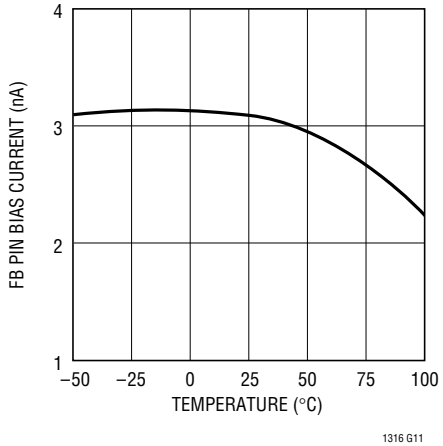

Shutdown Pin Bias Current vs Shutdown Pin Voltage

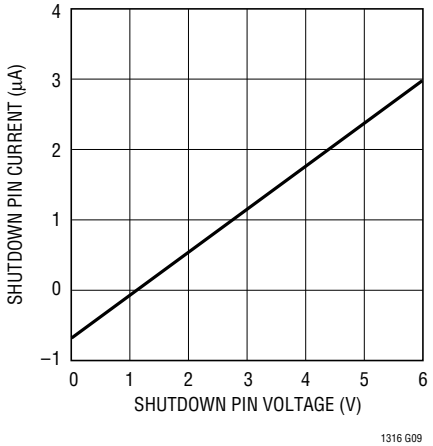

Peak Switch Current vs Temperature

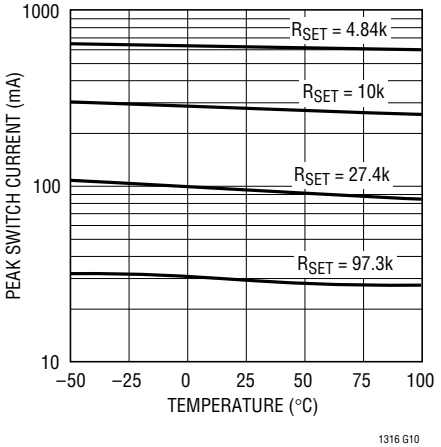

PIN FUNCTIONS

LBO (Pin 1): Low-Battery Detector Output. Open collector can sink up to 500µA. Low-battery detector remains active in shutdown mode.

LBI (Pin 2): Low-Battery Detector Input. When voltage at this pin drops below 1.17V, LBO goes low.

R_{SET} (Pin 3): A resistor between R_{SET} and GND programs peak switch current. The resistor value should be between 3k and 150k. Do not float or short to ground. This is a high impedance node. Keep traces at this pin as short as possible. Do not put capacitance at this pin.

GND (Pin 4): Ground. Connect directly to ground plane.

SW (Pin 5): Collector of NPN Power Transistor. Keep traces at this pin as short as possible.

V_{IN} (Pin 6): Input Supply. Must be bypassed close to the pin.

$\overline{SHDN}$ (Pin 7): Shutdown. Ground this pin to place the part in shutdown mode (only the low-battery detector remains active). Tie to a voltage between 1.4V and 6V to enable the device. $\overline{SHDN}$ pin is logic level and need only meet the logic specification (1.4V for high, 0.4V for low).

FB (Pin 8): Feedback Pin. Reference voltage is 1.23V. Connect resistive divider tap here. Minimize trace area at FB. Set V_{OUT} according to: $V_{OUT} = 1.23V(1 + R1/R2)$.

BLOCK DIAGRAM

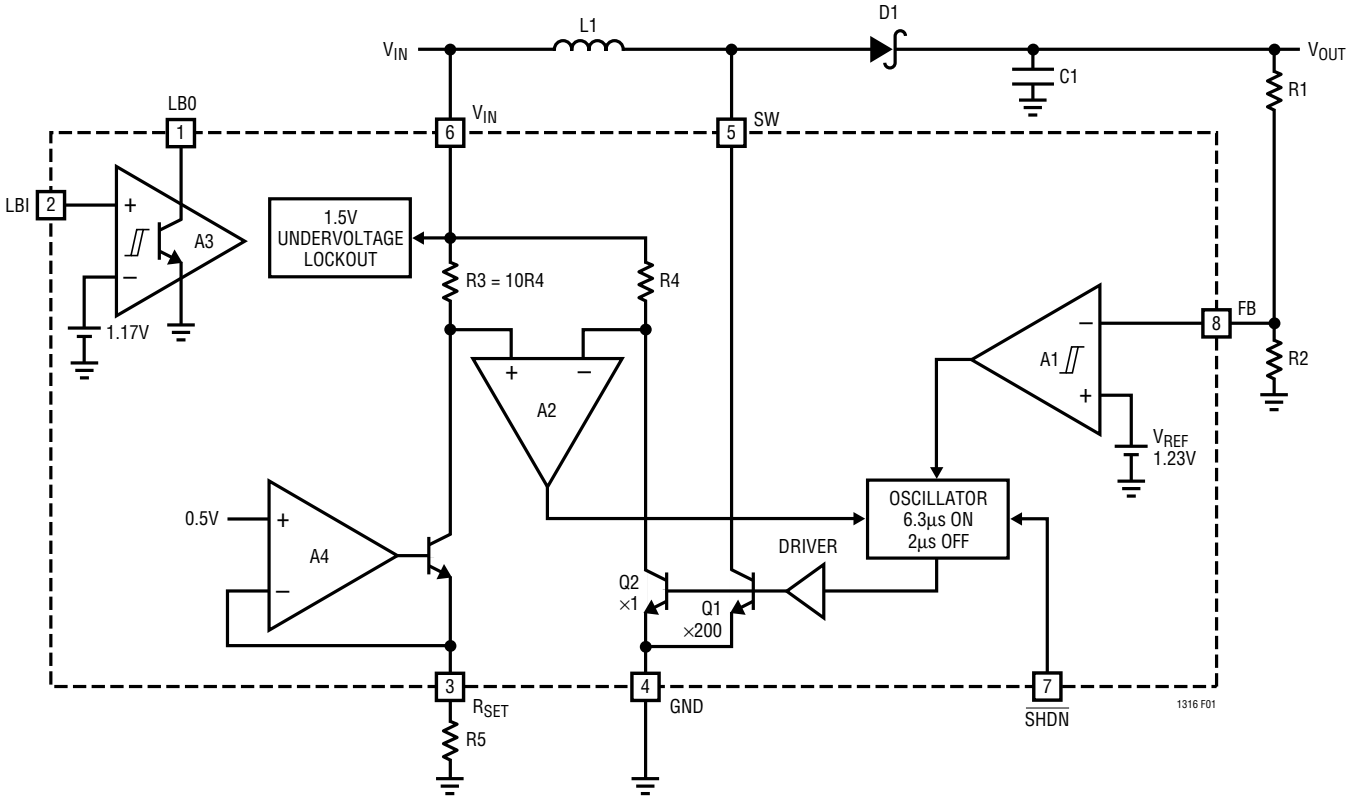

Figure 1. LT1316 Block Diagram

APPLICATIONS INFORMATION

Table 1 simplifies component selection for commonly used input and output voltages. The methods used in determining these values are discussed in more detail later in this data sheet.

V_{OUT} can be set using the equation:

$$V_{OUT} = 1.23\left(\frac{R2 + R1}{R2}\right)$$

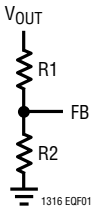

Table 1. R_{SET} Resistor and Inductor Values

V_{IN}	V_{OUT}	LOAD CURRENT	R_{SET} RESISTOR	INDUCTOR	PEAK SWITCH CURRENT
2	5	10mA	36.8k	100µH	80mA
2	5	25mA	18.2k	68µH	165mA
2	5	50mA	10k	47µH	320mA
2	5	75mA	6.81k	33µH	500mA
5	12	100mA	6.81k	82µH	490mA
5	28	1mA	75k	100µH	56mA
5	28	5mA	22.1k	100µH	140mA
5	28	10mA	10k	100µH	270mA

Operation

To understand operation of the LT1316, first examine Figure 1. Comparator A1 monitors FB voltage which is V_{OUT} divided down by resistor divider network R1/R2. When voltage at the FB pin drops below the reference voltage (1.23V), A1's output goes high and the oscillator is enabled. The oscillator has an off-time fixed at 2µs and an on-time limited to 6.3µs. Power transistor Q1 is cycled on and off by the oscillator forcing current through the inductor to alternately ramp up and down (see Figure 2).

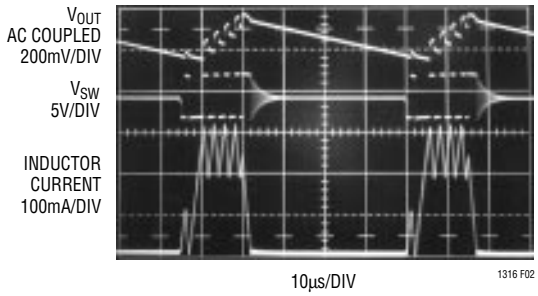

Figure 2. Switching Waveforms

During the portion of the switch cycle when Q1 is turned off, current is forced through D1 to C1 causing output voltage to rise. This switching action continues until output voltage rises enough to overcome A1's hysteresis.

Peak switch current is set by a resistor from the R_{SET} pin to ground. Voltage at the R_{SET} pin is forced to 0.5V by A4 and is used to set up a constant current through R5. This current also flows through R3 which sets the voltage at the positive input of comparator A2. When Q1 turns on, the SW pin goes low and current ramps up at the rate V_{IN}/L. Current through Q2 is equal to Q1's current divided by 200. When current through Q2 causes the voltage drop across R4 and R3 to be equal, A2 changes state and resets the oscillator, causing Q1 to turn off. Shutdown is accomplished by grounding the $\overline{SHDN}$ pin.

The low-battery detector A3 has its own 1.17V reference and is always on. The open collector output device can sink up to 500µA. Approximately 35mV of hysteresis is built into A3 to reduce "buzzing" as the battery voltage reaches the trip level.

Current Limit

During active mode when the part is switching, current in the inductor ramps up each switch cycle until reaching a preprogrammed current limit. This current limit value must be set by placing the appropriate resistor from the R_{SET} pin to ground. This resistance value can be found by using Figure 3 to locate the desired DC current limit and

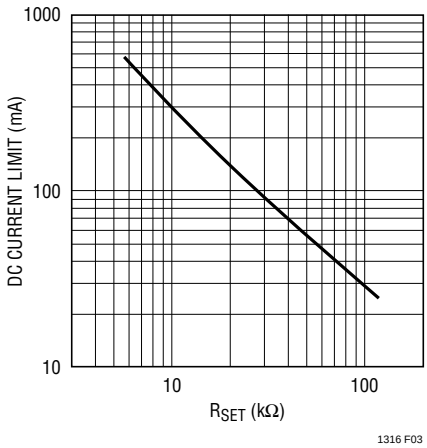

Figure 3. DC Current Limit vs R_{SET} Resistor
Note: DC Current is the Peak Switch Current if the Power Transistor had Zero Turn-Off Delay

APPLICATIONS INFORMATION

then adding in the amount of overshoot that will occur due to turn-off delay of the power transistor. This turn-off delay is approximately 300ns.

Peak switch current = DC current limit from graph + V_{IN}/L(turn-off delay)

Example:

Set peak switch current to 100mA for: V_{IN} = 2V, L = 33µH

Overshoot = V_{IN}/L(turn-off delay) = (2/33µH)(300ns) = 18.2mA

Refer to R_{SET} graph and locate (100mA – 18.2mA) ≈ 82mA

R_{SET} ≈ 33k

Calculating Duty Cycle

For a boost converter running in continuous conduction mode, duty cycle is constrained by V_{IN} and V_{OUT} according to the equation:

$$DC = \frac{V_{OUT} - V_{IN} + V_D}{V_{OUT} - V_{SAT} + V_D}$$

where V_D = diode voltage drop ≈ 0.4V and V_{SAT} = switch saturation voltage ≈ 0.2V.

If the duty cycle exceeds the LT1316's minimum specified duty cycle of 0.73, the converter cannot operate in continuous conduction mode and must be designed for discontinuous mode operation.

Inductor Selection and Peak Current Limit for Continuous Conduction Mode

Peak current and inductance determine available output power. Both must be chosen properly. If peak current or inductance is increased, output power increases. Once output power or current and duty cycle are known, peak current can be set by the following equation, assuming continuous mode operation:

$$I_{PEAK} = \frac{2(I_{OUT})}{1 - DC} \quad (1)$$

Inductance can now be calculated using the peak current:

$$L = \frac{V_{OUT} - V_{IN} + V_D}{0.4(I_{PEAK})}(t_{OFF}) \quad (2)$$

where t_{OFF} = 2µs and V_D = 0.4V.

As a result of equations 1 and 2, ripple current during switching will be 40% of the peak current (see Figure 2). Using these equations at the specified I_{OUT}, the part is delivering approximately 60% of its maximum output power. In other words, the part is operating on a 40% reserve. This is a safe margin to use and can be decreased if input voltage and output current are tightly controlled.

For some applications, this recommended inductor size may be too large. Inductance can be reduced but available output power will decrease. Also, ripple current during switching will increase and may cause discontinuous operation. Discontinuous operation occurs when inductor current ramps down to zero at the end of each switch cycle (see Figure 4). Shown in Figure 5 is minimum inductance vs peak current for the part to remain in continuous mode.

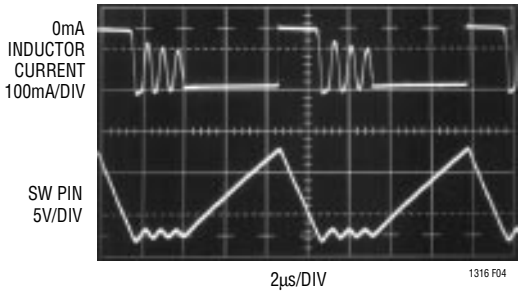

Figure 4. Discontinuous Mode Operation

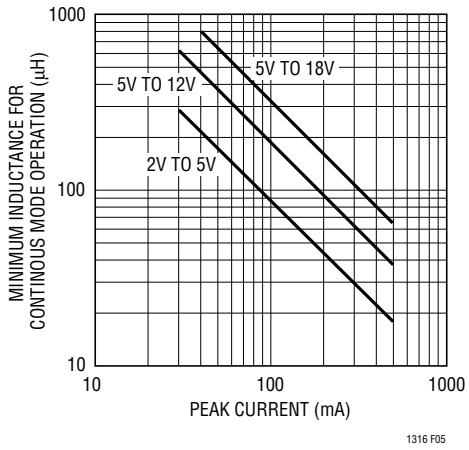

Figure 5. Minimum Inductance vs Peak Current for Continuous Mode Operation

APPLICATIONS INFORMATION

Discontinuous Mode Operation

A boost converter with a high V_{OUT}:V_{IN} ratio operates with a high duty cycle in continuous mode. For duty cycles exceeding the LT1316's guaranteed minimum specification of 0.73, the circuit will need to be designed for discontinuous operation. Additionally, very low peak current limiting below 50mA may necessitate operating in this mode unless high inductance values are acceptable. When operating in discontinuous mode, a different equation governs available output power. For each switch cycle, the inductor current ramps down to zero, completely releasing the stored energy. Energy stored in the inductor at any time is equal to 1/2 LI^2. Because this energy is released each cycle, the equation for maximum power out is:

$$P_{OUT(MAX)} = 1/2L(I_{PEAK}^2)f$$

$$\text{Where } f = \left(\frac{1}{\frac{I_{PEAK}(L)}{V_{IN} - V_{SAT}} + t_{OFF}}\right)$$

When designing for very low peak currents (<50mA), the inductor size needs to be large enough so that on-time is a least 1µs. On-time can be calculated by the equation:

$$\text{On-Time} = \left(\frac{I_{PEAK} \bullet L}{(V_{IN} - V_{SAT})}\right)$$

where V_{SAT} = 0.2V.

Also, at these low current levels, current overshoot due to power transistor turn-off delay will be a significant portion of peak current. Increasing inductor size will keep this to a minimum.

Design Example 1

Requirements: V_{IN} = 2V, V_{OUT} = 5V and I_{LOAD} = 10mA.

1. Find duty cycle

$$DC = \left(\frac{V_{OUT} - V_{IN} + V_D}{V_{OUT} - V_{SAT} + V_D}\right) = \left(\frac{5 - 2 + 0.4}{5 - 0.2 + 0.4}\right) = 0.654$$

Because duty cycle is less than the LT1316 minimum specification (0.73), the circuit can be designed for continuous operation.

2. $I_{PEAK} = \frac{2(I_{OUT})}{1 - DC} = \frac{2(10mA)}{1 - 0.654} = 58mA$

3. Find L

$$L = \left(\frac{V_{OUT} - V_{IN} + V_D}{0.4(I_{PEAK})}\right) t_{OFF}$$

$$= \left(\frac{5 - 2 + 0.4}{0.4(58mA)}\right) 2\mu s$$

$$= 293\mu H$$

4. Find R_{SET} resistor

$$\text{Overshoot} = \left(\frac{V_{IN}}{L}\right) 300ns$$

$$= \left(\frac{2}{330\mu H}\right) = 1.8mA$$

Find R_{SET} from Figure 3 for 58mA – 1.8mA = 56.2mA

$R_{SET} \approx 47k$

Design Example 2

Requirements: V_{IN} = 3.3V, V_{OUT} = 28V and I_{LOAD} = 5mA.

1. Find duty cycle:

$$DC = \left(\frac{V_{OUT} - V_{IN} + V_D}{V_{OUT} - V_{SAT} + V_D}\right) = \left(\frac{28 - 3.3 + 0.4}{28 - 0.2 + 0.4}\right) = 0.89$$

Because duty cycle exceeds LT1316 minimum specification of 73%, the circuit must be designed for discontinuous operation.

2. Find $P_{OUT(MAX)}$

Multiply P_{OUT} by 1.4 to give a safe operating margin

$P_{OUT(MAX)} = P_{OUT}(1.4) = (5mA)(28V)(1.4) = 0.196W$

3. Set the on-time to the data sheet minimum of 3.4µs and find L

$$L = \frac{(t_{ON}^2)(V_{IN} - V_{SAT})^2}{2P_{OUT(MAX)}(t_{ON} + t_{OFF})}$$

$$= \frac{(3.4\mu s^2)(3.3 - 0.2)^2}{2(0.196W)(3.4\mu s + 2\mu s)} = 52\mu H$$

APPLICATIONS INFORMATION

4. Find I_{PEAK} for 3.4µs on-time

$$I_{PEAK} = \frac{t_{ON}(V_{IN} - V_{SAT})}{L} = \frac{3.4\mu s(3.3 - 0.2)}{52\mu H}$$

$$= 0.202A$$

5. Find R_{SET} resistor

$$\text{Overshoot} = \left(\frac{V_{IN}}{L}\right)300ns$$

$$= \left(\frac{3.3}{52\mu H}\right)300ns = 19mA$$

Find R_{SET} from Figure 3 for 0.202A – 19mA = 0.183A

$R_{SET} \approx 13k$

These discontinuous mode equations are designed to minimize peak current at the expense of inductor size. If smaller inductors are desired peak current must be increased.

Capacitor Selection

Low ESR (Equivalent Series Resistance) capacitors should be used at the output of the LT1316 to minimize output ripple voltage. High quality input bypassing is also required. For surface mount applications AVX TPS series tantalum capacitors are recommended. These have been specifically designed for switch mode power supplies and have low ESR along with high surge current ratings.

For through-hole applications Sanyo OS-CON capacitors offer extremely low ESR in a small package size. If peak switch current is reduced using the R_{SET} pin, capacitor requirements can be eased and smaller, higher ESR units can be used. Ordinary generic capacitors can generally be used when peak switch current is less than 100mA, although output voltage ripple may increase.

Diodes

Most of the application circuits on this data sheet specify the Motorola MBR0520L surface mount Schottky diode. This 0.5A, low drop diode suits the LT1316 well. In lower current applications, a 1N4148 can be used although efficiency will suffer due to the higher forward drop. This effect is particularly noticeable at low output voltages. For higher output voltage applications, such as LCD bias generators, the extra drop is a small percentage of the output voltage so the efficiency penalty is small. The low cost of the 1N4148 makes it attractive wherever it can be used. In through-hole applications the 1N5818 is the all around best choice.

Lowering Output Ripple Voltage

To obtain lower output ripple voltage, a small feedforward capacitor of about 50pF to 100pF may be placed from V_{OUT} to FB as detailed in Figure 6. Ripple voltages with and without the added capacitor are pictured in Figures 7 and 8.

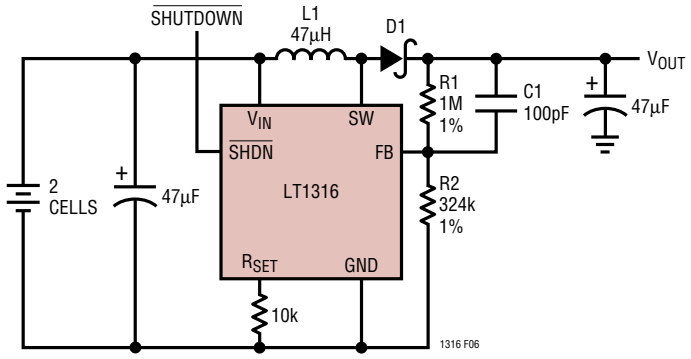

Figure 6. 2-Cell to 5V Step-Up Converter with Reduced Output Ripple Voltage

APPLICATIONS INFORMATION

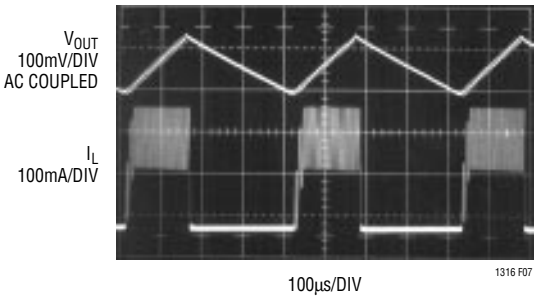

Figure 7. Switching Waveforms for the Circuit Shown in Figure 7 Without C1. The Output Ripple Voltage is Approximately 140mV$_{P-P}$

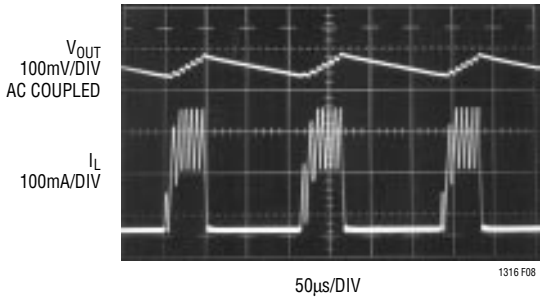

Figure 8. By Adding C1, Output Ripple Voltage is Reduced to Less Than 80mV$_{P-P}$

Layout/Input Bypassing

The LT1316's high speed switching mandates careful attention to PC board layout. Suggested component placement is shown in Figure 9. The input supply must have low impedance at AC and the input capacitor should be placed as indicated in the figure. The value of this capacitor depends on how close the input supply is to the IC. In situations where the input supply is more than a few inches away from the IC, a 47µF to 100µF solid tantalum bypass capacitor is required. If the input supply is close to the IC, a 1µF ceramic capacitor can be used instead. The LT1316 switches current in pulses up to 0.5A, so a low impedance supply must be available. If the power source (for example, a 2 AA cell battery) is within 1 or 2 inches of the IC, the battery itself provides bulk capacitance and the 1µF ceramic capacitor acts to smooth voltage spikes at switch turn-on and turn-off. If the power source is far away from the IC, inductance in the power source leads results in high impedance at high frequency. A local high capacitance bypass is then required to restore low impedance at the IC.

Low-Battery Detector

The LT1316 contains an independent low-battery detector that remains active when the device is shut down. This detector, actually a hysteretic comparator, has an open collector output that can sink up to 500µA. The comparator also operates below the switcher's undervoltage lockout threshold, operating until V_{IN} reaches approximately 1.4V.

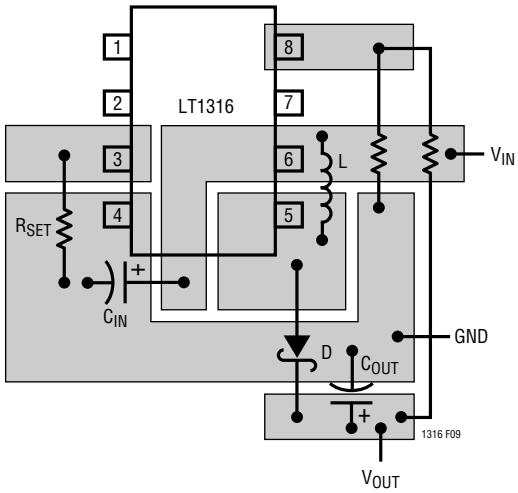

Figure 9. Suggested PC Layout

TYPICAL APPLICATIONS

Nonisolated –48V to 5V Flyback Converter

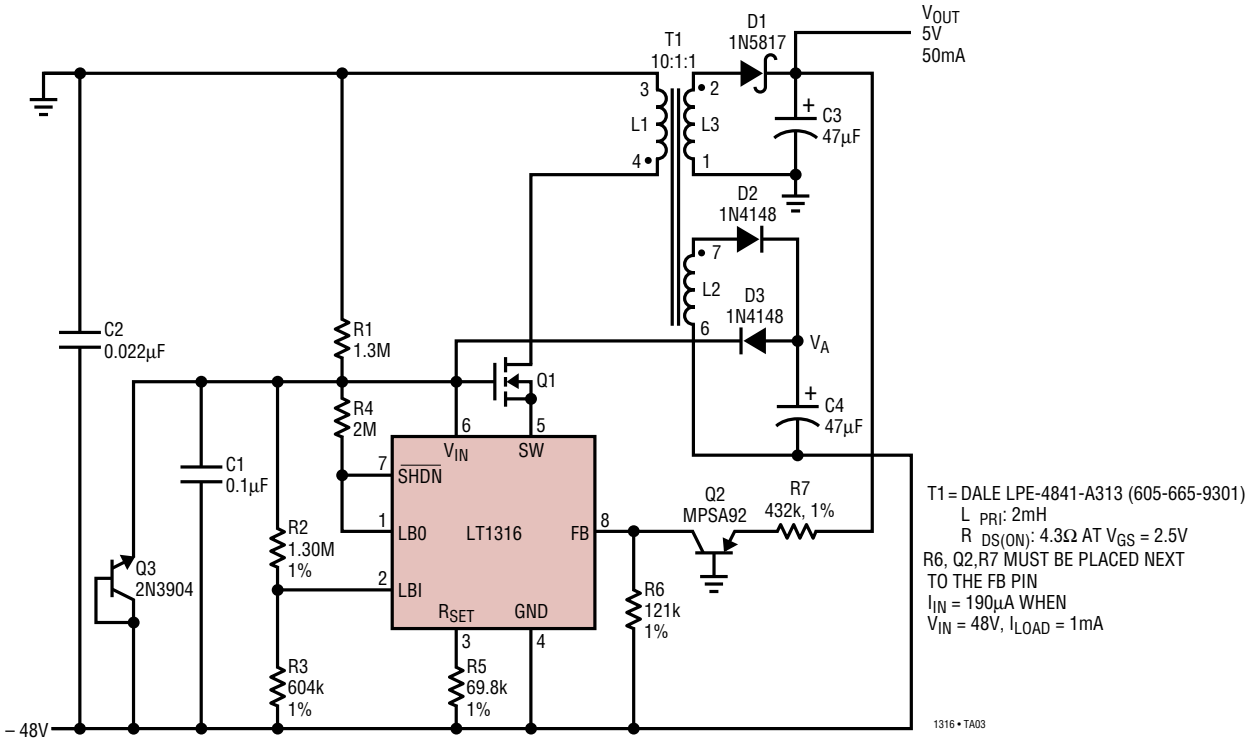

T1 = DALE LPE-4841-A313 (605-665-9301)
L PRI: 2mH
R DS(ON): 4.3Ω AT V_{GS} = 2.5V
R6, Q2,R7 MUST BE PLACED NEXT TO THE FB PIN
I_{IN} = 190µA WHEN V_{IN} = 48V, I_{LOAD} = 1mA

Efficiency vs Load Current

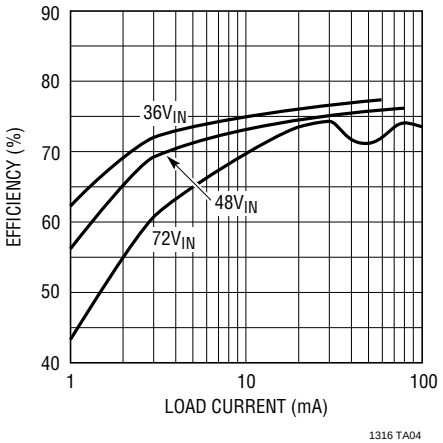

TYPICAL APPLICATIONS

Positive-to-Negative Converter for LCD Bias

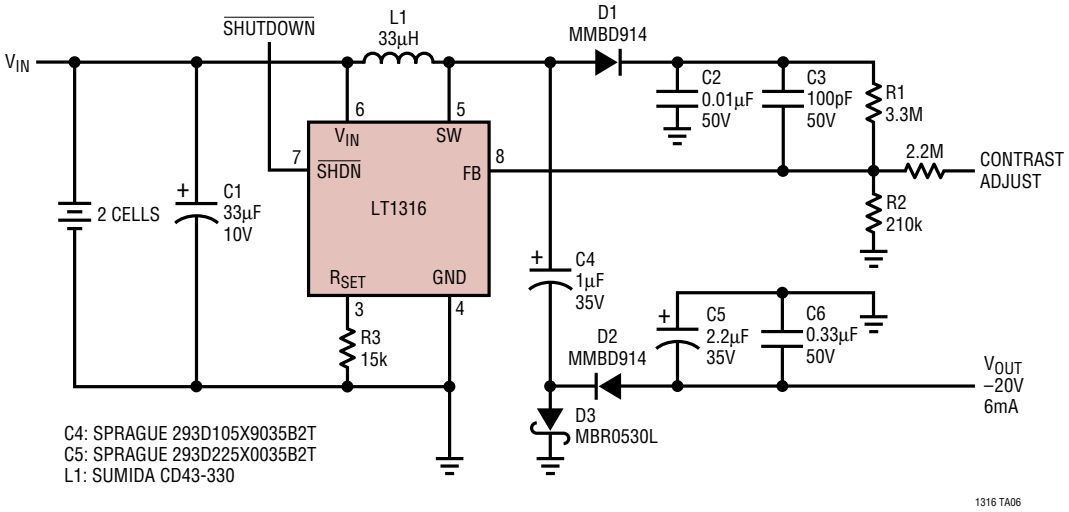

Battery-Powered Solenoid Driver

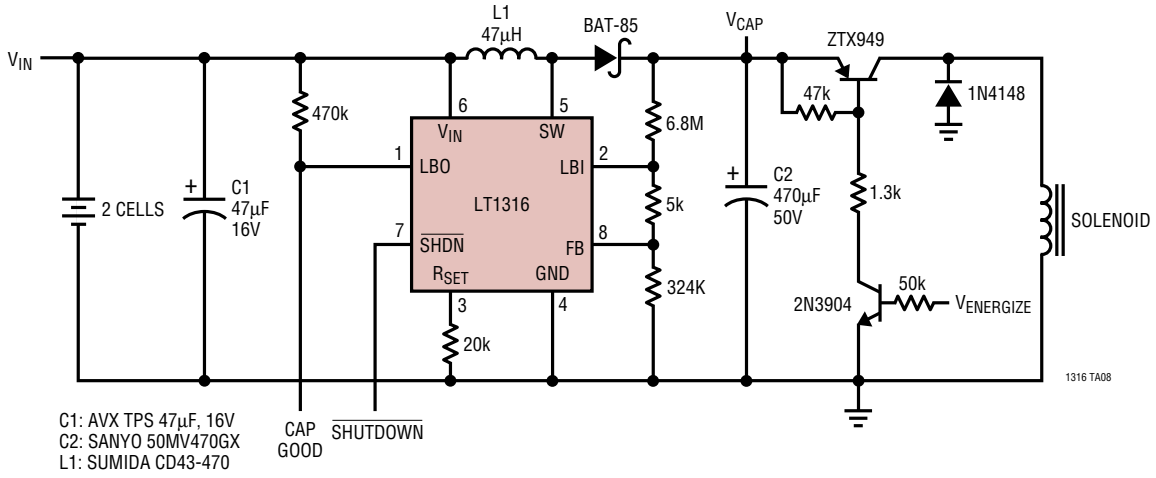

When Solenoid Is Energized ($V_{ENERGIZE}$ High) Peak Input Current Remains Low and Controlled, Maximizing Battery Life

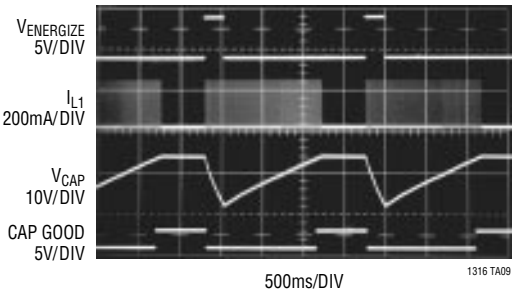

TYPICAL APPLICATIONS

Super Cap Backup Supply

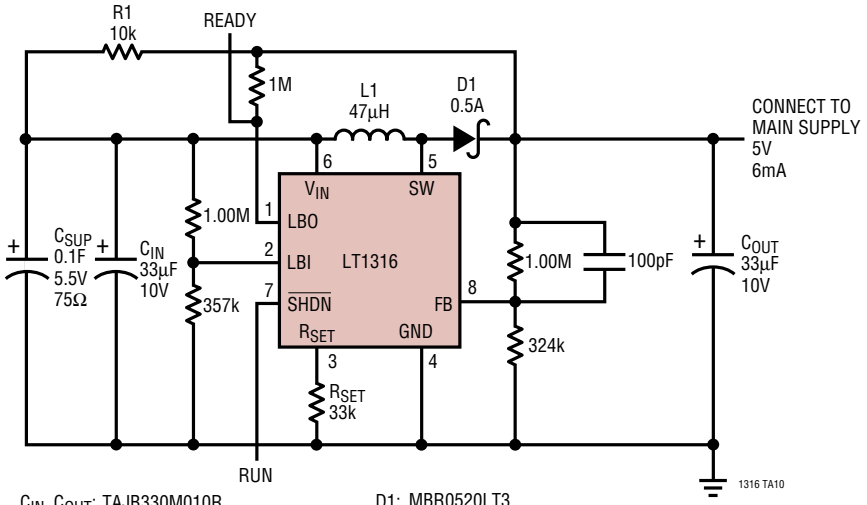

C_{IN}, C_{OUT}: TAJB330M010R
C_{SUP}: PANASONIC EEC-S5R5V104

D1: MBR0520LT3
L1: SUMIDA CD43-470

50V to 6V Isolated Flyback Converter

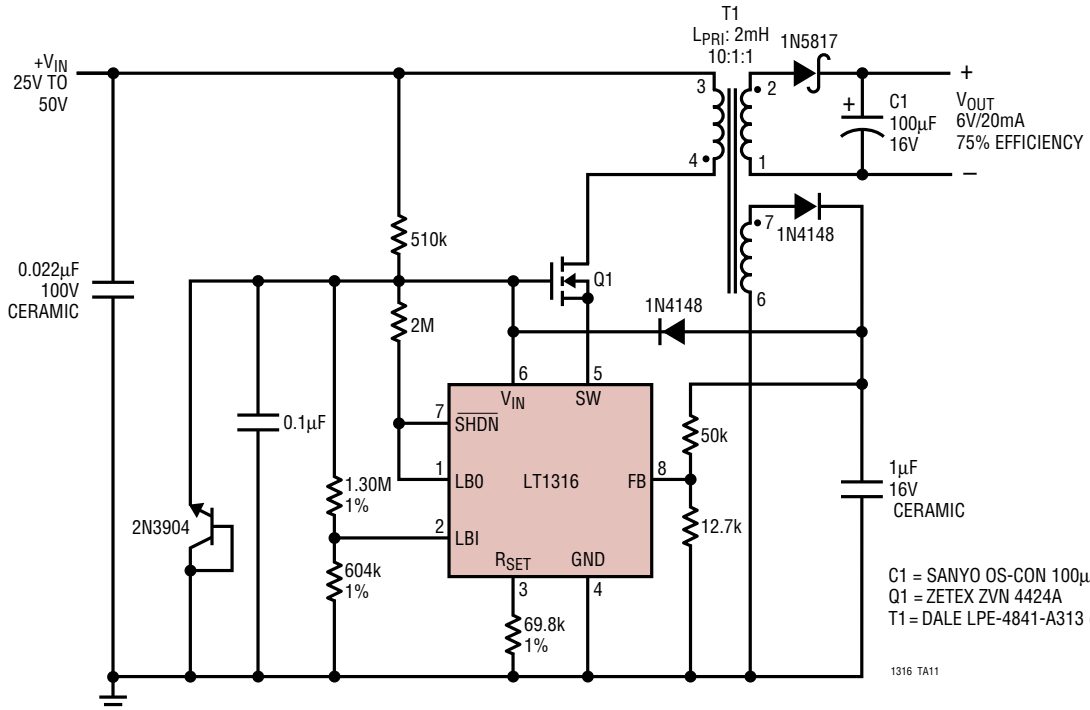

C1 = SANYO OS-CON 100µF, 16V
Q1 = ZETEX ZVN 4424A
T1 = DALE LPE-4841-A313 (605-665-9301)

TYPICAL APPLICATIONS

LCD Bias Generator with Output Disconnect in Shutdown

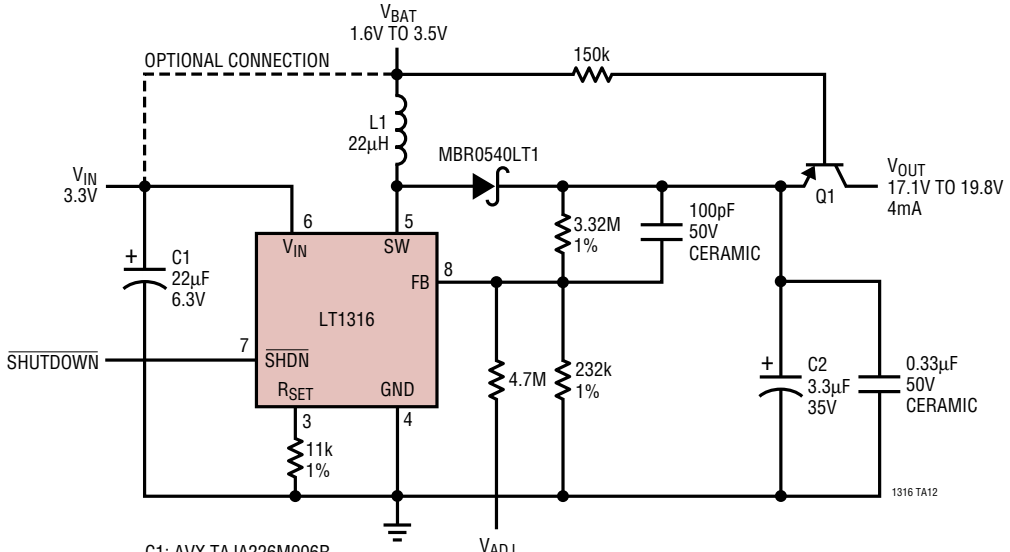

C1: AVX TAJA226M006R
C2: AVX TAJB335M035R
L1: MURATA LQH3C220K04
Q1: MMBT3906LT3

Universal Serial Bus (USB) to 5V/100mA DC/DC Converter

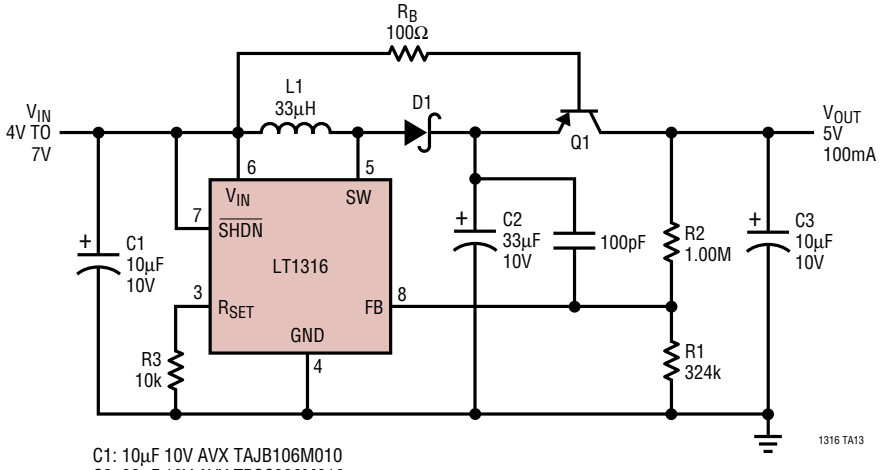

C1: 10µF 10V AVX TAJB106M010
C2: 33µF 10V AVX TPSC336M010
C3: 10µF ALUMINUM ELECTROLYTIC
D1: MBR0520LT1
L1: 33µH SUMIDA CD43 (OR COILCRAFT DO1608)
Q1: MPS1907A

PACKAGE DESCRIPTION

Dimensions in inches (millimeter) unless otherwise noted.

MS8 Package
8-Lead Plastic MSOP
(LTC DWG # 05-08-1660)

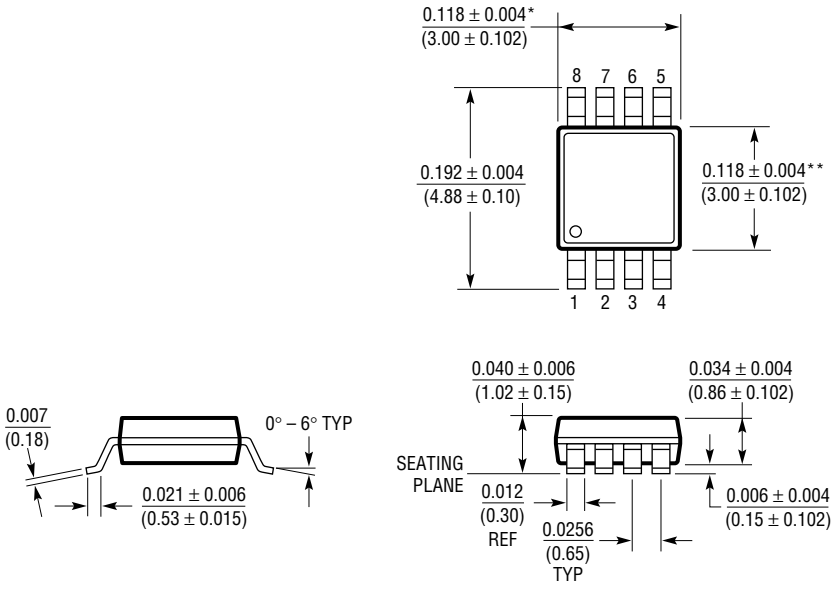

* DIMENSION DOES NOT INCLUDE MOLD FLASH, PROTRUSIONS OR GATE BURRS. MOLD FLASH, PROTRUSIONS OR GATE BURRS SHALL NOT EXCEED 0.006" (0.152mm) PER SIDE

** DIMENSION DOES NOT INCLUDE INTERLEAD FLASH OR PROTRUSIONS. INTERLEAD FLASH OR PROTRUSIONS SHALL NOT EXCEED 0.006" (0.152mm) PER SIDE

MSOP (MS8) 1197

S8 Package
8-Lead Plastic Small Outline (Narrow 0.150)
(LTC DWG # 05-08-1610)

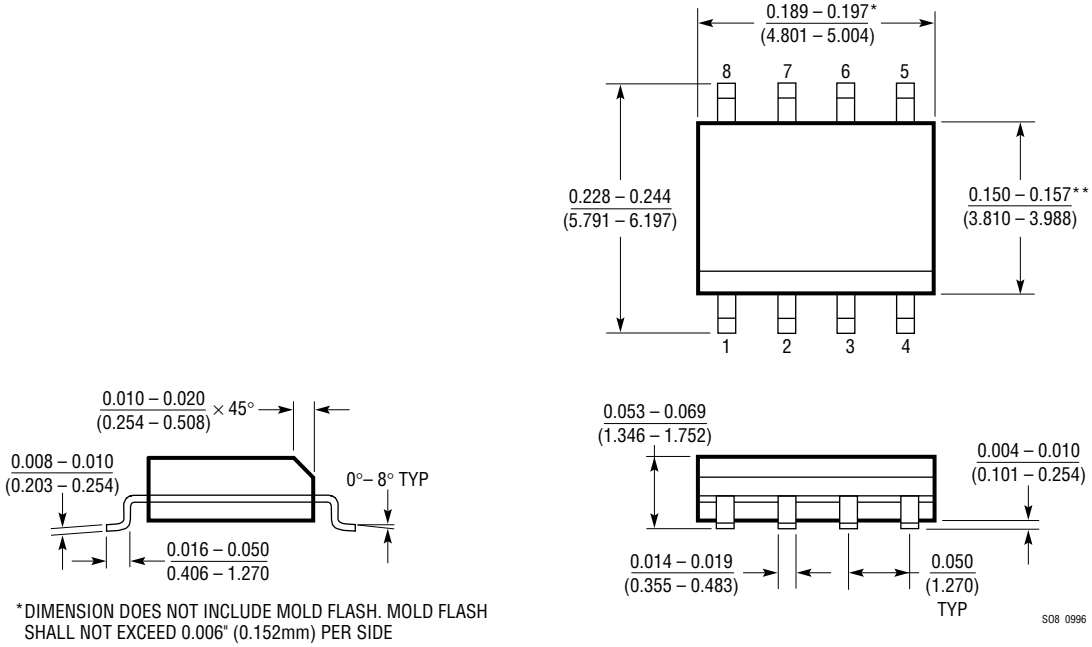

*DIMENSION DOES NOT INCLUDE MOLD FLASH. MOLD FLASH SHALL NOT EXCEED 0.006" (0.152mm) PER SIDE

**DIMENSION DOES NOT INCLUDE INTERLEAD FLASH. INTERLEAD FLASH SHALL NOT EXCEED 0.010" (0.254mm) PER SIDE

SO8 0996

Information furnished by Linear Technology Corporation is believed to be accurate and reliable. However, no responsibility is assumed for its use. Linear Technology Corporation makes no representation that the interconnection of circuits as described herein will not infringe on existing patent rights.

TYPICAL APPLICATIONS

Low Profile 2 Cell-to-28V Converter for LCD Bias

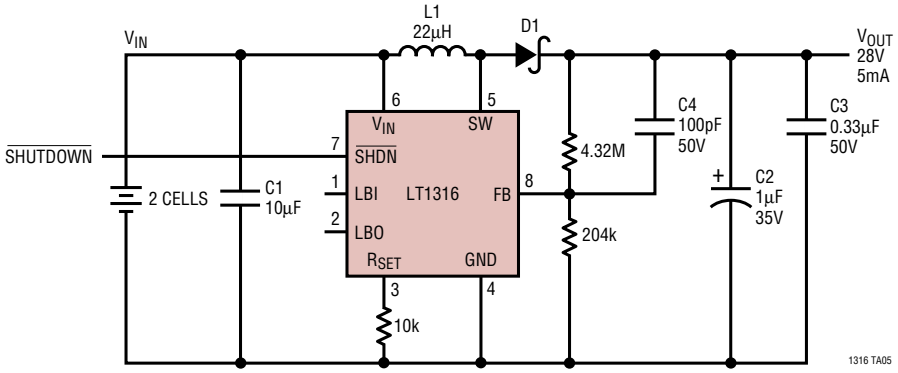

C1: MURATA GRM235Y5V106Z010
C2: SPRAGUE 293D105X9035B2T
C3: 0.33µF CERAMIC, 50V
C4: 100pF CERAMIC, 50V
D1: BAT-54
L1: MURATA LQH3C220K04

Bipolar LCD Bias Supply

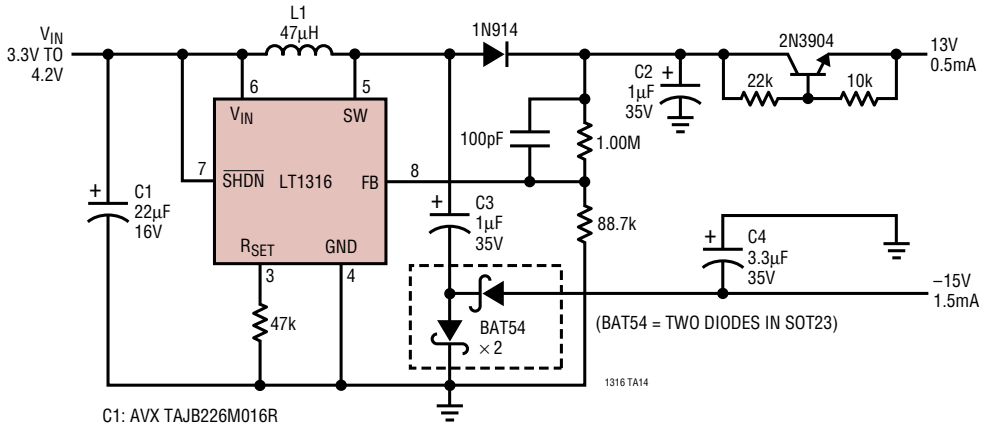

C1: AVX TAJB226M016R
C2, C3: AVX TAJA105K035R
C4: AVX TAJB335M035R
L1: MURATA LQH3C470

RELATED PARTS

PART NUMBER	DESCRIPTION	COMMENTS
LTC®1163	Triple High Side Driver for 2-Cell Inputs	1.8V Minimum Input, Drives N-Channel MOSFETs
LTC1174	Micropower Step-Down DC/DC Converter	94% Efficiency, 130µA I_Q, 9V to 5V at 300mA
LT1302	High Output Current Micropower DC/DC Converter	5V/600mA from 2V, 2A Internal Switch, 200µA I_Q
LT1304	2-Cell Micropower DC/DC Converter	Low-Battery Detector Active in Shutdown, 5V at 200mA for 2 Cells
LT1307	Single Cell Micropower 600kHz PWM DC/DC Converter	3.3V at 75mA from 1 Cell
LTC1440/1/2	Ultralow Power Single/Dual Comparators with Reference	2.8µA I_Q, Adjustable Hysteresis
LTC1516	2-Cell to 5V Regulated Charge Pump	12µA I_Q, No Inductors, 5V at 50mA from 3V Input
LT1521	Micropower Low Dropout Linear Regulator	500mV Dropout, 300mA Current, 12µA I_Q

Linear Technology Corporation
1630 McCarthy Blvd., Milpitas, CA 95035-7417• (408) 432-1900
FAX: (408) 434-0507•TELEX: 499-3977 • www.linear-tech.com
1316f LT/TP 0298 4K • PRINTED IN USA
© LINEAR TECHNOLOGY CORPORATION 1997