Single Cell Micropower 600kHz PWM DC/DC Converters

FEATURES

- Uses Small Ceramic Capacitors
- 50µA Quiescent Current (LT1307)
- 1mA Quiescent Current (LT1307B)
- Operates with V_{IN} as Low as 1V
- 600kHz Fixed Frequency Operation
- Starts into Full Load
- Low Shutdown Current: 3µA
- Low-Battery Detector
- 3.3V at 75mA from a Single Cell
- Automatic Burst Mode™ Operation at Light Load (LT1307)
- Continuous Switching at Light Load (LT1307B)
- Low V_{CESAT} Switch: 295mV at 500mA

APPLICATIONS

- Pagers
- Cordless Telephones
- GPS Receivers
- Battery Backup
- Portable Electronic Equipment
- Glucose Meters
- Diagnostic Medical Instrumentation

DESCRIPTION

The LT®1307/LT1307B are micropower, fixed frequency DC/DC converters that operate from an input voltage as low as 1V. First in the industry to achieve true current mode PWM performance from a single cell supply, the LT1307 features automatic shifting to power saving Burst Mode operation at light loads. High efficiency is maintained over a broad 100µA to 100mA load range. The LT1307B does not shift into Burst Mode operation at light loads, eliminating low frequency output ripple at the expense of light load efficiency. The devices contain a low-battery detector with a 200mV reference and shut down to less than 5µA. No load quiescent current of the LT1307 is 50µA and the internal NPN power switch handles a 500mA current with a voltage drop of just 295mV.

Unlike competitive devices, large electrolytic capacitors are *not required* with the LT1307/LT1307B in single cell applications. The high frequency (600kHz) switching allows the use of tiny surface mount multilayer ceramic (MLC) capacitors along with small surface mount inductors. The devices work with just 10µF of output capacitance and require only 1µF of input bypassing.

The LT1307/LT1307B are available in 8-lead MSOP, PDIP and SO packages.

LT, LTC and LT are registered trademarks of Linear Technology Corporation.
Burst Mode is a trademark of Linear Technology Corporation.

TYPICAL APPLICATION

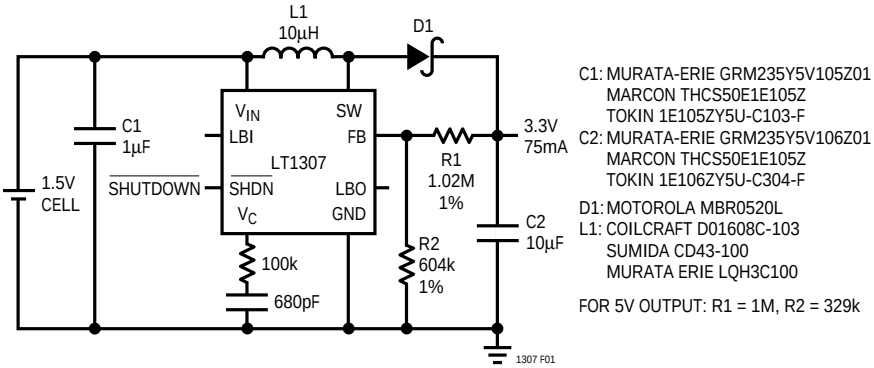

C1: MURATA-ERIE GRM235Y5V105Z01
MARCON THCS50E1E105Z
TOKIN 1E105ZY5U-C103-F
C2: MURATA-ERIE GRM235Y5V106Z01
MARCON THCS50E1E105Z
TOKIN 1E106ZY5U-C304-F
D1: MOTOROLA MBR0520L
L1: COILCRAFT D01608C-103
SUMIDA CD43-100
MURATA ERIE LQH3C100

FOR 5V OUTPUT: R1 = 1M, R2 = 329k

Figure 1. Single Cell to 3.3V Boost Converter

Single Cell to 3.3V Converter Efficiency

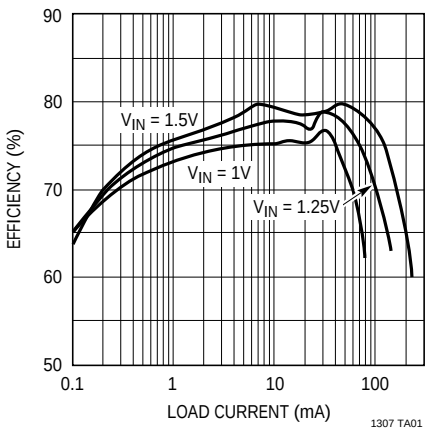

ABSOLUTE MAXIMUM RATINGS

V_{IN}, $\overline{SHDN}$, LBO Voltage 12V
SW Voltage 30V
FB Voltage ..... V_{IN} + 1V
V_C Voltage 2V
LBI Voltage ..... $0V \le V_{LBI} \le 1V$
Current into FB Pin ..... ±1mA

Junction Temperature ..... 125°C
Operating Temperature Range
Commercial (Note 1) ..... –20°C to 70°C
Industrial ..... –40°C to 85°C
Storage Temperature Range ..... –65°C to 150°C
Lead Temperature (Soldering, 10 sec) ..... 300°C

PACKAGE/ORDER INFORMATION

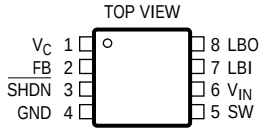

MS8 PACKAGE
8-LEAD PLASTIC MSOP

T_{JMAX} = 125°C, θ_{JA} = 160°C/W

ORDER PART NUMBER
LT1307CMS8 LT1307BCMS8
MS8 PART MARKING
BU BF

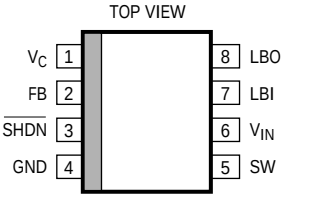

N8 PACKAGE
8-LEAD PDIP

S8 PACKAGE
8-LEAD PLASTIC SO

T_{JMAX} = 125°C, θ_{JA} = 100°C/W (N8)
T_{JMAX} = 125°C, θ_{JA} = 120°C/W (S8)

ORDER PART NUMBER
LT1307CN8 LT1307CS8 LT1307IS8 LT1307BCS8 LT1307BIS8
S8 PART MARKING
1307 1307I 1307B 1307BI

Consult factory for Military grade parts.

ELECTRICAL CHARACTERISTICS

Commercial Grade 0°C to 70°C. V_{IN} = 1.1V, $V_{\overline{SHDN}} = V_{IN}$, T_A = 25°C, LT1307/LT1307B unless otherwise noted.

SYMBOL	PARAMETER	CONDITIONS		MIN	TYP	MAX	UNITS
I_Q	Quiescent Current	Not Switching (LT1307) Not Switching (LT1307B) $V_{\overline{SHDN}}$ = 0V	● ● ●		50 1.0 1	90 1.5 3	µA mA µA
V_{FB}	Feedback Voltage		●	1.20	1.22	1.24	V
I_B	FB Pin Bias Current (Note 2)	$V_{FB} = V_{REF}$	●		27	60	nA
	Reference Line Regulation	$1V \le V_{IN} \le 2V$ (25°C, 0°C) $1V \le V_{IN} \le 2V$ (70°C) $2V \le V_{IN} \le 5V$	 ●		0.6 0.3	1.1 1.5 0.8	%/V %/V %/V
	Minimum Input Voltage				0.92	1	V
	Input Voltage Range		●	1		5	V
g_m	Error Amp Transconductance	ΔI = 5µA	●	25	35	65	µmhos
A_V	Error Amp Voltage Gain	25°C, 0°C 70°C		35 30	100		V/V V/V
f_{OSC}	Switching Frequency		●	550	600	750	kHz

ELECTRICAL CHARACTERISTICS

Commercial Grade 0°C to 70°C. V_{IN} = 1.1V, $V_{\overline{SHDN}} = V_{IN}$, T_A = 25°C unless otherwise noted.

SYMBOL	PARAMETER	CONDITIONS		MIN	TYP	MAX	UNITS
	Maximum Duty Cycle	25°C, 0°C 70°C		80 76	84		% %
	Switch Current Limit (Note 3)	DC = 40% DC = 75%	● ●		0.6 0.5	1.25	A A
	Switch V_{CESAT}	I_{SW} = 500mA (25°C, 0°C) I_{SW} = 500mA (70°C)			295	350 400	mV mV
	Burst Mode Operation Switch Current Limit (LT1307 Only)	L = 10µH L = 22µH			100 50		mA mA
	Shutdown Pin Current	$V_{\overline{SHDN}} = V_{IN}$ $V_{\overline{SHDN}}$ = 0V	● ●		2.5 –1.5	4.0 –2.5	µA µA
	LBI Threshold Voltage		●	190	200	210	mV
	LBO Output Low	I_{SINK} = 10µA	●		0.1	0.25	V
	LBO Leakage Current	V_{LBI} = 250mV, V_{LBO} = 5V	●		0.01	0.1	µA
	LBI Input Bias Current (Note 4)	V_{LBI} = 150mV	●		5	25	nA
	Low-Battery Detector Gain	1MΩ Load (25°C, 0°C) 1MΩ Load (70°C)		1000 500	3000		V/V V/V
	Switch Leakage Current	V_{SW} = 5V	●		0.01	3	µA
	Reverse Battery Current	(Note 5)			750		mA

Commercial Grade T_A = –20°C, V_{IN} = 1.1V, $V_{\overline{SHDN}} = V_{IN}$, unless otherwise noted (Note 1).

SYMBOL	PARAMETER	CONDITIONS	MIN	TYP	MAX	UNITS
I_Q	Quiescent Current	V_{FB} = 1.3V, Not Switching (LT1307) V_{FB} = 1.3V, Not Switching (LT1307B) $V_{\overline{SHDN}}$ = 0V		50 1.1 1	100 1.6 3	µA mA µA
V_{FB}	Feedback Voltage		1.195	1.22	1.245	V
g_m	Error Amp Transconductance	ΔI = 5µA	25	35	65	µmhos
A_V	Error Amp Voltage Gain		35	100		V/V
f_{OSC}	Switching Frequency		500	600	750	kHz
	Maximum Duty Cycle		80	84		%
	Switch V_{CESAT}	I_{SW} = 500mA, V_{IN} = 1.2V		250	350	mV
	Shutdown Pin Current	$V_{\overline{SHDN}} = V_{IN}$ $V_{\overline{SHDN}}$ = 0V		2.5 –1.5	4.0 –2.5	µA µA
	LBI Threshold Voltage		186	200	210	mV

ELECTRICAL CHARACTERISTICS

Industrial Grade –40°C to 85°C. V_{IN} = 1.1V, $V_{\overline{SHDN}} = V_{IN}$, LT1307/LT1307B unless otherwise noted.

SYMBOL	PARAMETER	CONDITIONS		MIN	TYP	MAX	UNITS
I_Q	Quiescent Current	V_{FB} = 1.3V, Not Switching (LT1307)	●		50	100	µA
		V_{FB} = 1.3V, Not Switching (LT1307B)	●		1	1.8	mA
		$V_{\overline{SHDN}}$ = 0V	●		1	3	µA
V_{FB}	Feedback Voltage		●	1.195	1.22	1.245	V
I_B	FB Pin Bias Current (Note 2)	$V_{FB} = V_{REF}$	●	10	27	100	nA
	Reference Line Regulation	1V ≤ V_{IN} ≤ 2V (–40°C)			0.6	1.1	%/V
		1V ≤ V_{IN} ≤ 2V (85°C)				3.2	%/V
		2V ≤ V_{IN} ≤ 5V	●		0.3	0.8	%/V
	Minimum Input Voltage	–40°C			1.1	1.2	V
		85°C			0.8	1.0	V
	Input Voltage Range		●			5	V
g_m	Error Amp Transconductance	ΔI = 5µA	●	25	35	65	µmhos
A_V	Error Amp Voltage Gain	–40°C		35			V/V
		85°C		30			V/V
f_{OSC}	Switching Frequency		●	500	600	750	kHz
	Maximum Duty Cycle	–40°C		80	84		%
		85°C		75	80		%
	Switch Current Limit (Note 3)	DC = 40%	●		0.6	1.25	A
		DC = 75%			0.5		A
	Switch V_{CESAT}	I_{SW} = 500mA, V_{IN} = 1.2V (–40°C)			250	350	mV
		I_{SW} = 500mA (85°C)			330	400	mV
	Burst Mode Operation Switch Current Limit (LT1307 Only)	L = 10µH			100		mA
		L = 22µH			50		mA
	Shutdown Pin Current	$V_{\overline{SHDN}} = V_{IN}$	●		2.5	4.0	µA
		$V_{\overline{SHDN}}$ = 0V	●		–1.5	–2.5	µA
	LBI Threshold Voltage		●	186	200	210	mV
	LBO Output Low	I_{SINK} = 10µA	●		0.1	0.25	V
	LBO Leakage Current	V_{LBI} = 250mV, V_{LBO} = 5V	●		0.1	0.3	µA
	LBI Input Bias Current (Note 4)	V_{LBI} = 150mV	●		5	30	nA
	Low-Battery Detector Gain	1MΩ Load (–40°C)		1000	6000		V/V
		1MΩ Load (85°C)		400			V/V
	Switch Leakage Current	V_{SW} = 5V	●		0.01	3	µA

The ● denotes specifications which apply over the full operating temperature range.

Note 1: Specifications for commercial (C) grade devices are guaranteed but not tested at –20°C. MS8 package devices are designed for and intended to meet commercial temperature range specifications but are not tested at –20°C or 0°C.

Note 2: Bias current flows into FB pin.

Note 3: Switch current limit guaranteed by design and/or correlation to static tests. Duty cycle affects current limit due to ramp generator.

Note 4: Bias current flows out of LBI pin.

Note 5: The LT1307 will withstand continuous application of 1.6V applied to the GND pin while V_{IN} and SW are grounded.

TYPICAL PERFORMANCE CHARACTERISTICS

5V Output Efficiency, Circuit of Figure 1 (LT1307)

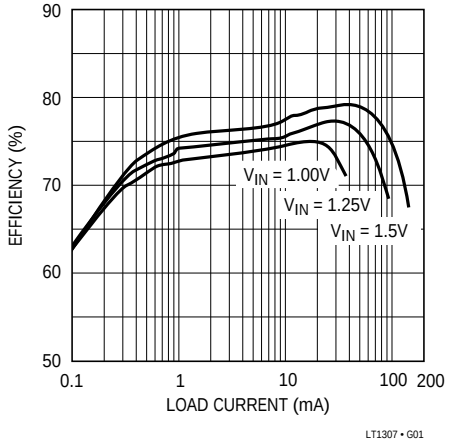

3.3V Output Efficiency, Circuit of Figure 1 (LT1307B)

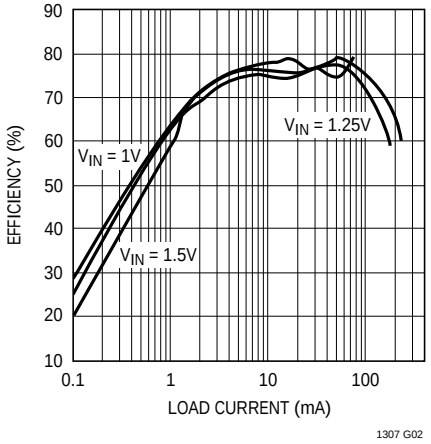

5V Output Efficiency, Circuit of Figure 1 (LT1307B)

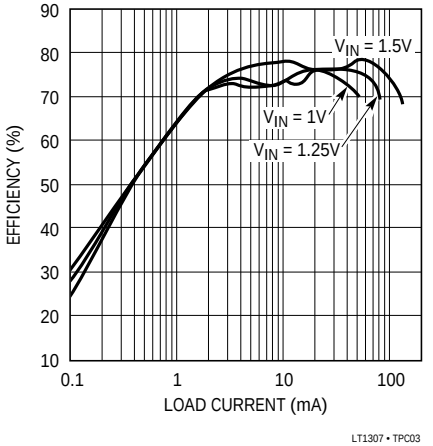

Quiescent Current vs Temperature

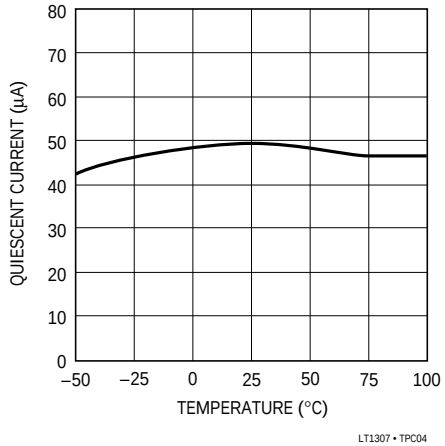

Feedback Bias Current vs Temperature

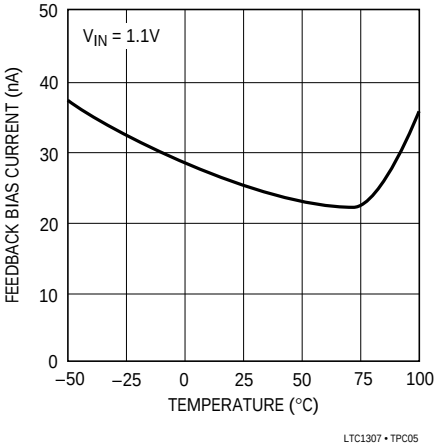

LBI Bias Current vs Temperature

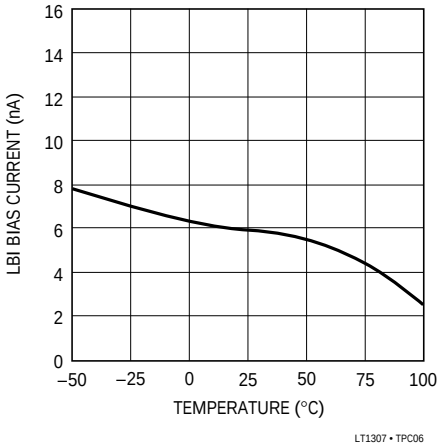

Quiescent Current in Shutdown

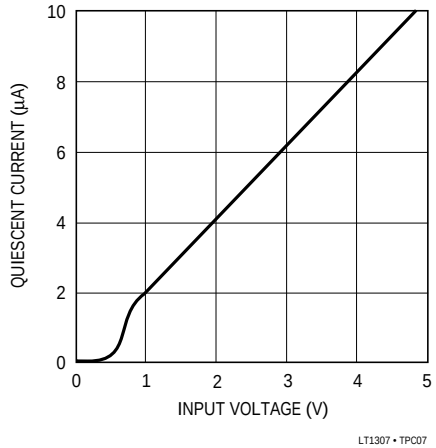

Shutdown Pin Bias Current vs Input Voltage

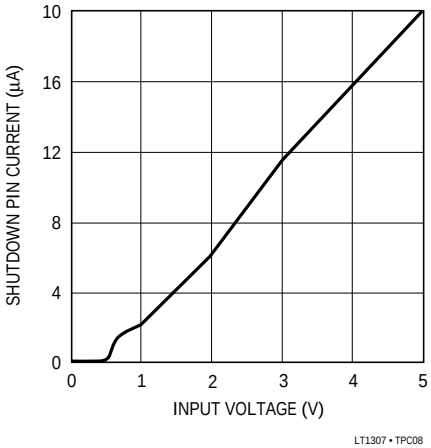

Switch V_{CESAT} vs Current

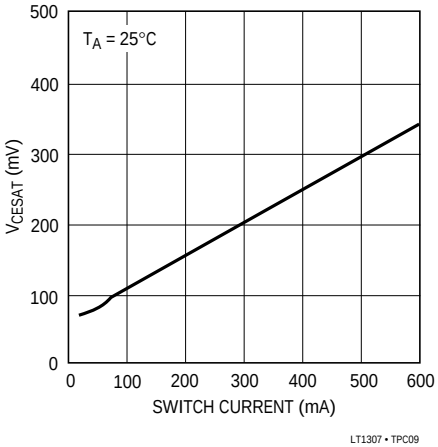

TYPICAL PERFORMANCE CHARACTERISTICS

Feedback Voltage vs Temperature

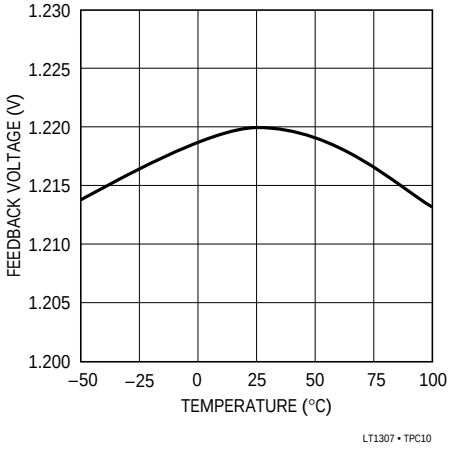

LT1307 • TPC10

LBI Reference vs Temperature

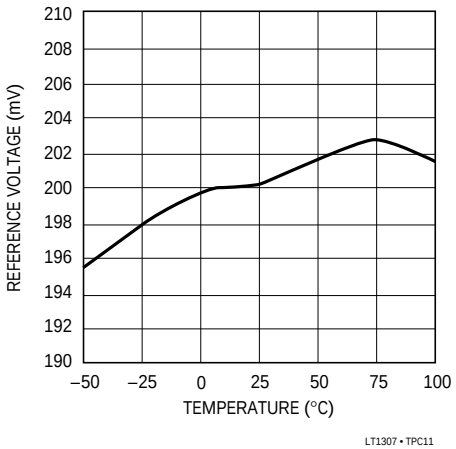

LT1307 • TPC11

Oscillator Frequency vs Input Voltage

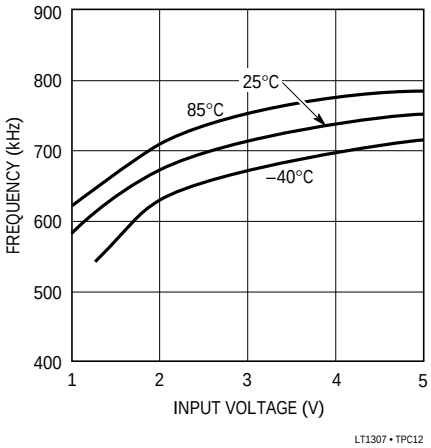

LT1307 • TPC12

Transient Response (LT1307)

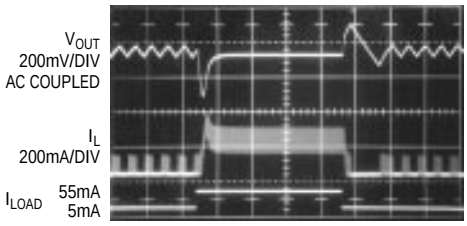

V_{IN} = 1.25V 500µs/DIV
V_{OUT} = 3.3V

1307 G13

Transient Response (LT1307B)

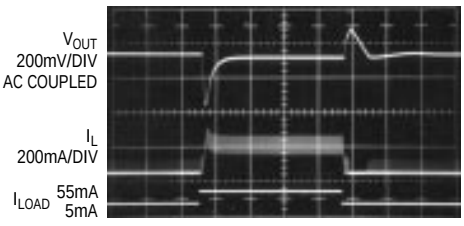

V_{IN} = 1.25V 500µs/DIV
V_{OUT} = 3.3V

1307 G14

Load Regulation (LT1307)

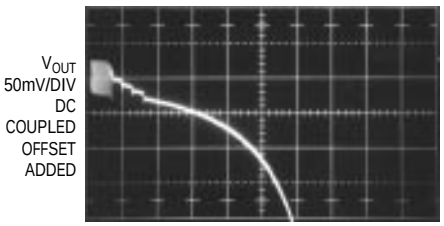

V_{IN} = 0.92V I_{LOAD} 10mA/DIV
V_{OUT} = 3.3V

1307 G15

Load Regulation (LT1307)

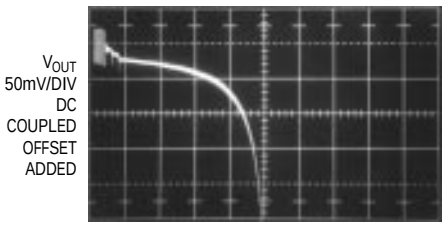

V_{IN} = 1V I_{LOAD} 20mA/DIV
V_{OUT} = 3.3V

1307 G16

Load Regulation (LT1307)

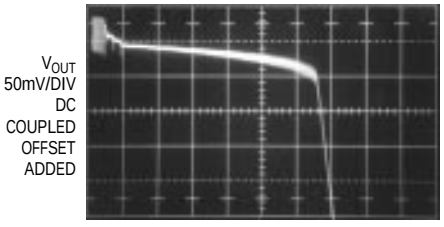

V_{IN} = 1.15V I_{LOAD} 20mA/DIV
V_{OUT} = 3.3V

1307 G17

Load Regulation (LT1307)

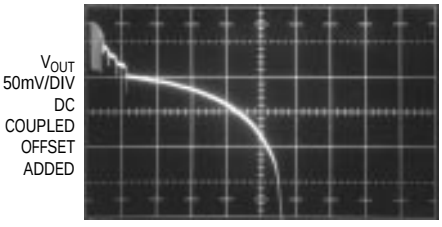

V_{IN} = 1V I_{LOAD} 10mA/DIV
V_{OUT} = 5V

1307 G18

Load Regulation (LT1307)

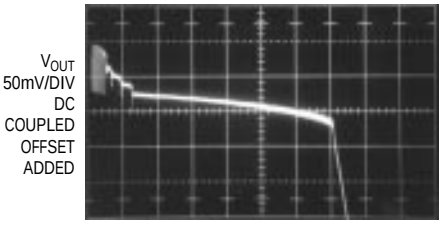

V_{IN} = 1.15V I_{LOAD} 10mA/DIV
V_{OUT} = 5V

1307 G19

Circuit Operation, L = 10µH (LT1307)

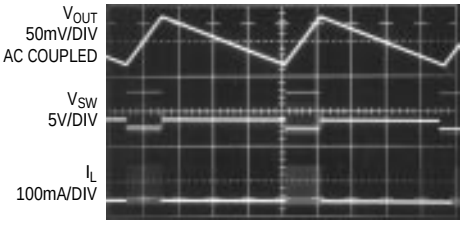

V_{IN} = 1.25V 100µs/DIV
V_{OUT} = 5V
I_{LOAD} = 1.5mA

1307 G20

Circuit Operation, L = 22µH (LT1307)

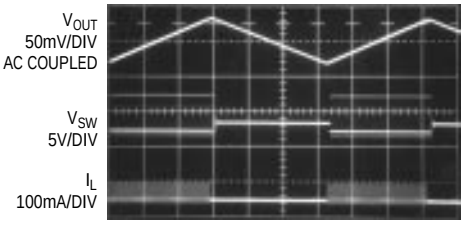

V_{IN} = 1.25V 100µs/DIV
V_{OUT} = 5V
I_{LOAD} = 1.5mA

1307 G21

PIN FUNCTIONS

V_C (Pin 1): Compensation Pin for Error Amplifier. Connect a series RC from this pin to ground. Typical values are 100kΩ and 680pF. Minimize trace area at V_C.

FB (Pin 2): Feedback Pin. Reference voltage is 1.22V. Connect resistor divider tap here. Minimize trace area at FB. Set V_{OUT} according to: $V_{OUT} = 1.22V(1 + R1/R2)$.

$\overline{SHDN}$ (Pin 3): Shutdown. Ground this pin to turn off switcher. Must be tied to V_{IN} (or higher voltage) to enable switcher. Do not float the $\overline{SHDN}$ pin.

GND (Pin 4): Ground. Connect directly to local ground plane.

SW (Pin 5): Switch Pin. Connect inductor/diode here. Minimize trace area at this pin to keep EMI down.

V_{IN} (Pin 6): Supply Pin. Must have 1µF ceramic bypass capacitor right at the pin, connected directly to ground.

LBI (Pin 7): Low-Battery Detector Input. 200mV reference. Voltage on LBI must stay between ground and 700mV.

LBO (Pin 8): Low-Battery Detector Output. Open collector, can sink 10µA. A 1MΩ pull-up is recommended.

BLOCK DIAGRAM

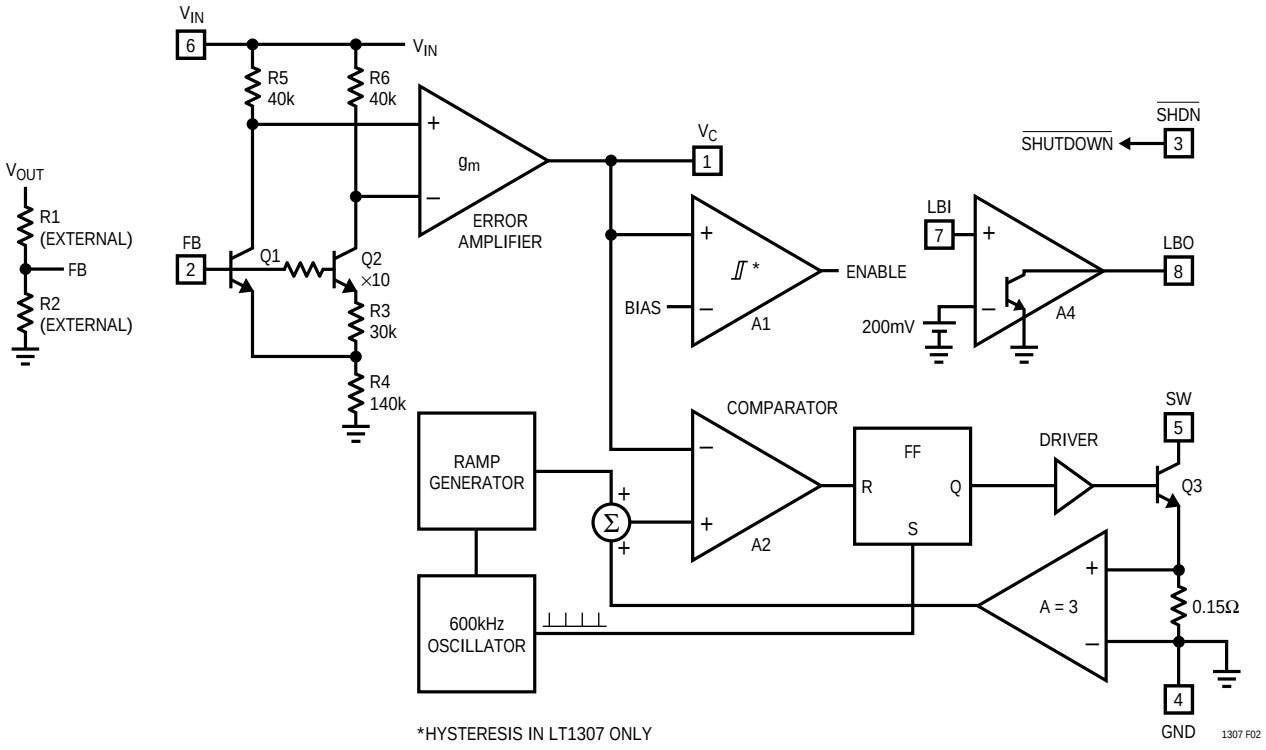

Figure 2. LT1307/LT1307B Block Diagram

APPLICATIONS INFORMATION

OPERATION

The LT1307 combines a current mode, fixed frequency PWM architecture with Burst Mode micropower operation to maintain high efficiency at light loads. Operation can best be understood by referring to the block diagram in Figure 2. Q1 and Q2 form a bandgap reference core whose loop is closed around the output of the converter. When V_{IN} is 1V, the feedback voltage of 1.22V, along with an 80mV drop across R5 and R6, forward biases Q1 and Q2's base collector junctions to 300mV. Because this is not enough to saturate either transistor, FB can be at a higher voltage than V_{IN}. When there is no load, FB rises slightly above 1.22V, causing V_C (the error amplifier's output) to decrease. When V_C reaches the bias voltage on hysteretic comparator A1, A1's output goes low, turning off all circuitry except the input stage, error amplifier and low-battery detector. Total current consumption in this state is 50µA. As output loading causes the FB voltage to decrease, A1's output goes high, enabling the rest of the IC. Switch current is limited to approximately 100mA initially after A1's output goes high. If the load is light, the output voltage (and FB voltage) will increase until A1's output goes low, turning off the rest of the LT1307. Low frequency ripple voltage appears at the output. The ripple frequency is dependent on load current and output capacitance. This Burst Mode operation keeps the output regulated and reduces average current into the IC, resulting in high efficiency even at load currents of 100µA or less.

If the output load increases sufficiently, A1's output remains high, resulting in continuous operation. When the LT1307 is running continuously, peak switch current is controlled by V_C to regulate the output voltage. The switch is turned on at the beginning of each switch cycle. When the summation of a signal representing switch current and a ramp generator (introduced to avoid subharmonic oscillations at duty factors greater than 50%) exceeds the V_C signal, comparator A2 changes state, resetting the flip-flop and turning off the switch. Output voltage increases as switch current is increased. The output, attenuated by a resistor divider, appears at the FB pin, closing the overall loop. Frequency compensation is provided by an external series RC network connected between the V_C pin and ground. Low-battery detector A4's open collector output (LBO) pulls low when the LBI pin voltage drops below 200mV. There is no hysteresis in A4, allowing it to be used as an amplifier in some applications. The entire device is disabled when the $\overline{SHDN}$ pin is brought low. To enable the converter, $\overline{SHDN}$ must be at V_{IN} or at a higher voltage.

The LT1307B differs from the LT1307 in that there is no hysteresis in comparator A1. Also, the bias point on A1 is set lower than on the LT1307 so that switching can occur at inductor current less than 100mA. Because A1 has no hysteresis, there is no Burst Mode operation at light loads and the device continues switching at constant frequency. This results in the absence of low frequency output voltage ripple at the expense of efficiency.

The difference between the two devices is clearly illustrated in Figures 3 and 4. The top two traces in Figure 3 show an LT1307/LT1307B circuit, using the components indicated in Figure 1, set to a 5V output. Input voltage is 1.25V. Load current is stepped from 1mA to 41mA for both circuits. Low frequency Burst Mode operation voltage ripple is observed on Trace A, while none is observed on

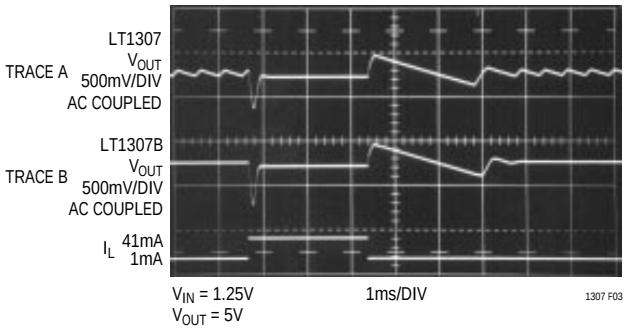

Figure 3. LT1307 Exhibits Burst Mode Operation Ripple at 1mA Load, LT1307B Does Not

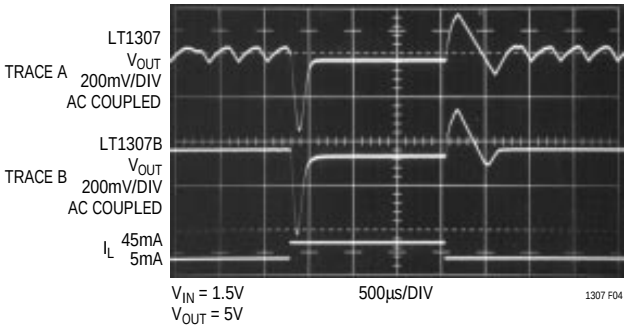

Figure 4. At Higher Loading and a 1.5V Supply, LT1307 Again Exhibits Burst Mode Operation Ripple at 5mA Load, LT1307B Does Not

APPLICATIONS INFORMATION

Trace B. Similarly, Figure 4 details the two circuits with a load step from 5mA to 45mA with a 1.5V input.

The LT1307B also can be used in lower current applications where a clean, low ripple output is needed. Figure 5 details transient response of a single cell to 3.3V converter, using an inductor value of 100µH. This high inductance minimizes ripple current, allowing the LT1307B to regulate without skipping cycles. As the load current is stepped from 5mA to 10mA, the output voltage responds cleanly. Note that the V_C pin loop compensation has been made more conservative (increased C, decreased R).

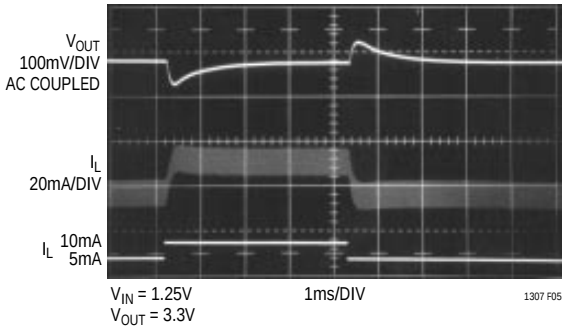

Figure 5. Increasing L to 100µH, Along with R_C = 36k, C_C = 20nF and C_{OUT} = 10µF, Low Noise Performance of LT1307B Can Be Realized at Light Loads of 5mA to 10mA

At light loads, the LT1307B will begin to skip alternate cycles. The load point at which this occurs can be decreased by increasing the inductor value. However, output ripple will continue to be significantly less than the LT1307 output ripple. Further, the LT1307B can be forced into micropower mode, where I_Q falls from 1mA to 50µA by pulling down V_C to 0.3V or less externally.

DC/DC CONVERTER NOISE CONSIDERATIONS

Switching regulator noise is a significant concern in many communications systems. The LT1307 is designed to keep noise energy out of the sensitive 455kHz band at all load levels while consuming only 60µW to 100µW at no load. At light load levels, the device is in Burst Mode, causing low frequency ripple to appear at the output. Figure 6 details spectral noise directly at the output of Figure 1's circuit in a 1kHz to 1MHz bandwidth. The converter supplies a 5mA load from a 1.25V input. The Burst Mode fundamental at 5.1kHz and its harmonics are quite evident, as is this particular device's 575kHz switching frequency (nominal switching frequency is 600kHz). Note, however, the absence of significant energy at 455kHz. Figure 7's plot reduces the frequency span from 255kHz to 655kHz with a 455kHz center. Burst Mode low frequency ripple creates sidebands around the 575kHz switching fundamental. These sidebands have low signal amplitude at 455kHz, measuring –55dBmV_{RMS}. As load current is further reduced, the Burst Mode frequency decreases. This spaces the sidebands around the switching frequency closer together, moving spectral energy further

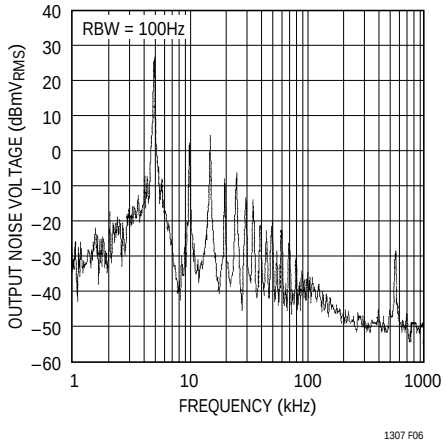

Figure 6. Spectral Noise Plot of 3.3V Converter Delivering 5mA Load. Burst Mode Fundamental at 5.1kHz is 23dBmV_{RMS} or 14mV_{RMS}

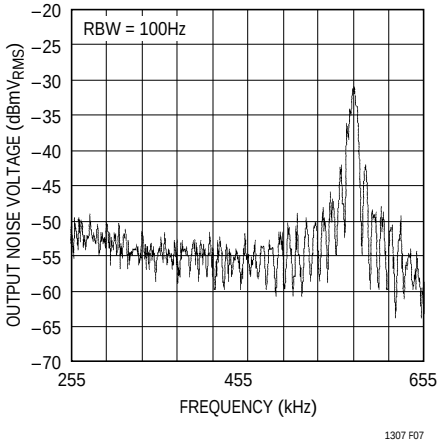

Figure 7. Span Centered at 455kHz Shows –55dBmV_{RMS} (1.8µV_{RMS}) at 455kHz. Burst Mode Creates Sidebands 5.1kHz Apart Around the Switching Frequency Fundamental of 575kHz

APPLICATIONS INFORMATION

away from 455kHz. Figure 8 shows the noise spectrum of the converter with the load increased to 20mA. The LT1307 shifts out of Burst Mode operation, eliminating low frequency ripple. Spectral energy is present only at the switching fundamental and its harmonics. Noise voltage measures –5dBmV_{RMS} or 560µV_{RMS} at the 575kHz switching frequency, and is below –60dBmV_{RMS} for all other frequencies in the range. By combining Burst Mode with fixed frequency operation, the LT1307 keeps noise away from 455kHz.

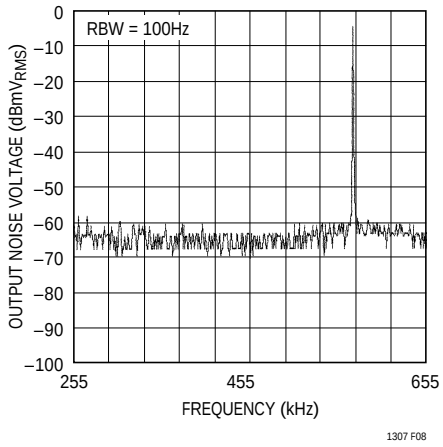

Figure 8. With Converter Delivering 20mA, Low Frequency Sidebands Disappear. Noise is Present Only at the 575kHz Switching Frequency

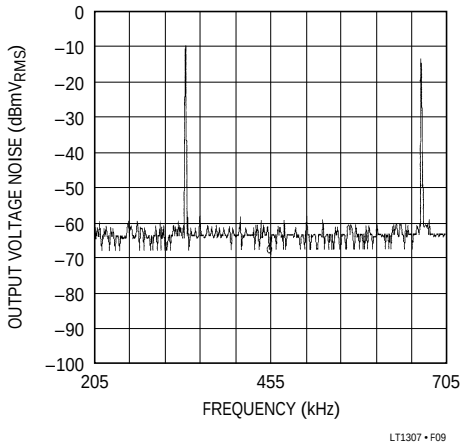

Figure 9. LT1307B at 5mA Load Shows No Audio Components or Sidebands About Switching Frequency, 333kHz Fundamental Amplitude is –10dBmV, or 316µV_{RMS}

To eliminate the low frequency noise of Figure 6, the LT1307 can be replaced with the LT1307B. Figure 9 details the spectral noise at the output of Figure 1's circuit using an LT1307B at 5mA load. Although spectral energy is present at 333kHz due to alternate pulse skipping, all Burst Mode operation spectral components are gone. Alternate pulse skipping can be eliminated by increasing inductance.

FREQUENCY COMPENSATION

Obtaining proper values for the frequency compensation network is largely an empirical, iterative procedure, since variations in input and output voltage, topology, capacitor value and ESR, and inductance make a simple formula elusive. As an example, consider the case of a 1.25V to 3.3V boost converter supplying 50mA. To determine optimum compensation, the circuit is built and a transient load is applied to the circuit. Figure 10 shows the setup.

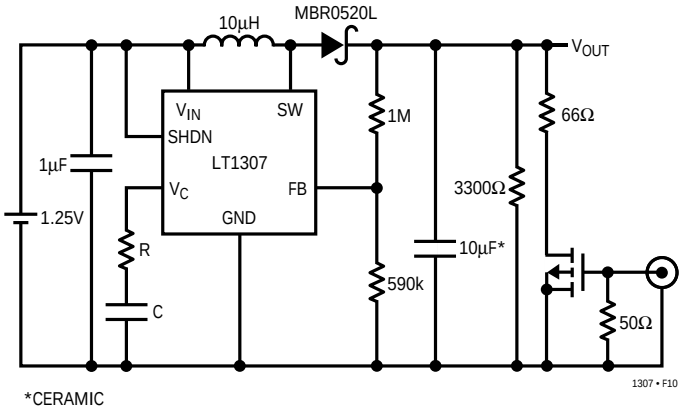

Figure 10. Boost Converter with Simulated Load

Figure 11a details transient response without compensation components. Although the output ripple voltage at a 1mA load is low, allowing the error amplifier to operate wideband results in excessive ripple at a 50mA load. Some kind of loop stabilizing network is obviously required. A 100k/22nF series RC is connected to the V_C pin, resulting in the response pictured in Figure 11b. The output settles in about 7ms to 8ms. This may be acceptable, but we can do better. Reducing C to 2nF gives Figure 11c's response. This is clearly in the right direction. After another order of magnitude reduction, Figure 11d's response shows some

APPLICATIONS INFORMATION

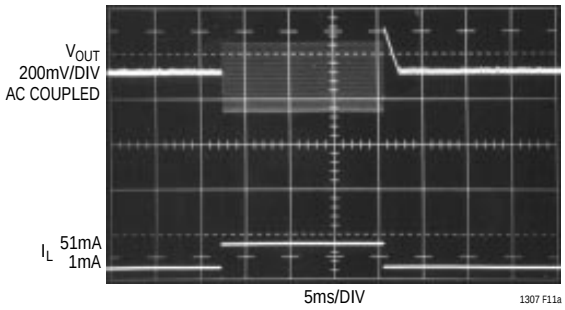

Figure 11a. V_C Pin Left Unconnected. Output Ripple Voltage is 300mV_{P-P} Under Load

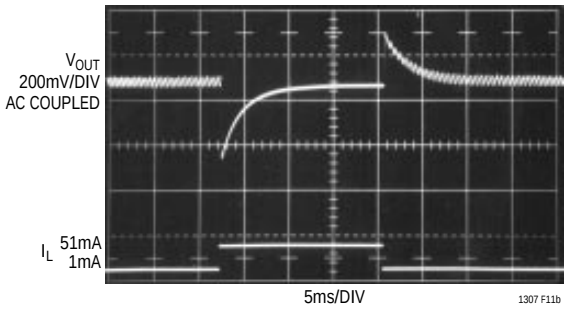

Figure 11b. Inclusion of a 100k/22nF Series RC on V_C Pin Results in Overdamped Stable Response

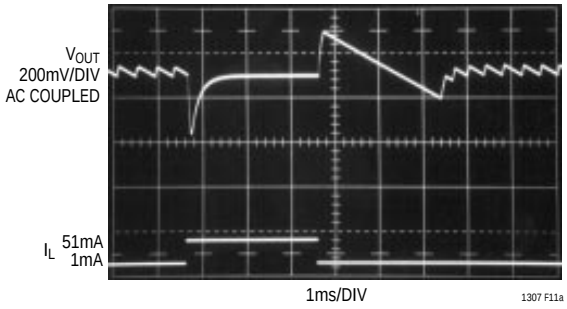

Figure 11c. Reducing C to 2nF Speeds Up Response, Although Still Overdamped

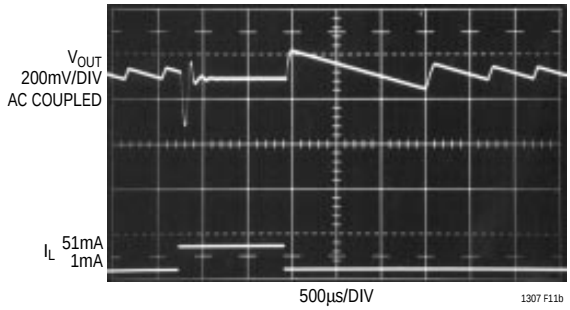

Figure 11d. A 100k/200pF Series RC Shows Some Underdamping

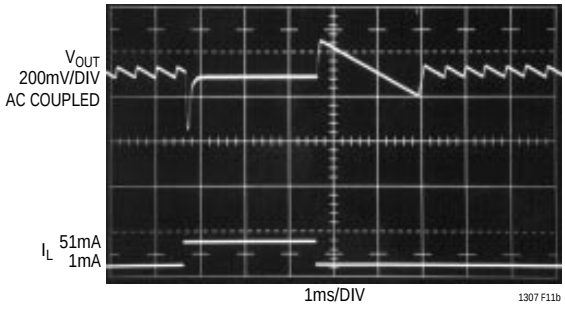

Figure 11e. A 100k/680pF RC Provides Optimum Settling Time with No Ringing

underdamping. Now settling time is about 300µs. Increasing C to 680pF results in the response shown in Figure 11e. This response has minimum settling time with no overshoot or underdamping.

Converters using a 2-cell input need more capacitance at the output. This added capacitance moves in the output pole, requiring added C at the V_C pin network to prevent loop oscillation.

Observant readers will notice R has been set to 100k for all the photos in Figure 11. Usable R values can be found in the 10k to 500k range, but after too many trips to the resistor bins, 100k wins.

APPLICATIONS INFORMATION

LAYOUT HINTS

The LT1307 switches current at high speed, mandating careful attention to layout for proper performance. *You will not get advertised performance with careless layouts.* Figure 12 shows recommended component placement. Follow this closely in your PC layout. Note the direct path of the switching loops. Input capacitor C_{IN} *must* be placed close (<5mm) to the IC package. As little as 10mm of wire or PC trace from C_{IN} to V_{IN} will cause problems such as inability to regulate or oscillation. A 1µF ceramic bypass capacitor is the only input capacitance required *provided the battery has a low inductance path to the circuit.* The battery itself provides the bulk capacitance the device requires for proper operation. If the battery is located some distance from the circuit, an additional input capacitor may be required. A 100µF aluminum electrolytic unit works well in these cases. This capacitor need not have low ESR.

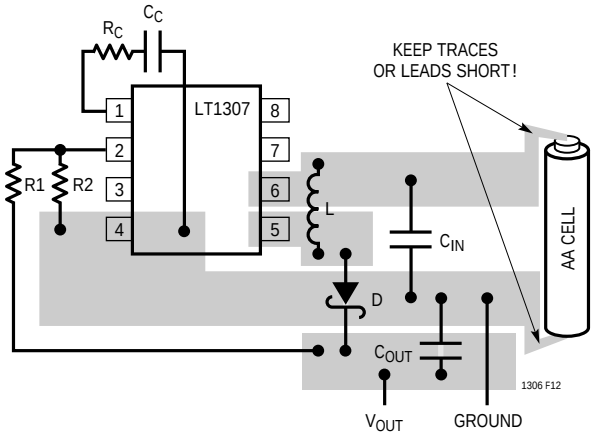

Figure 12. Recommended Component Placement. Traces Carrying High Current Are Direct. Trace Area at FB Pin and V_C Pin is Kept Low. Lead Length to Battery Should Be Kept Short

OPERATION FROM A LABORATORY POWER SUPPLY

If a lab supply is used, the leads used to connect the circuit to the supply can have significant inductance at the LT1307's switching frequency. As in the previous situation, an electrolytic capacitor may be required at the circuit in order to reduce the AC impedance of the input sufficiently. An alternative solution would be to attach the circuit directly to the power supply at the supply terminals, without the use of leads. The power supply's output capacitance will then provide the bulk capacitance the LT1307 circuit requires.

COMPONENT SELECTION

Inductors

Inductors appropriate for use with the LT1307 must possess three attributes. First, they must have low core loss at 600kHz. Most ferrite core units have acceptable losses at this switching frequency. Inexpensive iron powder cores should be viewed suspiciously, as core losses can cause significant efficiency penalties at 600kHz. Second, the inductor must handle current of 500mA without saturating. This places a lower limit on the physical size of the unit. Molded chokes or chip inductors usually do not have enough core to support 500mA current and are unsuitable for the application. Lastly, the inductor should have low DCR (copper wire resistance) to prevent efficiency-killing I^2R losses. Linear Technology has identified several inductors suitable for use with the LT1307. This is not an exclusive list. There are many magnetics vendors whose components are suitable for use. A few vendor's components are listed in Table 1.

Table 1. Inductors Suitable for Use with the LT1307

PART	VALUE	MAX DCR	MFR	HEIGHT (mm)	COMMENT
LQH3C100	10µH	0.57	Murata-Erie	2.0	Smallest Size
DO1608-103	10µH	0.16	Coilcraft	3.0	
CD43-100	10µH	0.18	Sumida	3.2	
CD54-100	10µH	0.10	Sumida	4.5	Best Efficiency
CTX32CT-100	10µH	0.50	Coiltronics	2.2	1210 Footprint

Capacitors

For single cell applications, a 10µF ceramic output capacitor is generally all that is required. Ripple voltage in Burst Mode can be reduced by increasing output capacitance. For 2- and 3-cell applications, more than 10µF is needed. For a typical 2-cell to 5V application, a 47µF to 100µF low ESR tantalum capacitor works well. AVX TPS series (100% surge tested) or Sprague (don't be vague—ask for Sprague) 594D series are both good choices for low ESR capacitors. Alternatively, a 10µF ceramic in parallel with a low cost (read high ESR) electrolytic capacitor, either tantalum or aluminum, can be used instead. For through hole applica-

APPLICATIONS INFORMATION

tions where small size is not critical, Panasonic HFQ series aluminum electrolytic capacitors have been found to perform well.

Table 2. Vendor Telephone Numbers

VENDOR	COMPONENTS	TELEPHONE
Coilcraft	Inductors	(708) 639-6400
Marcon	Capacitors	(708) 913-9980
Murata-Erie	Inductors, Capacitors	(404) 436-1300
Sumida	Inductors	(847) 956-0666
Tokin	Capacitors	(408) 432-8020
AVX	Capacitors	(207) 282-5111
Sprague	Capacitors	(603) 224-1961
Coiltronics	Inductors	(407) 241-7876

Diodes

Most of the application circuits on this data sheet specify the Motorola MBR0520L surface mount Schottky diode. This 0.5A, low drop diode complements the LT1307 quite well. In lower current applications, a 1N4148 can be used, although efficiency will suffer due to the higher forward drop. This effect is particularly noticeable at low output voltages. For higher voltage output applications, such as LCD bias generators, the extra drop is a small percentage of the output voltage so the efficiency penalty is small. The low cost of the 1N4148 makes it attractive wherever it can be used. In through hole applications the 1N5818 is the all around best choice.

SHUTDOWN PIN

The LT1307 has a Shutdown pin ($\overline{SHDN}$) that must be grounded to shut the device down or tied to a voltage equal or greater than V_{IN} to operate. The shutdown circuit is shown in Figure 13.

Note that allowing $\overline{SHDN}$ to float turns on both the start-up current (Q2) and the shutdown current (Q3) for $V_{IN} > 2V_{BE}$. The LT1307 doesn't know what to do in this situation and behaves erratically. $\overline{SHDN}$ voltage above V_{IN} is allowed. This merely reverse-biases Q3's base emitter junction, a benign condition.

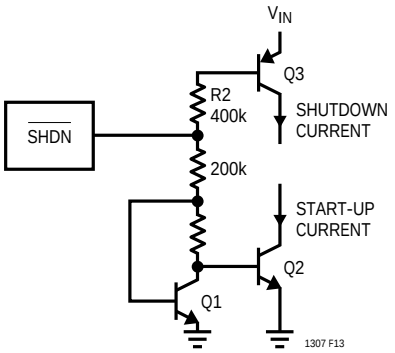

Figure 13. Shutdown Circuit

LOW-BATTERY DETECTOR

The LT1307's low-battery detector is a simple PNP input gain stage with an open collector NPN output. The negative input of the gain stage is tied internally to a 200mV ±5% reference. The positive input is the LBI pin. Arrangement as a low-battery detector is straightforward. Figure 14 details hookup. R1 and R2 need only be low enough in value so that the bias current of the LBI pin doesn't cause large errors. For R2, 100k is adequate. The 200mV reference can also be accessed as shown in Figure 15.

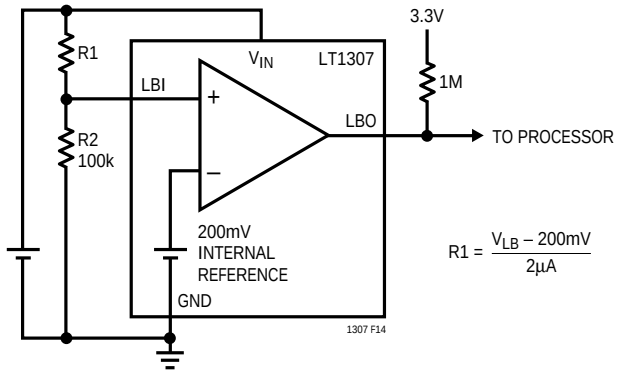

Figure 14. Setting Low-Battery Detector Trip Point

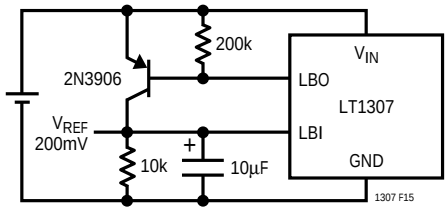

Figure 15. Accessing 200mV Reference

APPLICATIONS INFORMATION

REVERSE BATTERY CONSIDERATIONS

The LT1307 is built on a junction-isolated bipolar process. The p-type substrate is connected to the GND pin of the LT1307. Substrate diodes, normally reverse-biased, are present on the SW pin and the V_{IN} pin as shown in Figure 16. When the battery polarity is reversed, these diodes conduct, as illustrated in Figure 17. With a single AA or AAA cell, several hundred milliamperes flow in the circuit. The LT1307 can withstand this current without damage. In laboratory tests, the LT1307 performed without degradation after sustaining polarity reversal for the life of a single AA alkaline cell.

When using a 2- or 3-cell supply, an external protection diode is recommended as shown in Figure 18. When the battery polarity is reversed, the 1N4001 conducts, limiting reverse voltage across the LT1307 to a single diode drop. This arrangement will quickly deplete the cells' energy, but it does prevent the LT1307 from excessive power dissipation and potential damage.

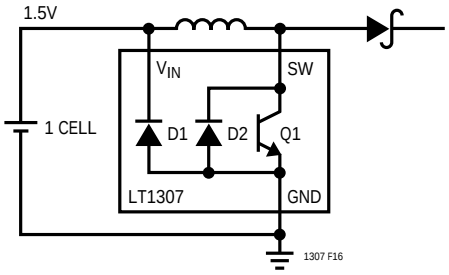

Figure 16. LT1307 Showing Internal Substrate Diodes D1 and D2. In Normal Operation Diodes are Reverse-Biased

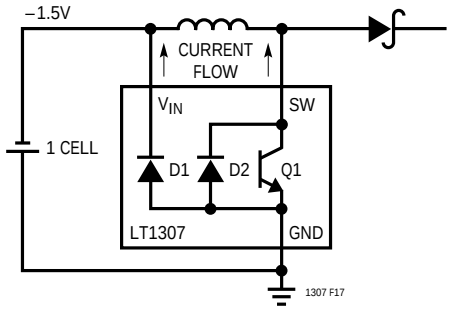

Figure 17. When Cell Is Reversed Current Flows through D1 and D2

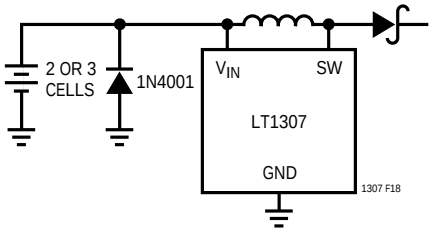

Figure 18. 1N4001 Diode Protects LT1307 from Excessive Power Dissipation When a 2- or 3-Cell Battery is Used

TYPICAL APPLICATIONS

Externally Controlled Burst Mode Operation

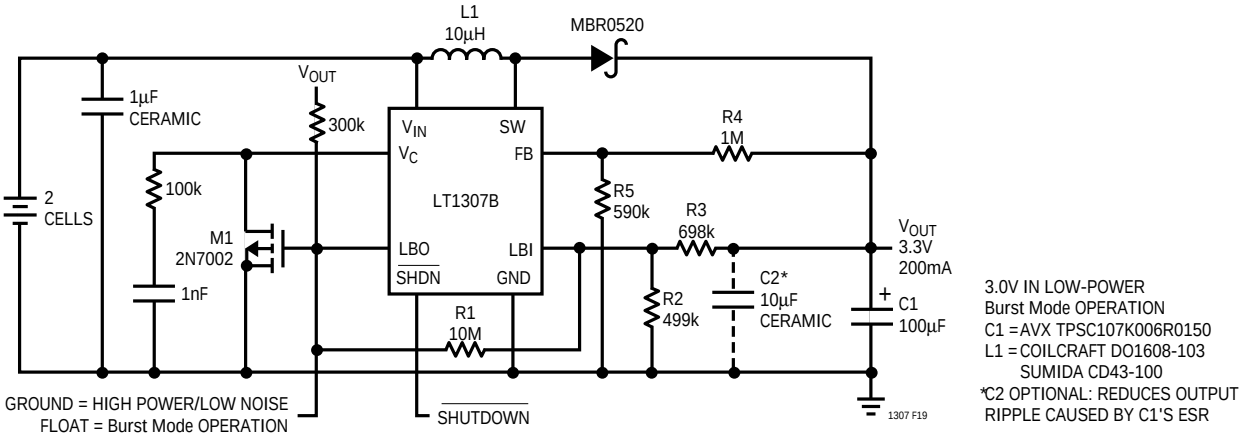

This circuit overcomes the limitation of load-based transitioning between Burst Mode operation and constant switching mode by adding external control. If M1's gate is grounded by an external open-drain signal, the converter functions normally in constant switching mode, delivering 3.3V. Output noise is low, however efficiency at loads less than 1mA is poor due to the 1mA supply current of the LT1307B. If M1's gate is allowed to float, the low-battery detector now drives the V_C pin. R3 and R2 set the output to 3V by allowing M1's gate to go to V_{OUT} until the output voltage drops below 3V. R1 adds hysteresis, resulting in low-frequency Burst Mode operation ripple voltage at the output. By pulling the V_C pin below a V_{BE}, quiescent current of the LT1307B drops to 60µA, resulting in acceptable efficiency at loads in the 100µA range.

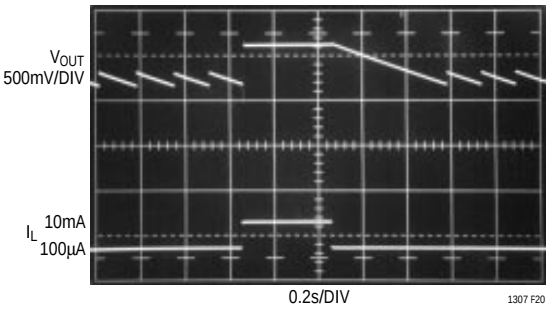

This photo details output voltage as the circuit is switched between the two modes. Load current is 100µA in Burst Mode operation; 10mA in constant switching mode.

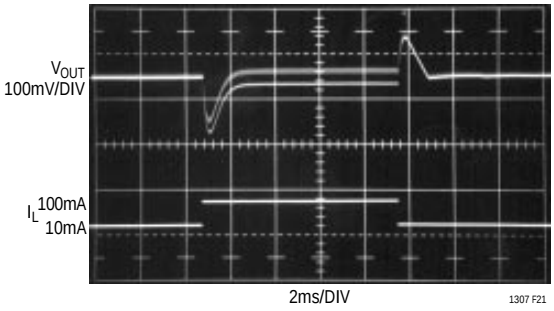

This photo shows transient response in constant switching mode with a 10mA to 100mA stepped load. Output ripple at the switching frequency can be reduced considerably by adding a 10µF ceramic capacitor in parallel with the 100µF tantalum.

TYPICAL APPLICATIONS

Low Cost 2-Cell to 5V

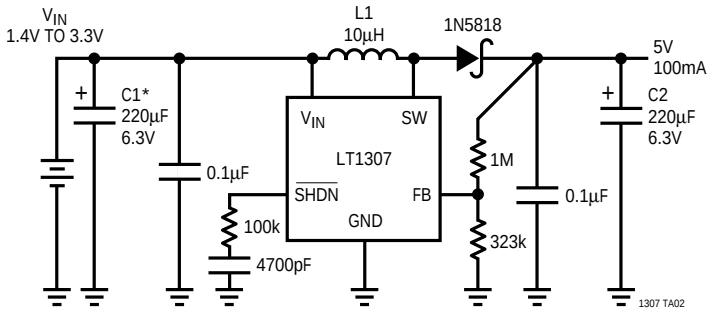

C1, C2: PANASONIC ECA0JFQ221
(DIGI-KEY P5604-ND)
L1: SUMIDA CD43-100

Step-Up/Step-Down Converter

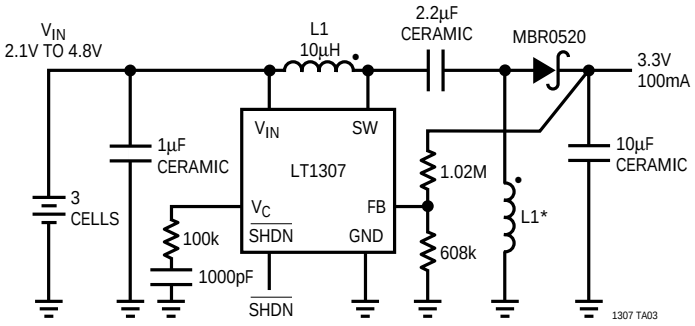

L1: COILTRONICS CTX10-1 OR 2 MURATA ERIE LQH3C100
EFFICIENCY ≈70% TO 73%

Constant Current NiCd Battery Charger with Overvoltage Protection
for Acknowledge-Back Pagers

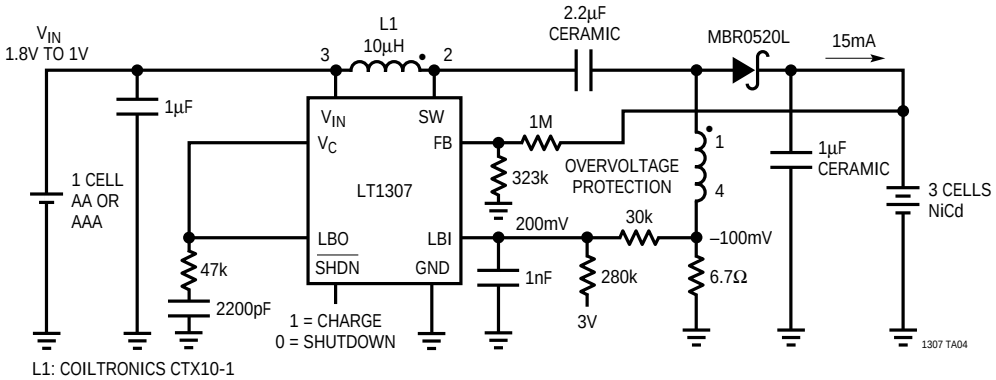

L1: COILTRONICS CTX10-1

TYPICAL APPLICATIONS

Single Cell Powered Constant Current LED Driver

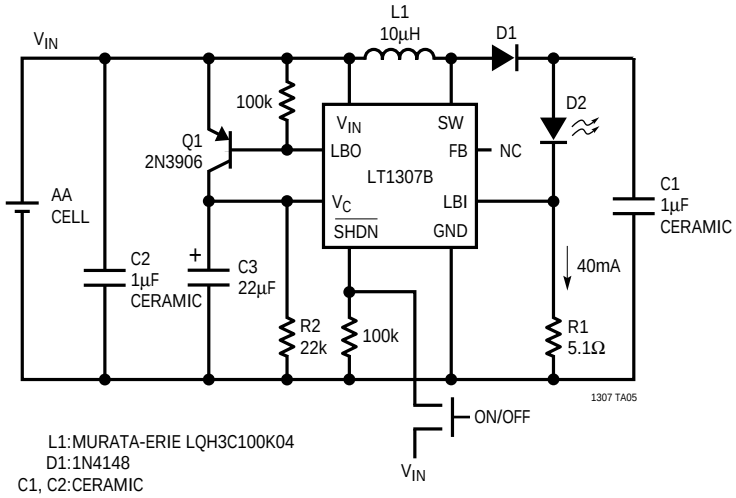

L1:MURATA-ERIE LQH3C100K04
D1:1N4148
C1, C2:CERAMIC
D2, D3:LUMEX SSL-X100133SRC/4 "MEGA-BRITE" RED LED
OR PANASONIC LNG992CF9 HIGH BRIGHTNESS BLUE LED

Flash Memory VPP Supply

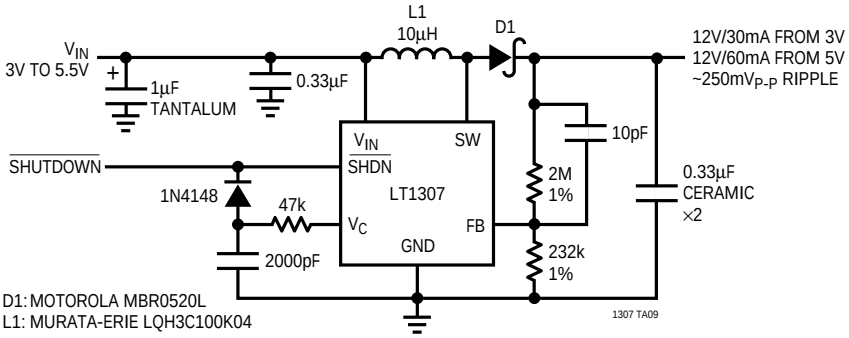

D1: MOTOROLA MBR0520L
L1: MURATA-ERIE LQH3C100K04

High Voltage Flyback Converter

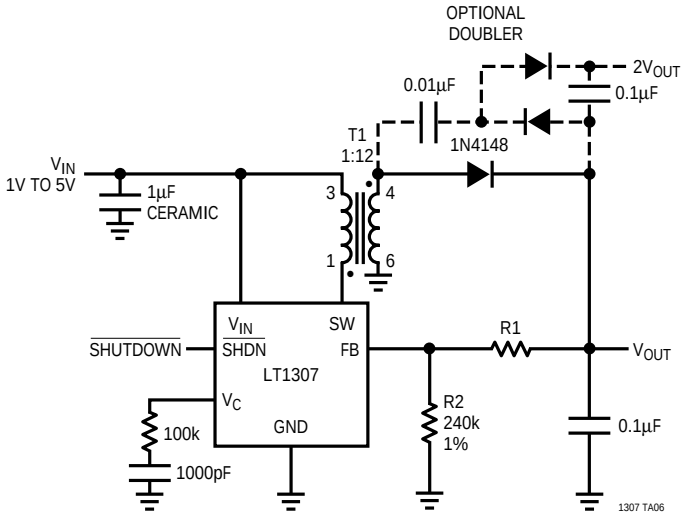

T1: DALE LPE3325-A190, n = 12 (605) 665-9301

$V_{OUT} = 1.22V\left(1 + \frac{R1}{R2}\right)$

MAXIMUM DUTY CYCLE: ≈80%

FOR FLYBACK, $V_{OUT} = \frac{DC}{1 - DC}\, n(V_{IN} - V_{SW})$

FOR $1V_{IN}$, MAXIMUM $V_{OUT} = \frac{0.8}{1 - 0.8}\, 12(1 - 0.2) \approx 37V$

FOR $2V_{IN}$, MAXIMUM $V_{OUT} \approx 85V$.
HIGHER VOLTAGES ACHIEVED WITH CAPACITIVE DOUBLER OR TRIPLER
NO SNUBBER REQUIRED WITH SPECIFIED TRANSFORMER AND $V_{IN} < 5V$

TYPICAL APPLICATIONS

Single Cell CCFL Power Supply

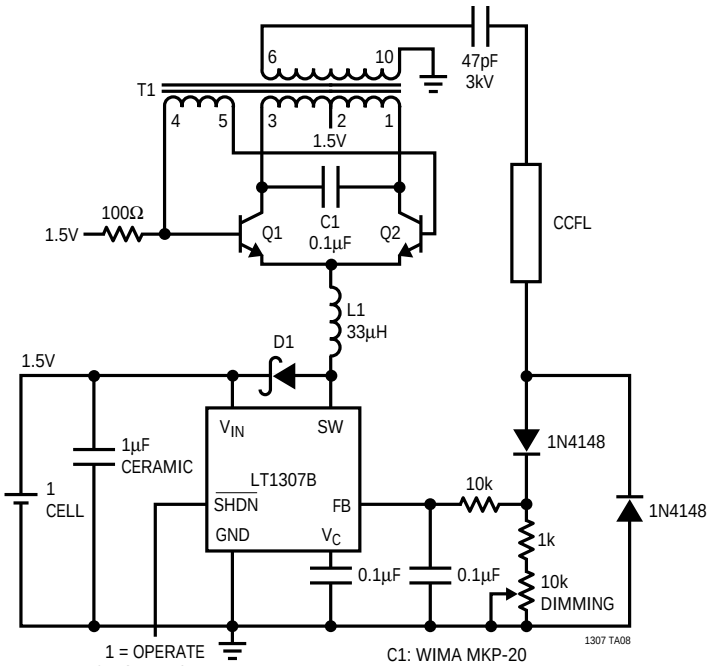

C1: WIMA MKP-20
D1: MOTOROLA MBR0520L
L1: SUMIDA CD54-330
T1: COILTRONICS CTX110611
Q1, Q2: ZETEX FZT-849

PACKAGE DESCRIPTION

Dimensions in inches (millimeters) unless otherwise noted.

MS8 Package
8-Lead Plastic MSOP
(LTC DWG # 05-08-1660)

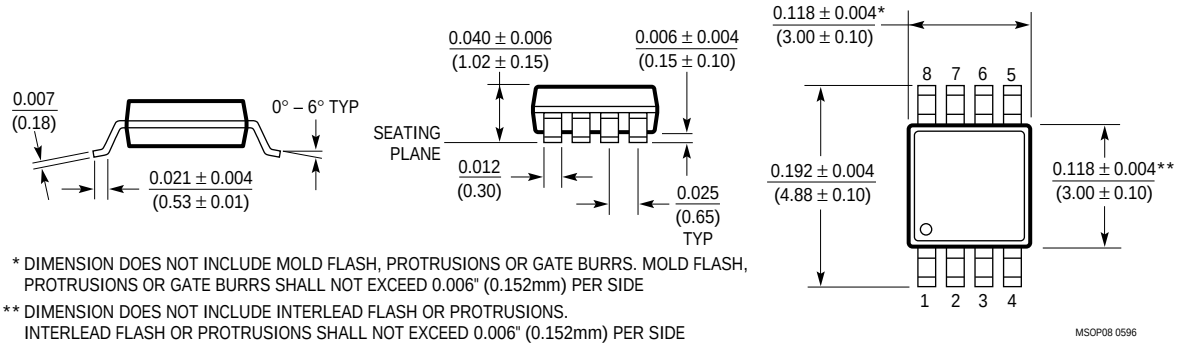

* DIMENSION DOES NOT INCLUDE MOLD FLASH, PROTRUSIONS OR GATE BURRS. MOLD FLASH, PROTRUSIONS OR GATE BURRS SHALL NOT EXCEED 0.006" (0.152mm) PER SIDE

** DIMENSION DOES NOT INCLUDE INTERLEAD FLASH OR PROTRUSIONS. INTERLEAD FLASH OR PROTRUSIONS SHALL NOT EXCEED 0.006" (0.152mm) PER SIDE

PACKAGE DESCRIPTION Dimensions in inches (millimeters) unless otherwise noted.

N8 Package
8-Lead PDIP (Narrow 0.300)
(LTC DWG # 05-08-1510)

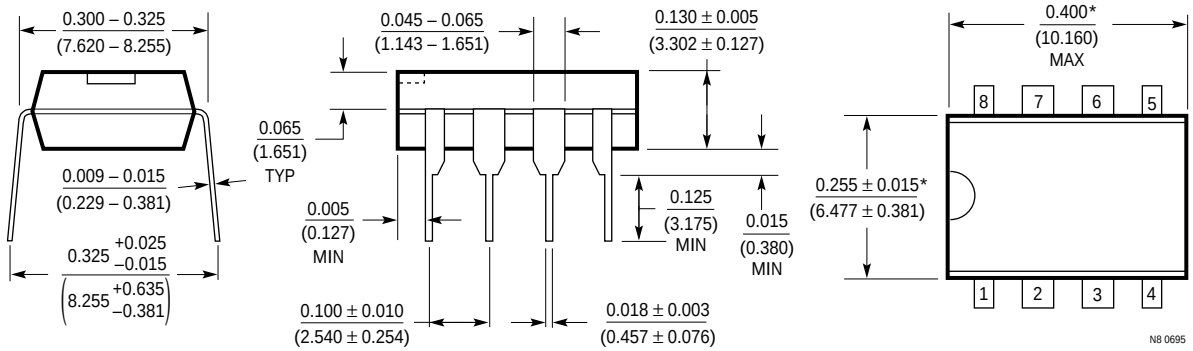

*THESE DIMENSIONS DO NOT INCLUDE MOLD FLASH OR PROTRUSIONS.
MOLD FLASH OR PROTRUSIONS SHALL NOT EXCEED 0.010 INCH (0.254mm)

S8 Package
8-Lead Plastic Small Outline (Narrow 0.150)
(LTC DWG # 05-08-1610)

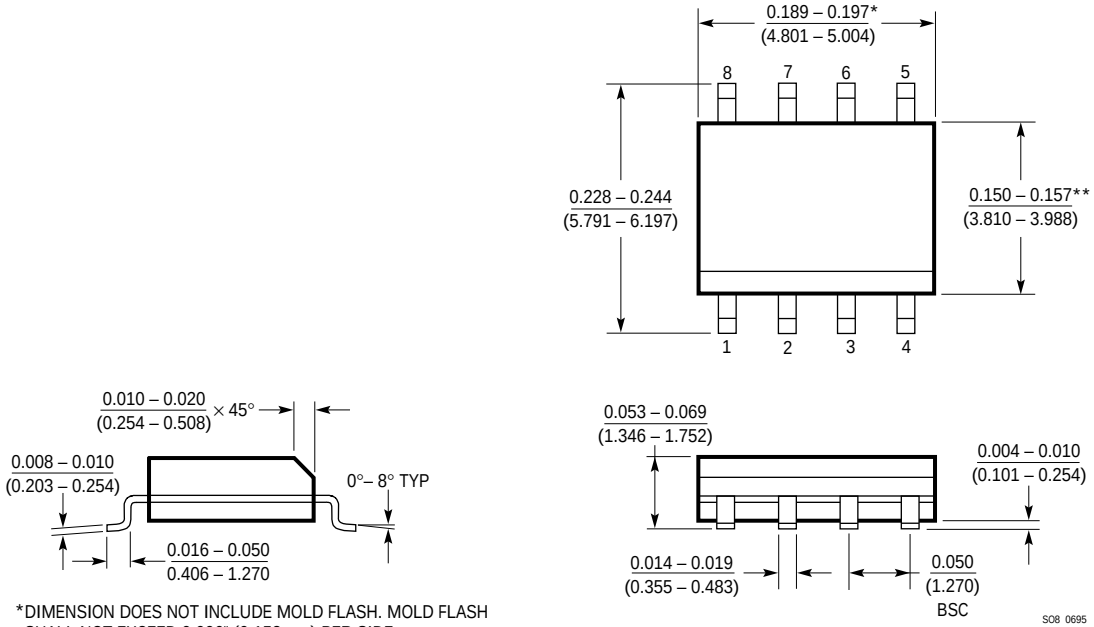

*DIMENSION DOES NOT INCLUDE MOLD FLASH. MOLD FLASH SHALL NOT EXCEED 0.006" (0.152mm) PER SIDE

**DIMENSION DOES NOT INCLUDE INTERLEAD FLASH. INTERLEAD FLASH SHALL NOT EXCEED 0.010" (0.254mm) PER SIDE

Information furnished by Linear Technology Corporation is believed to be accurate and reliable. However, no responsibility is assumed for its use. Linear Technology Corporation makes no representation that the interconnection of its circuits as described herein will not infringe on existing patent rights.

TYPICAL APPLICATION

LCD Bias Generator

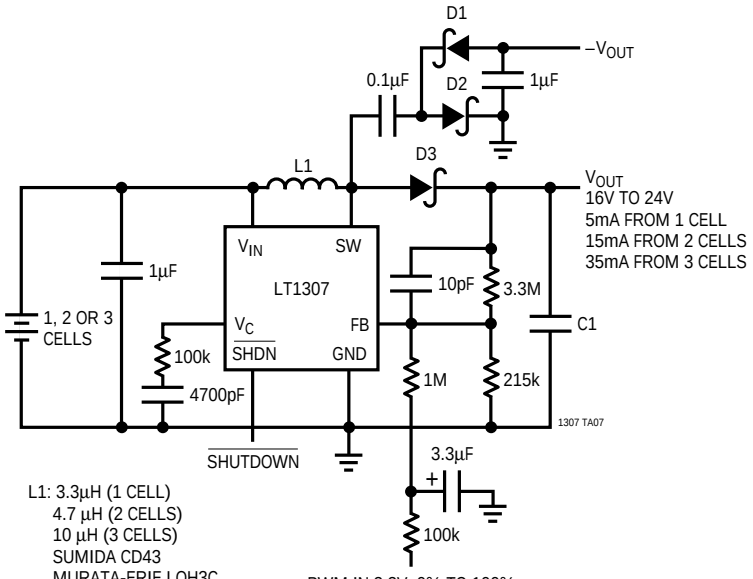

L1: 3.3µH (1 CELL)
4.7 µH (2 CELLS)
10 µH (3 CELLS)
SUMIDA CD43
MURATA-ERIE LQH3C
COILCRAFT D01608

C1:1 µF FOR +OUTPUT
0.01 µF FOR –OUTPUT

D1 TO D3: MBR0530 OR 1N4148

RELATED PARTS

PART NUMBER	DESCRIPTION	COMMENTS
LTC®1163	Triple High Side Driver for 2-Cell Inputs	1.8V Minimum Input, Drives N-Channel MOSFETs
LTC1174	Micropower Step-Down DC/DC Converter	94% Efficiency, 130µA I_Q, 9V to 5V at 300mA
LT1302	High Output Current Micropower DC/DC Converter	5V/600mA from 2V, 2A Internal Switch, 200µA I_Q
LT1304	2-Cell Micropower DC/DC Converter	Low-Battery Detector Active in Shutdown
LTC1440/1/2	Ultralow Power Single/Dual Comparators with Reference	2.8µA I_Q, Adjustable Hysteresis
LTC1516	2-Cell to 5V Regulated Charge Pump	12µA I_Q, No Inductors, 5V at 50mA from 3V Input
LT1521	Micropower Low Dropout Linear Regulator	500mV Dropout, 300mA Current, 12µA I_Q

Linear Technology Corporation
1630 McCarthy Blvd., Milpitas, CA 95035-7417
(408) 432-1900 • FAX: (408) 434-0507 • TELEX: 499-3977
LT/GP 1196 7K • PRINTED IN THE USA
© LINEAR TECHNOLOGY CORPORATION 1995