5V RS232 Transceiver with Advanced Power Management and One Receiver Active in Shutdown

FEATURES

- One Receiver Remains Active While in Shutdown
- ESD Protection over ±**15kV**
- Uses Small Capacitors: 0.1µF, 0.2µF, 1.0µF
- 60µA Supply Current in Shutdown
- Pin Compatible with LT1137A
- 120kBaud Operation for R_L = 3k, C_L = 2500pF
- 250kBaud Operation for R_L = 3k, C_L = 1000pF
- Operates to 120kBaud
- CMOS Comparable Low Power 30mW
- Operates from a Single 5V Supply
- Easy PC Layout—Flowthrough Architecture
- Rugged Bipolar Design
- Outputs Assume a High Impedance State When Off or Powered Down
- Absolutely No Latchup
- Available in SO and SSOP Packages

APPLICATIONS

- Notebook Computers
- Palmtop Computers

DESCRIPTION

The LT®1237 is an advanced low power three driver, five receiver RS232 transceiver. Included on the chip is a shutdown pin for reducing supply current near zero. During shutdown one receiver remains active to detect incoming RS232 signals, for example, to wake up a system.

The LT1237 is fully compliant with all EIA RS232 specifications. New ESD structures on the chip allow the LT1237 to survive multiple ±15kV strikes, eliminating the need for costly TransZorbs® on the RS232 line pins.

The LT1237 operates in excess of 120kbaud even driving heavy capacitive loads. Two shutdown modes allow the driver outputs to be shut down separately from the receivers for more versatile control of the RS232 interface. During shutdown, drivers and receivers assume a high impedance state.

LT, LTC and LT are registered trademarks of Linear Technology Corporation.
TransZorb is a registered trademark of General Instruments, GSI

TYPICAL APPLICATION

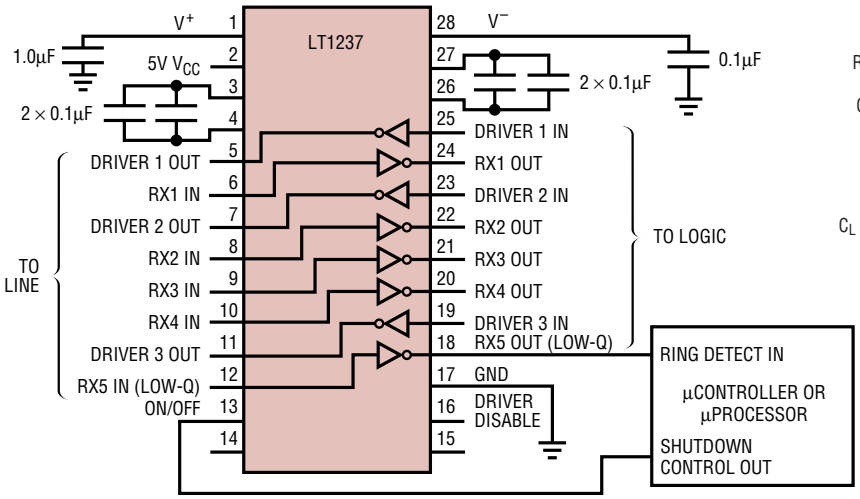

Output Waveforms

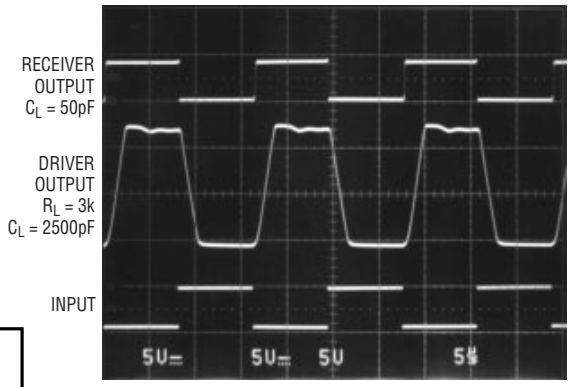

ABSOLUTE MAXIMUM RATINGS

(Note 1)

Supply Voltage (V_{CC}) 6V
V^+ 13.2V
V^- ..... –13.2V
Input Voltage
  Driver ..... V^- to V^+
  Receiver ..... –30V to 30V
Output Voltage
  Driver ..... –30V to 30V
  Receiver ..... –0.3V to V_{CC} + 0.3V
Short Circuit Duration
  V^+ ..... 30 sec
  V^- ..... 30 sec
  Driver Output ..... Indefinite
  Receiver Output ..... Indefinite
Operating Temperature Range
  LT1237C ..... 0°C to 70°C
Storage Temperature Range ..... –65°C to 150°C
Lead Temperature (Soldering, 10 sec) ..... 300°C

PACKAGE/ORDER INFORMATION

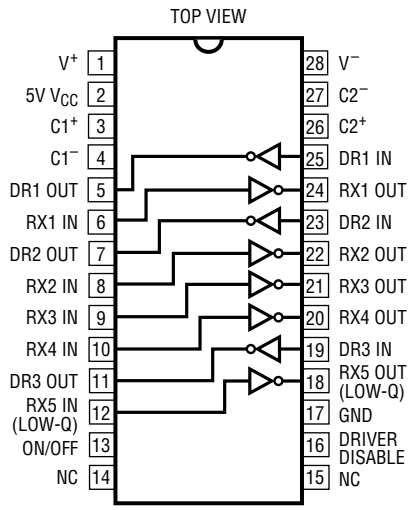

G PACKAGE
28-LEAD PLASTIC SSOP

NW PACKAGE
28-LEAD (WIDE) PDIP

SW PACKAGE
28-LEAD (WIDE) PLASTIC SO

T_{JMAX} = 150°C, θ_{JA} = 96°C/W (G)
T_{JMAX} = 150°C, θ_{JA} = 56°C/W (NW)
T_{JMAX} = 150°C, θ_{JA} = 85°C/W (SW)

ORDER PART NUMBER
LT1237CG LT1237CNW LT1237CSW

Consult factory for Industrial and Military grade parts.

ELECTRICAL CHARACTERISTICS

The ● denotes specifications which apply over the full operating temperature range, otherwise specifications are at T_A = 25°C. (Note 2)

PARAMETER	CONDITIONS		MIN	TYP	MAX	UNITS
Power Supply Generator						
V^+ Output				7.9		V
V^- Output				–7		V
Supply Current (V_{CC})	T_A = 25°C (Note 3)			6	12	mA
		●		6	14	mA
Supply Current when OFF (V_{CC})	Shutdown (Note 4)	●		0.06	0.15	mA
	Driver Disable			3.00		mA
Supply Rise Time Shutdown to Turn-On	C1 = C2 = 0.2µF, C^+ = 1.0µF, C^- = 0.1µF			2		ms
ON/OFF Pin Thresholds	Input Low Level (Drivers Enabled)		0.8	1.2		V
	Input High Level (Drivers Disabled)			1.6	2.4	V
ON/OFF Pin Current	0V ≤ $V_{ON/OFF}$ ≤ 5V	●	–15		80	µA
DRIVER DISABLE Pin Thresholds	Input Low Level (Drivers Enabled)	●	0.8	1.4		V
	Input High Level (Drivers Disabled)	●		1.4	2.4	V
DRIVER DISABLE Pin Current	0V ≤ $V_{DRIVER\ DISABLE}$ ≤ 5V	●	–10		500	µA
Oscillator Frequency	Driver Outputs Loaded R_L = 3k			130		kHz

ELECTRICAL CHARACTERISTICS

The ● denotes specifications which apply over the full operating temperature range, otherwise specifications are at T_A = 25°C. (Note 2)

PARAMETER	CONDITIONS			MIN	TYP	MAX	UNITS
Any Driver							
Output Voltage Swing	Load = 3k to GND	Positive	●	5.0	7.5		V
		Negative	●		–6.3	–5.0	V
Logic Input Voltage Level	Input Low Level (V_{OUT} = High)		●		1.4	0.8	V
	Input High Level (V_{OUT} = Low)		●	2.0	1.4		V
Logic Input Current	$0.8V \le V_{IN} \le 2V$		●		5	20	µA
Output Short-Circuit Current	V_{OUT} = 0V			±9	17		mA
Output Leakage Current	Shutdown V_{OUT} = ±30V (Note 4)		●		10	100	µA
Data Rate (Note 7)	R_L = 3k, C_L = 2500pF			120			kBaud
	R_L = 3k, C_L = 1000pF			250			kBaud
Slew Rate	R_L = 3k, C_L = 51pF				15	30	V/µs
	R_L = 3k, C_L = 2500pF			4	7		V/µs
Propagation Delay	Output Transition t_{HL} High to Low (Note 5)				0.6	1.3	µs
	Output Transition t_{LH} Low to High				0.5	1.3	µs
Any Receiver							
Input Voltage Thresholds	Input Low Threshold (V_{OUT} = High)			0.8	1.3		V
	Input High Threshold (V_{OUT} = Low)				1.7	2.4	V
Hysteresis			●	0.1	0.4	1.0	V
Input Resistance	V_{IN} = ±10V			3	5	7	kΩ
Output Leakage Current	Shutdown (Note 4) $0 \le V_{OUT} \le V_{CC}$		●		1	10	µA
Receivers 1, 2, 3, 4							
Output Voltage	Output Low, I_{OUT} = –1.6mA		●		0.2	0.4	V
	Output High, I_{OUT} = 160µA (V_{CC} = 5V)		●	3.5	4.2		V
Output Short-Circuit Current	Sinking Current, V_{OUT} = V_{CC}			–10	–20		mA
	Sourcing Current, V_{OUT} = 0V			10	20		mA
Propagation Delay	Output Transition t_{HL} High to Low (Note 6)				250	600	ns
	Output Transition t_{LH} Low to High				350	600	ns
Receiver 5 (LOW I_{SUPPLY} RX)							
Output Voltage	Output Low, I_{OUT} = –500µA		●		0.2	0.4	V
	Output High, I_{OUT} = 160µA (V_{CC} = 5V)		●	3.5	4.2		V
Output Short-Circuit Current	Sinking Current, V_{OUT} = V_{CC}			–2	–4		mA
	Sourcing Current, V_{OUT} = 0V			2	4		mA
Propagation Delay	Output Transition t_{HL} High to Low (Note 6)				1.0	3	µs
	Output Transition t_{LH} Low to High				0.6	3	µs

Note 1: Absolute Maximum Ratings are those values beyond which the life of the device may be impaired.

Note 2: Testing done at V_{CC} = 5V and $V_{ON/OFF}$ = 3V, unless otherwise specified.

Note 3: Supply current is measured as the average over several charge pump burst cycles. C^+ = 1.0µF, C^- = 0.1µF, C1 = C2 = 0.2µF. All outputs are open, with all driver inputs tied high.

Note 4: Measurements in shutdown are performed with $V_{ON/OFF} \le 0.1V$. Supply current measurements using driver disable are performed with $V_{DRIVER\ DISABLE} \ge 3V$.

Note 5: For driver delay measurements, R_L = 3k and C_L = 51pF. Trigger points are set between the driver's input logic threshold and the output transition to the zero crossing (t_{HL} = 1.4V to 0V and t_{LH} = 1.4V to 0V).

Note 6: For receiver delay measurements, C_L = 51pF. Trigger points are set between the receiver's input logic threshold and the output transition to standard TTL/CMOS logic threshold (t_{HL} = 1.3V to 2.4V and t_{LH} = 1.7V to 0.8V).

Note 7: Data rate operation guaranteed by slew rate, short-circuit current and propagation delay tests.

TYPICAL PERFORMANCE CHARACTERISTICS

Driver Output Voltage

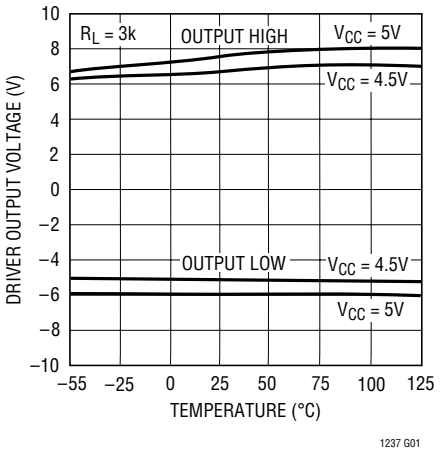

Receiver Input Thresholds

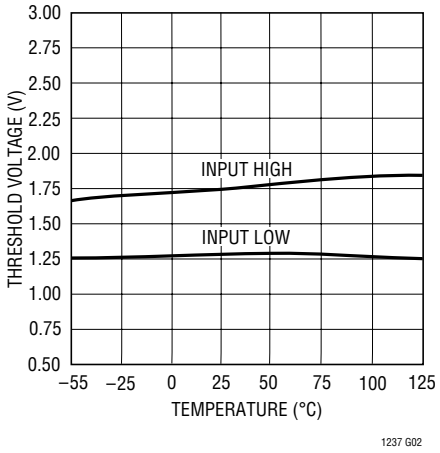

Supply Current vs Data Rate

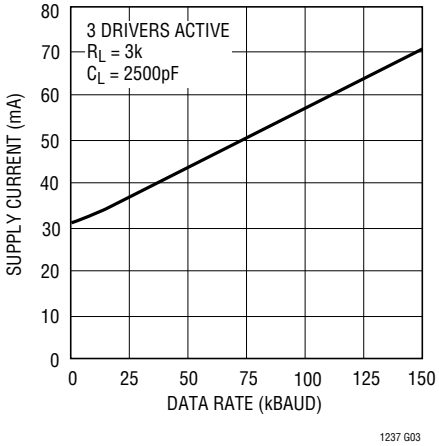

Supply Current in Shutdown

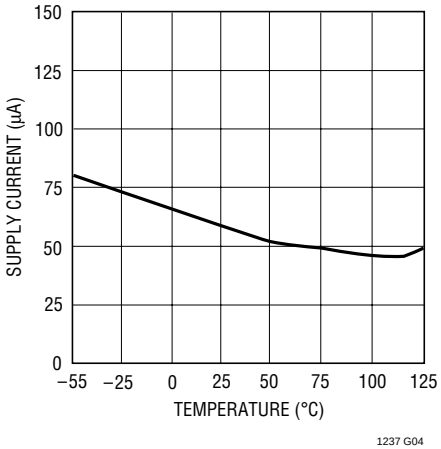

Supply Current in Driver Disable

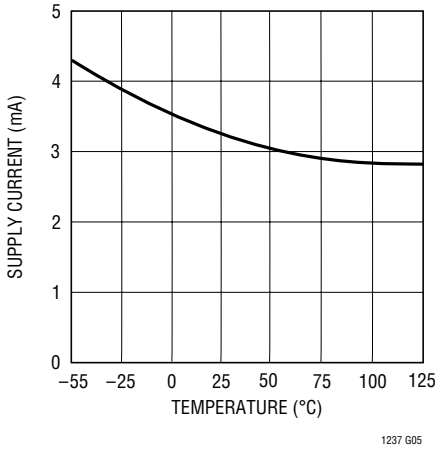

DRIVER DISABLE Threshold

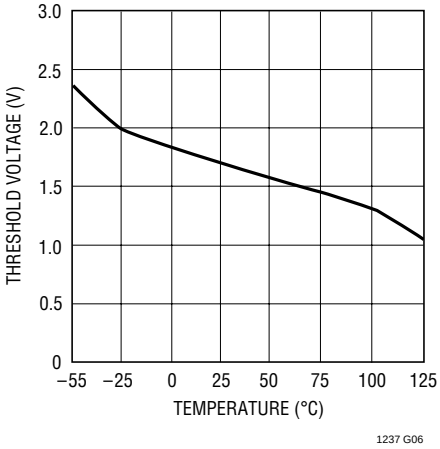

ON/OFF Thresholds

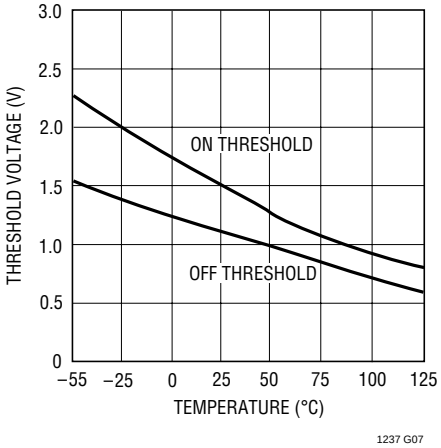

Supply Current

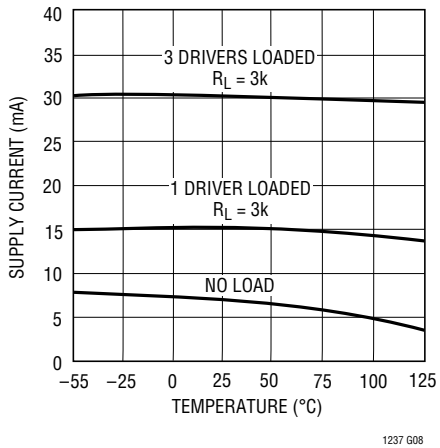

Driver Leakage in Shutdown

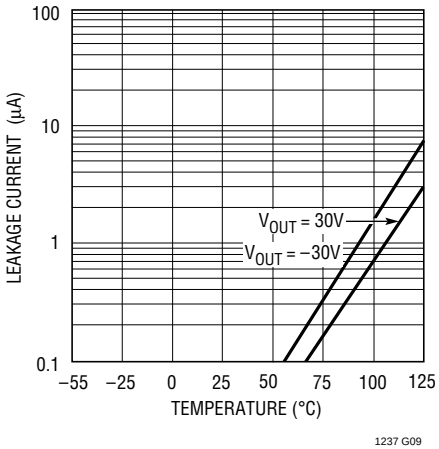

TYPICAL PERFORMANCE CHARACTERISTICS

Driver Short-Circuit Current

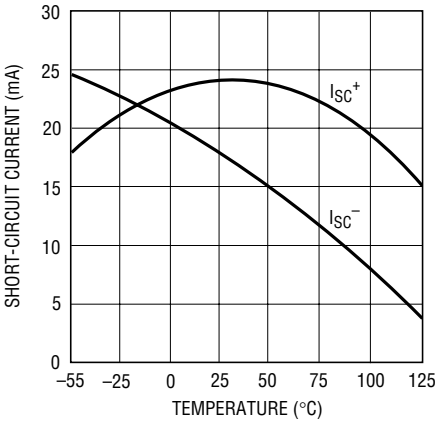

1237 G10

Receiver Short-Circuit Current

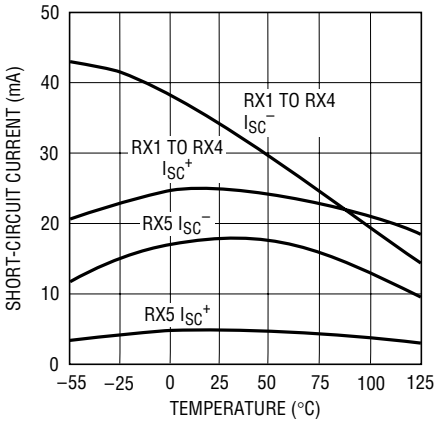

1237 G11

Receiver Output Waveforms

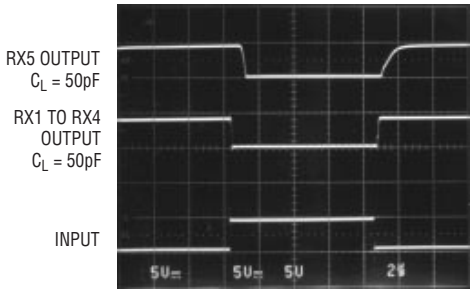

1237 G12

Driver Output Waveforms

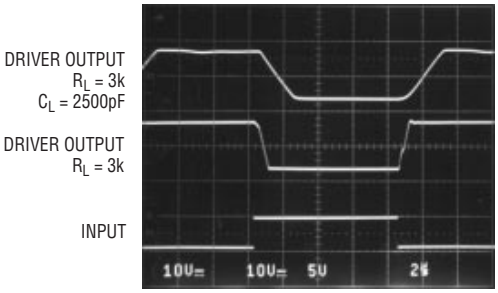

1237 G13

PIN FUNCTIONS

V_{CC}: 5V Input Supply Pin. This pin should be decoupled with a 0.1μF ceramic capacitor close to the package pin. Insufficient supply bypassing can result in low output drive levels and erratic charge pump operation.

GND: Ground Pin.

ON/OFF: TTL/CMOS Compatible Operating Mode Control. A logic low puts the device in the low power shutdown mode. All three drivers and four receivers (RX1, RX2, RX3, and RX4) assume a high impedance output state in shutdown. Only receiver RX5 remains active while the transceiver is in shutdown. The transceiver consumes only 60μA of supply current while in shutdown. A logic high fully enables the transceiver.

DRIVER DISABLE: This pin provides an alternate control for the charge pump and RS232 drivers. A logic high on this pin shuts down the charge pump and places all driver outputs in a high impedance state. All five receivers remain active under these conditions. Floating the driver disable pin or driving it to a logic low level fully enables the transceiver. A logic low on the ON/OFF pin supersedes the state of the DRIVER DISABLE pin. Supply current drops to 3mA when in driver disable mode.

V^+: Positive Supply Output (RS232 Drivers). $V^+ \approx 2V_{CC} - 1.5V$. This pin requires an external charge storage capacitor $C \geq 1.0\mu F$, tied to ground or V_{CC}. Larger value capacitors may be used to reduce supply ripple. The ratio of the capacitors on V^+ and V^- should be greater than 5 to 1.

V^-: Negative Supply Output (RS232 Drivers). $V^- \approx -(2V_{CC} - 2.5V)$. This pin requires an external charge storage capacitor $C \geq 0.1\mu F$. See the Applications Information section for guidance in choosing filter capacitors for V^+ and V^-.

PIN FUNCTIONS

$C1^+$, $C1^-$, $C2^+$, $C2^-$: Commutating Capacitor Inputs, require two external capacitors C ≥ 0.2µF: one from $C1^+$ to $C1^-$, and another from $C2^+$ to $C2^-$. The capacitor's effective series resistance should be less than 2Ω. For C ≥ 1µF, low ESR tantalum capacitors work well in this application, although small value ceramic capacitors may be used with a minimal reduction in charge pump compliance.

DRIVER IN: RS232 Driver Input Pins. These inputs are TTL/CMOS compatible. Inputs should not be allowed to float. Tie unused inputs to V_{CC}.

DRIVER OUT: Driver Outputs at RS232 Voltage Levels. Driver output swing meets RS232 levels for loads up to 3k. Slew rates are controlled for lightly loaded lines. Output current capability is sufficient for load conditions up to 2500pF. Outputs are in a high impedance state when in shutdown mode, V_{CC} = 0V, or when the DRIVER DISABLE pin is active. Outputs are fully short-circuit protected from V^- + 30V to V^+ – 30V. Applying higher voltages will not damage the device if the overdrive is moderately current limited. Short circuits on one output can load the power supply generator and may disrupt the signal levels of the other outputs. The driver outputs are protected against ESD to ±15kV for human body model discharges, ±8kV for IEC 1000-4-2 contact mode discharges and ±15kV for IEC 1000-4-2 air gap discharges.

RX IN: Receiver Inputs. These pins accept RS232 level signals (±30V) into a protected 5k terminating resistor. The receiver inputs are protected against ESD to ±15kV for human body model discharges, ±8kV for IEC 1000-4-2 contact mode discharges and ±15kV for IEC 1000-4-2 air gap discharges. Each receiver provides 0.4V of hysteresis for noise immunity. Open receiver inputs assume a logic low state.

RX OUT: Receiver Outputs with TTL/CMOS Voltage Levels. Outputs RX1, RX2, RX3, and RX4 are in a high impedance state when in shutdown mode to allow data line sharing. Outputs, including LOW-Q RX OUT, are fully short-circuit protected to ground or V_{CC} with the power on, off, or in shutdown mode.

LOW Q-CURRENT RX IN: Low Power Receiver Input. This special receiver remains active when the part is in shutdown mode, consuming typically 60µA. This receiver has the same 5k input impedance and ±10kV ESD protection characteristics as the other receivers.

LOW Q-CURRENT RX OUT: Low Power Receiver Output. This pin produces the same TTL/CMOS output voltage levels as receivers RX1, RX2, RX3, and RX4 with slightly decreased speed and short-circuit current. Data rates to 120kbaud are supported by this receiver.

ESD PROTECTION

The RS232 line inputs of the LT1237 have on-chip protection from ESD transients up to ±15kV for human body discharges, ±8kV for IEC 1000-4-2 contact mode discharges and ±15V for IEC 1000-4-2 air gap discharges. The protection structures act to divert the static discharge safely to system ground. In order for the ESD protection to function effectively, the power supply and ground pins of the LT1237 must be connected to ground through low impedances. The power supply decoupling capacitors and charge pump storage capacitors provide this low impedance in normal application of the circuit. The only constraint is that low ESR capacitors must be used for bypassing and charge storage. ESD testing must be done with pins V_{CC}, V_L, V^+, V^- and GND shorted to ground or connected with low ESR capacitors.

ESD Test Circuit

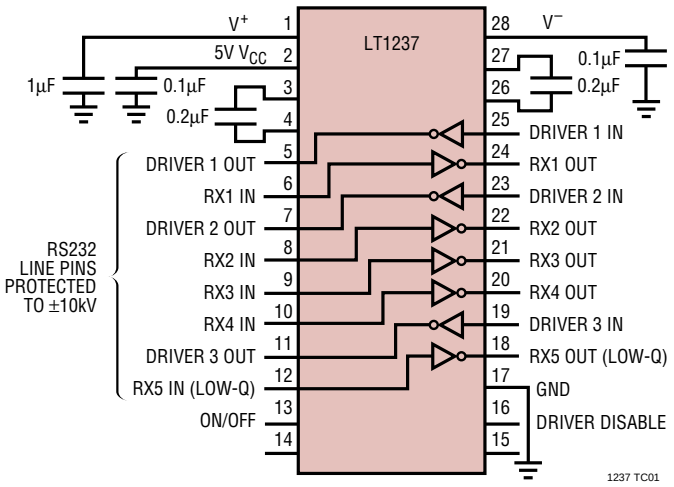

APPLICATIONS INFORMATION

Storage Capacitor Selection

The V^+ and V^- storage capacitors must be chosen carefully to insure low ripple and stable operation. The LT1237 charge pump operates in a power efficient Burst Mode™ operation. When storage capacitor voltage drops below a preset threshold, the oscillator is gated on until V^+ and V^- are boosted up to levels exceeding a second threshold. The oscillator then turns off, and current is supplied from the V^+ and V^- storage capacitors.

The V^- potential is monitored to control charge pump operation. It is therefore important to insure lower V^+ ripple than V^- ripple, or erratic operation of the charge pump will result. Proper operation is insured in most applications by choosing the V^+ filter capacitor to be at least 5 times the V^- filter capacitor value. If V^+ is more heavily loaded than V^-, a larger ratio may be needed.

The V^- filter capacitor should be selected to obtain low ripple when the drivers are loaded, forcing the charge pump into continuous mode. A minimum value 0.1µF is suggested.

Do not attempt to reduce V^- ripple when the charge pump is in discontinuous Burst Mode operation. The ripple in this mode is determined by internal comparator thresholds. Larger storage capacitor values increase the burst period, and do not reduce ripple amplitude.

Power Saving Operational Modes

The LT1237 has both shutdown and driver disable operating modes. These operating modes can optimize power consumption based upon applications needs.

The On/Off shutdown control turns off all circuitry except for Low-Q RX5. When RX5 detects a signal, this information can be used to wake up the system for full operation.

If more than one line must be monitored, the driver disable mode provides a power efficient operating option. The driver disable mode turns off the charge pump and RS232 drivers, but keeps all five receivers active. Power consumption in driver disable mode is 3mA from V_{CC}.

Burst Mode is a trademark of Linear Technology Corporation

PACKAGE DESCRIPTION

Dimensions in inches (millimeters) unless otherwise noted.

G Package
28-Lead Plastic SSOP (0.209)
(LTC DWG # 05-08-1640)

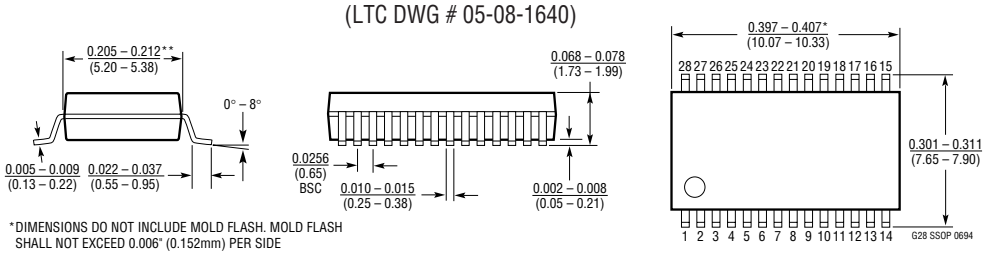

*DIMENSIONS DO NOT INCLUDE MOLD FLASH. MOLD FLASH SHALL NOT EXCEED 0.006" (0.152mm) PER SIDE

**DIMENSIONS DO NOT INCLUDE INTERLEAD FLASH. INTERLEAD FLASH SHALL NOT EXCEED 0.010" (0.254mm) PER SIDE

NW Package
28-Lead PDIP (Wide 0.600)
(LTC DWG # 05-08-1520)

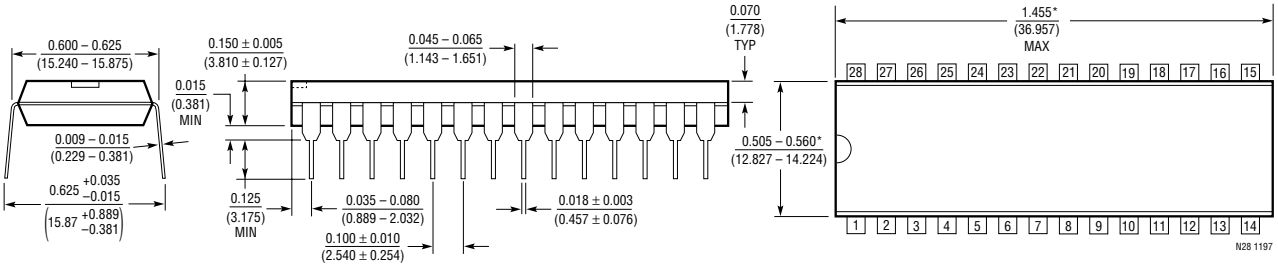

*THESE DIMENSIONS DO NOT INCLUDE MOLD FLASH OR PROTRUSIONS. MOLD FLASH OR PROTRUSIONS SHALL NOT EXCEED 0.010 INCH (0.254mm)

Information furnished by Linear Technology Corporation is believed to be accurate and reliable. However, no responsibility is assumed for its use. Linear Technology Corporation makes no representation that the interconnection of its circuits as described herein will not infringe on existing patent rights.

PACKAGE DESCRIPTION

Dimensions in inches (millimeters) unless otherwise noted.

SW Package
28-Lead Plastic Small Outline (Wide 0.300)
(LTC DWG # 05-08-1620)

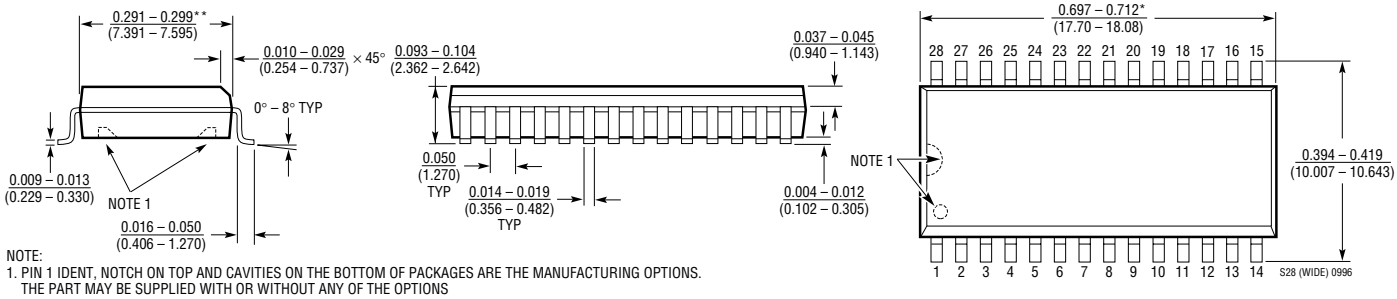

NOTE:
1. PIN 1 IDENT, NOTCH ON TOP AND CAVITIES ON THE BOTTOM OF PACKAGES ARE THE MANUFACTURING OPTIONS. THE PART MAY BE SUPPLIED WITH OR WITHOUT ANY OF THE OPTIONS

*DIMENSION DOES NOT INCLUDE MOLD FLASH. MOLD FLASH SHALL NOT EXCEED 0.006" (0.152mm) PER SIDE

**DIMENSION DOES NOT INCLUDE INTERLEAD FLASH. INTERLEAD FLASH SHALL NOT EXCEED 0.010" (0.254mm) PER SIDE

TYPICAL APPLICATION

Typical Mouse Driving Application

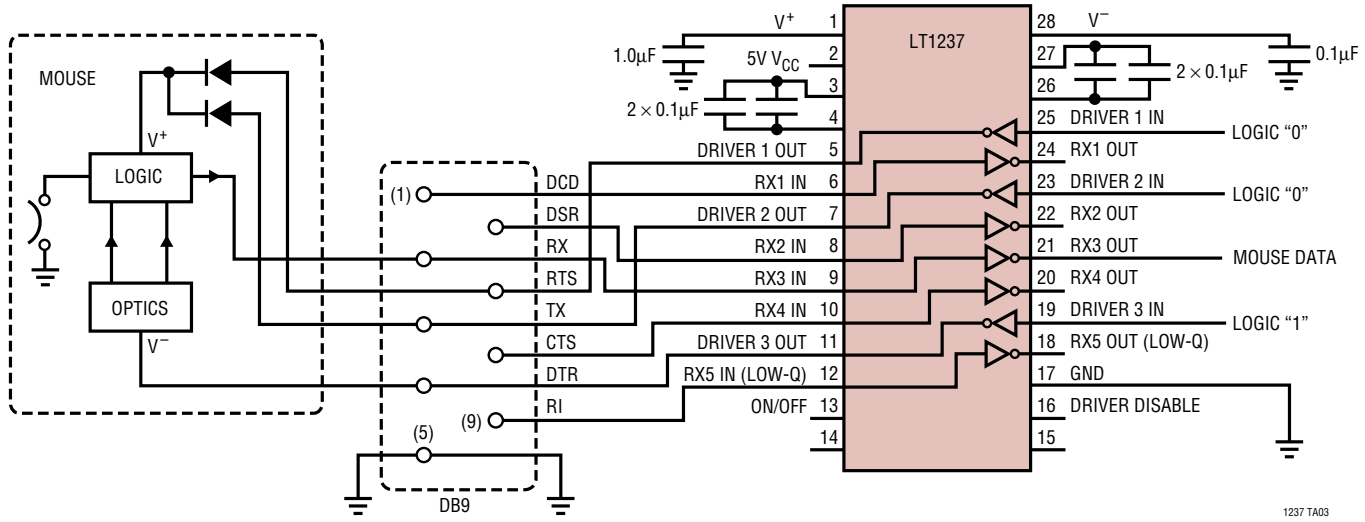

RELATED PARTS

PART NUMBER	DESCRIPTION	COMMENTS
LTC®485	Low Power RS485 Transceiver	
LT1137A	3Dx/5Rx RS232 Transceiver	15kV ESD
LTC1387	RS232/RS485 Multiprotocol Transceiver	
LT1780/LT1781	2Dx/2Rx RS232 Transceiver	15kV ESD
LT1785/LT1791	60V Fault Tolerant RS485 Transceiver	15kV ESD

Linear Technology Corporation
1630 McCarthy Blvd., Milpitas, CA 95035-7417
(408)432-1900 • FAX: (408) 434-0507 • www.linear-tech.com
1237fa LT/TP 0799 2K REV A • PRINTED IN USA
© LINEAR TECHNOLOGY CORPORATION 1992