Picoamp Input Current, Microvolt Offset, Low Noise Op Amp

FEATURES

- OP-07 Type Performance:
  at 1/8th of OP-07's Supply Current
  at 1/20th of OP-07's Bias and Offset Currents
- *Guaranteed* Offset Voltage: 25µV Max
- *Guaranteed* Bias Current: 100pA Max
- *Guaranteed* Drift: 0.6µV/°C Max
- Low Noise, 0.1Hz to 10Hz: 0.5μV_{P-P}
- *Guaranteed* Low Supply Current: 500µA Max
- *Guaranteed* CMRR: 114dB Min
- *Guaranteed* PSRR: 114dB Min
- *Guaranteed* Operation at ±1.2V Supplies

APPLICATIONS

- Replaces OP-07 While Saving Power
- Precision Instrumentation
- Charge Integrators
- Wide Dynamic Range Logarithmic Amplifiers
- Light Meters
- Low Frequency Active Filters
- Thermocouple Amplifiers

DESCRIPTION

The LT®1012 is an internally compensated universal precision operational amplifier which can be used in practically all precision applications. The LT1012 combines picoampere bias currents (which are maintained over the full –55°C to 125°C temperature range), microvolt offset voltage (and low drift with time and temperature), low voltage and current noise, and low power dissipation. The LT1012 achieves precision operation on two Ni-Cad batteries with 1mW of power dissipation. Extremely high common mode and power supply rejection ratios, practically unmeasurable warm-up drift, and the ability to deliver 5mA load current with a voltage gain of one million round out the LT1012's superb precision specifications.

The all around excellence of the LT1012 eliminates the necessity of the time consuming error analysis procedure of precision system design in many applications; the LT1012 can be stocked as the universal internally compensated precision op amp.

LT, LTC and LT are registered trademarks of Linear Technology Corporation.
Protected by U. S. patents 4,575,685 and 4,775,884

TYPICAL APPLICATION

±250V Common Mode Range Instrumentation Amplifier (A_V = 1)

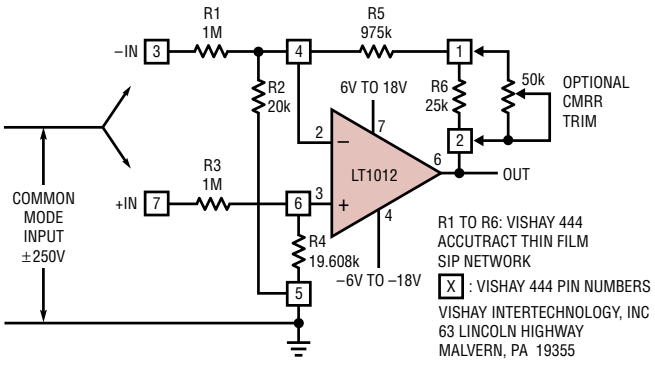

COMMON MODE REJECTION RATIO = 74dB (RESISTOR LIMITED)
WITH OPTIONAL TRIM = 130dB
OUTPUT OFFSET (TRIMMABLE TO ZERO) = 500µV
OUTPUT OFFSET DRIFT = 10µV/°C
INPUT RESISTANCE = 1M

LT1012A • TA01

Typical Distribution of Input Offset Voltage

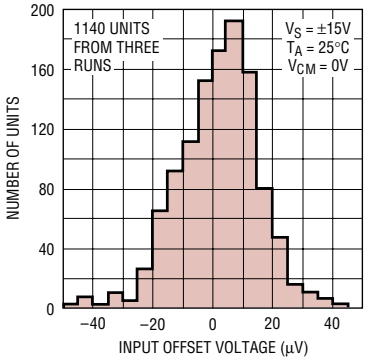

LT1012A • TA02

ABSOLUTE MAXIMUM RATINGS (Note 1)

Supply Voltage ..... ±20V
Differential Input Current (Note 1) ..... ±10mA
Input Voltage ..... ±20V
Output Short Circuit Duration ..... Indefinite

Operating Temperature Range
LT1012AM/LT1012M **(OBSOLETE)**....–55°C to 125°C
LT1012I/LT1012AI ..... –40°C to 85°C
LT1012AC/LT1012C
LT1012D/LT1012S8 ..... 0°C to 70°C
Storage Temperature Range ..... –65°C to 150°C
Lead Temperature (Soldering, 10 sec) ..... 300°C

PACKAGE/ORDER INFORMATION

TOP VIEW

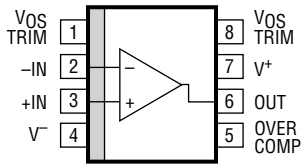

S8 PACKAGE
8-LEAD PLASTIC SO

T_{JMAX} = 100°C, θ_{JA} = 170°C/W

ORDER PART NUMBER
LT1012S8 LT1012IS8 LT1012ACS8 LT1012AIS8
S8 PART MARKING
1012 1012I 1012A 1012AI

TOP VIEW

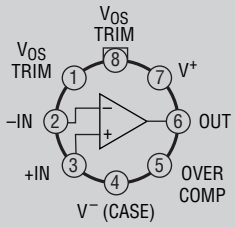

H PACKAGE
8-LEAD TO-5 METAL CAN

T_{JMAX} = 150°C, θ_{JA} = 150°C/W, θ_{JC} = 45°C/W

ORDER PART NUMBER
LT1012AMH LT1012MH LT1012ACH LT1012CH LT1012DH

OBSOLETE PACKAGE
Consider the S8 or N8 Packages for Alternate Source

TOP VIEW

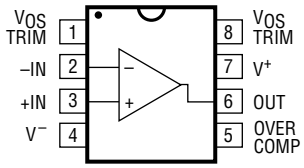

N8 PACKAGE
8-LEAD PDIP

T_{JMAX} = 100°C, θ_{JA} = 130°C/W

ORDER PART NUMBER
LT1012ACN8 LT1012AIN8 LT1012CN8 LT1012DN8 LT1012IN8

Consult LTC Marketing for parts specified with wider operating temperature ranges.

ELECTRICAL CHARACTERISTICS

$V_S = \pm 15V$, $V_{CM} = 0V$, $T_A = 25°C$, unless otherwise noted.

SYMBOL	PARAMETER	CONDITIONS	LT1012AM/AC/AI MIN	LT1012AM/AC/AI TYP	LT1012AM/AC/AI MAX	LT1012M/I MIN	LT1012M/I TYP	LT1012M/I MAX	LT1012C MIN	LT1012C TYP	LT1012C MAX	UNITS
V_{OS}	Input Offset Voltage			8	25		8	35		10	50	µV
		(Note 3)		20	90		20	90		25	120	µV
	Long Term Input Offset Voltage Stability			0.3			0.3			0.3		µV/month
I_{OS}	Input Offset Current			15	100		15	100		20	150	pA
		(Note 3)		25	150		25	150		30	200	pA
I_B	Input Bias Current			±25	±100		±25	±100		±30	±150	pA
		(Note 3)		±35	±150		±35	±150		±40	±200	pA
e_n	Input Noise Voltage	0.1Hz to 10Hz		0.5			0.5			0.5		μV_{P-P}
e_n	Input Noise Voltage Density	f_O = 10Hz (Note 4)		17	30		17	30		17	30	$nV\sqrt{Hz}$
		f_O = 1000Hz (Note 5)		14	22		14	22		14	22	$nV\sqrt{Hz}$
i_n	Input Noise Current Density	f_O = 10Hz		20			20			20		$fA/\sqrt{Hz}$
A_{VOL}	Large Signal Voltage Gain	$V_{OUT} = \pm 12V$, $R_L \geq 10k\Omega$	300	2000		300	2000		200	2000		V/mV
		$V_{OUT} = \pm 10V$, $R_L \geq 2k\Omega$	300	1000		200	1000		200	1000		V/mV
CMRR	Common Mode Rejection Ratio	$V_{CM} = \pm 13.5V$	114	132		114	132		110	132		dB
PSRR	Power Supply Rejection Ratio	$V_S = \pm 1.2V$ to $\pm 20V$	114	132		114	132		110	132		dB
	Input Voltage Range		±13.5	±14		±13.5	±14		±13.5	±14		V
V_{OUT}	Output Voltage Swing	$R_L = 10k\Omega$	±13	±14		±13	±14		±13	±14		V
	Slew Rate		0.1	0.2		0.1	0.2		0.1	0.2		V/µs
I_S	Supply Current			370	500		380			380		µA
		(Note 3)		380	600		380	600		380	600	µA

ELECTRICAL CHARACTERISTICS

$V_S = \pm 15V$, $V_{CM} = 0V$, $T_A = 25°C$, unless otherwise noted.

SYMBOL	PARAMETER	CONDITIONS	LT1012D MIN	LT1012D TYP	LT1012D MAX	LT1012S8 MIN	LT1012S8 TYP	LT1012S8 MAX	UNITS
V_{OS}	Input Offset Voltage			12	60		15	120	µV
		(Note 3)		25			25	180	µV
	Long Term Input Offset Voltage Stability			0.3			0.4		µV/month
I_{OS}	Input Offset Current			20	150		50	280	pA
		(Note 3)		30			60	380	pA
I_B	Input Bias Current			±30	±150		±80	±300	pA
		(Note 3)		±40			±120	±400	pA
e_n	Input Noise Voltage	0.1Hz to 10Hz		0.5			0.5		μV_{P-P}
e_n	Input Noise Voltage Density	f_O = 10Hz (Note 5)		17	30		17	30	$nV\sqrt{Hz}$
		f_O = 1000Hz (Note 5)		14	22		14	22	$nV\sqrt{Hz}$
i_n	Input Noise Current Density	f_O = 10Hz		20			20		$fA/\sqrt{Hz}$
A_{VOL}	Large-Signal Voltage Gain	$V_{OUT} = \pm 12V, R_L \geq 10k\Omega$	200	2000		200	2000		V/mV
		$V_{OUT} = \pm 10V, R_L \geq 2k\Omega$	200	1000		120	1000		V/mV
CMRR	Common Mode Rejection Ratio	$V_{CM} = \pm 13.5V$	110	132		110	132		dB
PSRR	Power Supply Rejection Ratio	$V_S = \pm 1.2V$ to $\pm 20V$	110	132		110	132		dB
	Input Voltage Range		±13.5	±14.0		±13.5	±14.0		V
V_{OUT}	Output Voltage Swing	$R_L = 10k\Omega$	±13	±14		±13	±14		V
	Slew Rate		0.1	0.2		0.1	0.2		V/µs
I_S	Supply Current	(Note 3)		380	600		380	600	µA

ELECTRICAL CHARACTERISTICS

The ● denotes the specifications which apply over the full operating temperature range of –55°C ≤ T_A ≤ 125°C for LT1012AM and LT1012M, and –40°C ≤ T_A ≤ 85°C for LT1012AI and LT1012I. V_S = ±15V, V_{CM} = 0V, unless otherwise noted.

SYMBOL	PARAMETER	CONDITIONS		LT1012AM/AI MIN	LT1012AM/AI TYP	LT1012AM/AI MAX	LT1012M/I MIN	LT1012M/I TYP	LT1012M/I MAX	UNITS
V_{OS}	Input Offset Voltage		●		30	60		30	180	µV
		(Note 3)	●		40	180		40	250	µV
	Average Temperature Coefficient of Input Offset Voltage		●		0.2	0.6		0.2	1.5	µV/°C
I_{OS}	Input Offset Current		●		30	250		30	250	pA
		(Note 3)	●		70	350		70	350	pA
	Average Temperature Coefficient of Input Offset Current		●		0.3	2.5		0.3	2.5	pA/°C
I_B	Input Bias Current		●		±80	±600		±80	±600	pA
		(Note 3)	●		±150	±800		±150	±800	pA
	Average Temperature Coefficient of Input Bias Current		●		0.6	6.0		0.6	6.0	pA/°C
A_{VOL}	Large-Signal Voltage Gain	V_{OUT} = ±12V, R_L ≥ 10kΩ	●	200	1000		150	1000		V/mV
		V_{OUT} = ±10V, R_L ≥ 2kΩ	●	200	600		100	600		V/mV
CMRR	Common Mode Rejection Ratio	V_{CM} = ±13.5V	●	110	128		108	128		dB
PSRR	Power Supply Rejection Ratio	V_S = ±1.5V to ±20V	●	110	126		108	126		dB
	Input Voltage Range		●	±13.5			±13.5			V
V_{OUT}	Output Voltage Swing	R_L = 10kΩ	●	±13	±14		±13	±14		V
I_S	Supply Current		●		400	650		400	800	µA

ELECTRICAL CHARACTERISTICS

The ● denotes the specifications which apply over the full operating temperature range of 0°C ≤ T_A ≤ 70°C. V_S = ±15V, V_{CM} = 0V, unless otherwise noted.

SYMBOL	PARAMETER	CONDITIONS		LT1012AC MIN	LT1012AC TYP	LT1012AC MAX	LT1012C MIN	LT1012C TYP	LT1012C MAX	UNITS
V_{OS}	Input Offset Voltage		●		20	60		20	100	µV
		(Note 3)	●		30	160		30	200	µV
	Average Temperature Coefficient of Input Offset Voltage		●		0.2	0.6		0.2	1.0	µV/°C
I_{OS}	Input Offset Current		●		25	230		35	230	pA
		(Note 3)	●		40	300		45	300	pA
	Average Temperature Coefficient of Input Offset Current		●		0.3	2.5		0.3	2.5	pA/°C
I_B	Input Bias Current		●		±35	±230		±35	±230	pA
		(Note 3)	●		±50	±300		±50	±300	pA
	Average Temperature Coefficient of Input Bias Current		●		0.3	2.5		0.3	2.5	pA/°C
A_{VOL}	Large-Signal Voltage Gain	V_{OUT} = ±12V, R_L ≥ 10kΩ	●	200	1500		150	1500		V/mV
		V_{OUT} = ±10V, R_L ≥ 2kΩ	●	200	1000		150	800		V/mV
CMRR	Common Mode Rejection Ratio	V_{CM} = 13.5V	●	110	130		108	130		dB
PSRR	Power Supply Rejection Ratio	V_S = ±1.3V to ±20V	●	110	128		108	128		dB
	Input Voltage Range		●	±13.5			±13.5			V
V_{OUT}	Output Voltage Swing	R_L = 10kΩ	●	±13	±14		±13	±14		V
I_S	Supply Current		●		400	600		400	800	µA

ELECTRICAL CHARACTERISTICS

The ● denotes the specifications which apply over the full operating temperature range of 0°C ≤ T_A ≤ 70°C. V_S = ±15V, V_{CM} = 0V, unless otherwise noted.

SYMBOL	PARAMETER	CONDITIONS		LT1012D MIN	LT1012D TYP	LT1012D MAX	LT1012S8 MIN	LT1012S8 TYP	LT1012S8 MAX	UNITS
V_{OS}	Input Offset Voltage		●		25	140		30	200	µV
		(Note 3)	●		40			45	270	µV
	Average Temperature Coefficient of Input Offset Voltage		●		0.3	1.7		0.3	1.8	µV/°C
I_{OS}	Input Offset Current		●		35	380		60	380	pA
		(Note 3)	●		45			80	500	pA
	Average Temperature Coefficient of Input Offset Current		●		0.35	4.0		0.4	4.0	pA/°C
I_B	Input Bias Current		●		±50	±420		±100	±420	pA
		(Note 3)	●		±65			±150	±550	pA
	Average Temperature Coefficient of Input Bias Current		●		0.4	5.0		0.5	5.0	pA/°C
A_{VOL}	Large-Signal Voltage Gain	V_{OUT} = ±12V, R_L ≥ 10kΩ	●	150	1500		150	1500		V/mV
		V_{OUT} = ±10V, R_L ≥ 2kΩ	●	150	800		100	800		V/mV
CMRR	Common Mode Rejection Ratio	V_{CM} = ±13.5V	●	108	130		108	130		dB
PSRR	Power Supply Rejection Ratio	V_S = ±1.3V to ±20V	●	108	128		108	128		dB
	Input Voltage Range		●	±13.5			±13.5			V
V_{OUT}	Output Voltage Swing	R_L = 10kΩ	●	±13	±14		±13	±14		V
I_S	Supply Current		●		400	800		400	800	µA

Note 1: Absolute Maximum Ratings are those values beyond which the life of a device may be impaired.

Note 2: Differential input voltages greater than 1V will cause excessive current to flow through the input protection diodes unless limiting resistance is used.

Note 3: These specifications apply for $V_{MIN} \le V_S \le \pm 20V$ and $-13.5V \le V_{CM} \le 13.5V$ (for $V_S = \pm 15V$). V_{MIN} = ±1.2V at 25°C, ±1.3V from 0°C to 70°C, ±1.5V from –55°C to 125°C.

Note 4: 10Hz noise voltage density is sample tested on every lot. Devices 100% tested at 10Hz are available on request.

Note 5: This parameter is tested on a sample basis only.

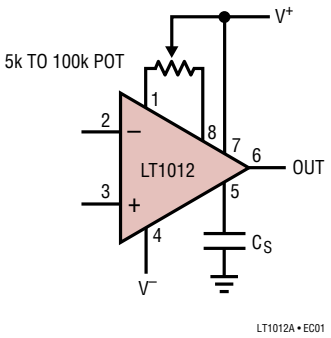

LT1012A • EC01

Optional Offset Nulling and Overcompensation Circuits

Input offset voltage can be adjusted over a ±800µV range with a 5k to 100k potentiometer.

The LT1012 is internally compensated for unity gain stability. The overcompensation capacitor, C_S, can be used to improve capacitive load handling capability, to narrow noise bandwidth, or to stabilize circuits with gain in the feedback loop.

TYPICAL PERFORMANCE CHARACTERISTICS

Offset Voltage vs Source Resistance (Balanced or Unbalanced)

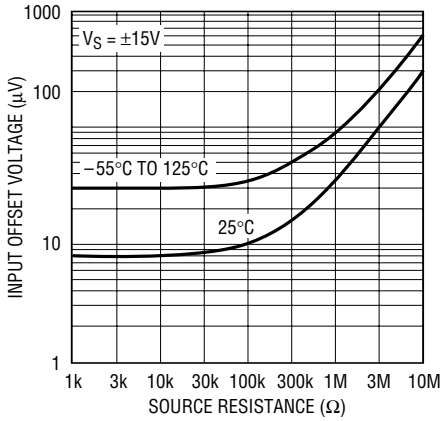

LT1012A • TPC01

Typical Distribution of Input Bias Current

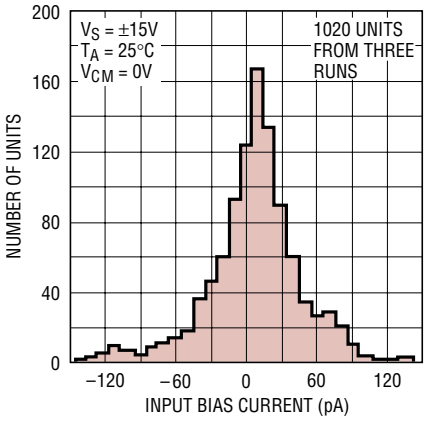

LT1012A • TPC02

Typical Distribution of Input Offset Current

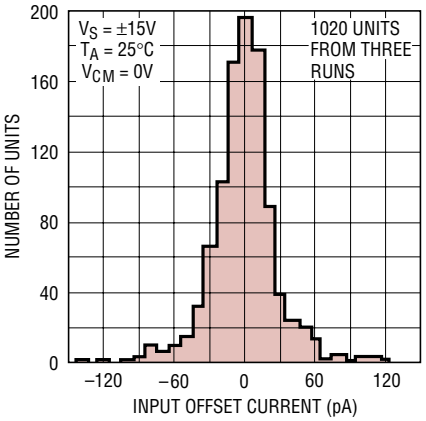

LT1012A • TPC03

Input Bias Current vs Temperature

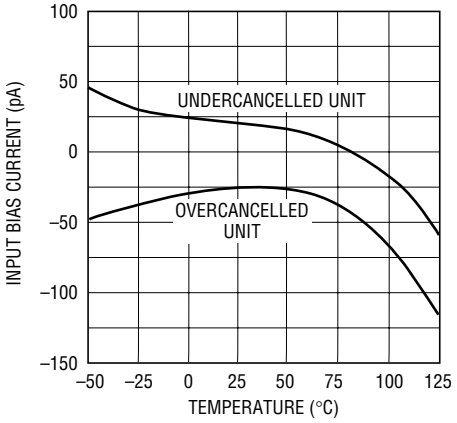

LT1012A • TPC04

Input Bias Current Over Common Mode Range

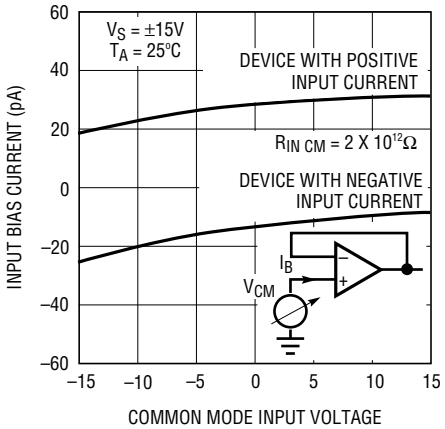

LT1012A * TPC5

Offset Voltage Drift vs Source Resistance (Balanced or Unbalanced)

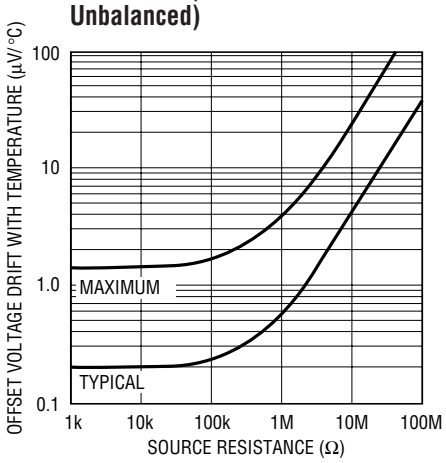

LT1012 • TPC06

Warm-Up Drift

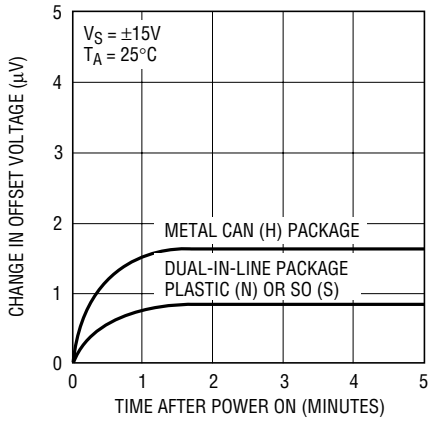

LT1012A • TPC07

Long Term Stability of Four Representative Units

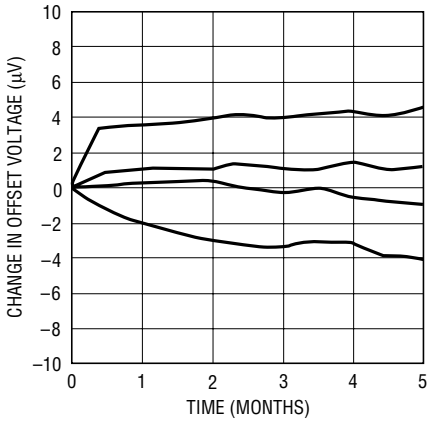

LT1012A • TPC08

Offset Voltage Drift with Temperature of Four Representative Units

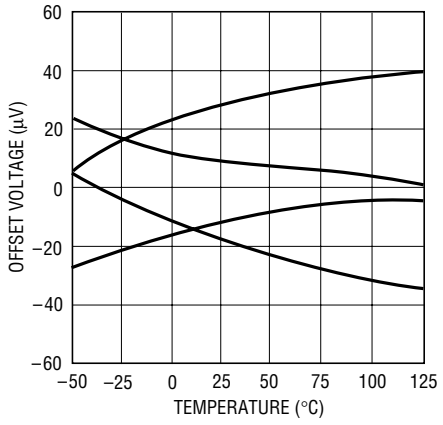

LT1012A • TPC09

TYPICAL PERFORMANCE CHARACTERISTICS

0.1Hz to 10Hz Noise

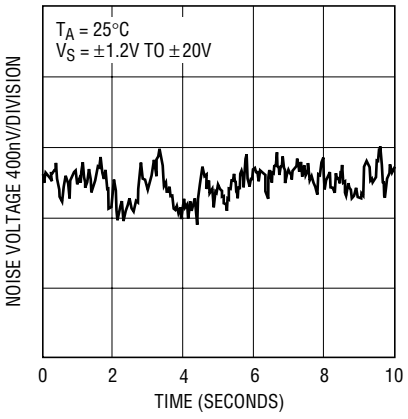

LT1012A • TPC10

Noise Spectrum

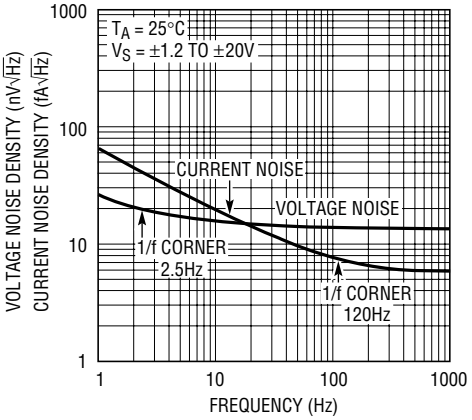

LT1012A • TPC11

Total Noise vs Source Resistance

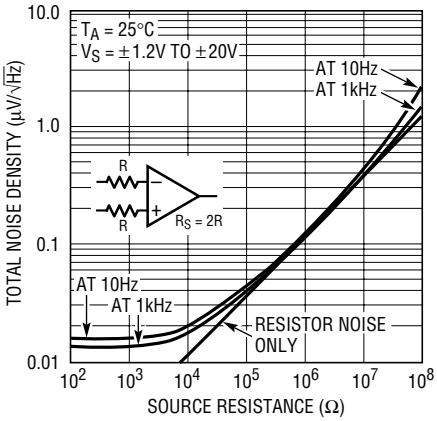

LT1012A • TPC12

Supply Current vs Supply Voltage

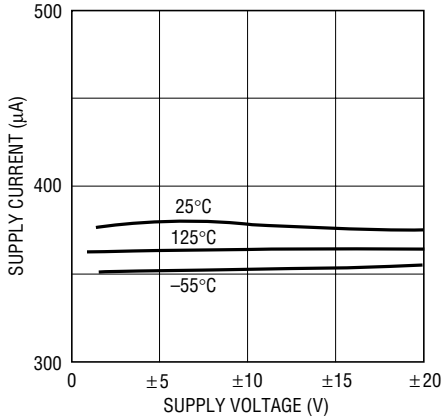

LT1012A • TPC13

Common Mode Rejection vs Frequency

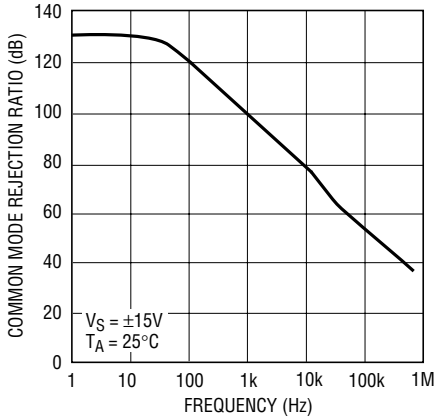

LT1012A • TPC14

Power Supply Rejection vs Frequency

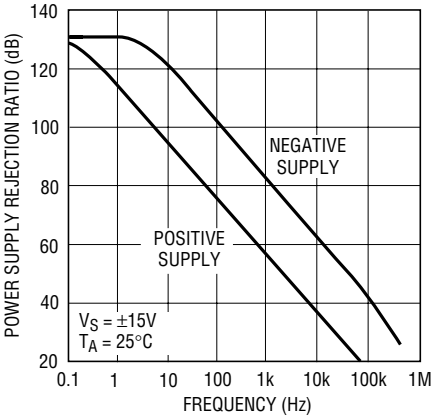

LT1012A • TPC15

Voltage Gain vs Frequency

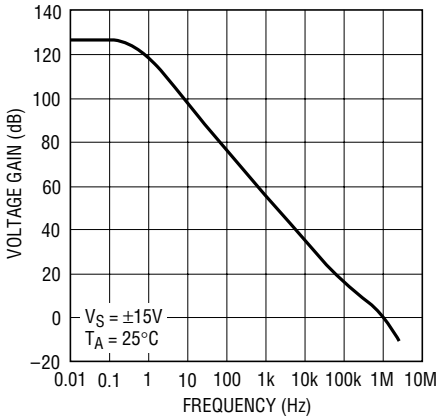

LT1012A • TPC16

Gain, Phase Shift vs Frequency

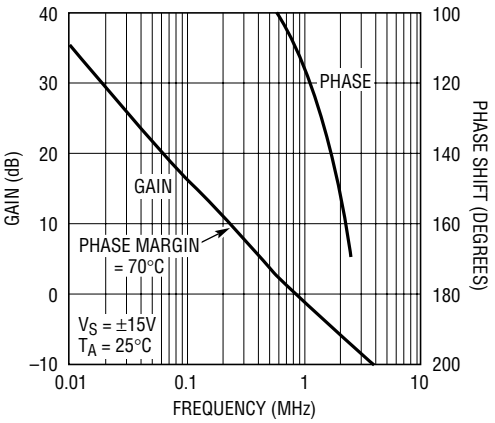

LT1012A • TPC17

Voltage Gain vs Load Resistance

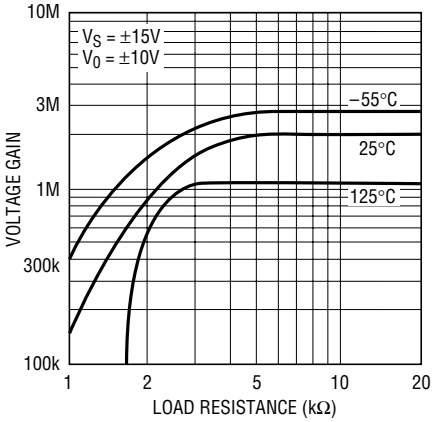

LT1012A • TPC18

TYPICAL PERFORMANCE CHARACTERISTICS

Small-Signal Transient Response

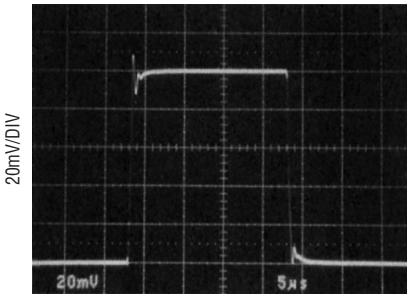

A_V = +1
C_{LOAD} = 100pF
5µs/DIV

Small-Signal Transient Response

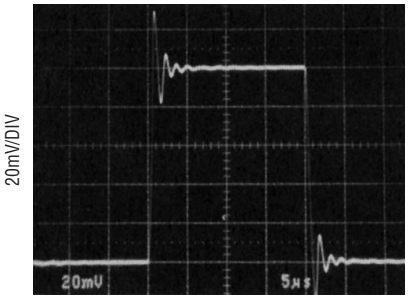

A_V = +1
C_{LOAD} = 1000pF
5µs/DIV

Large-Signal Transient Response

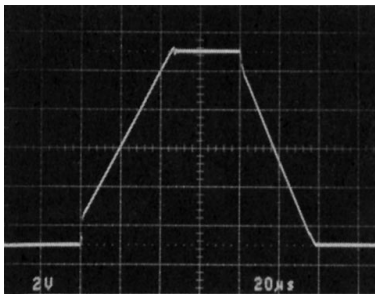

A_V = +1
20µs/DIV

Output Short-Circuit Current vs Time

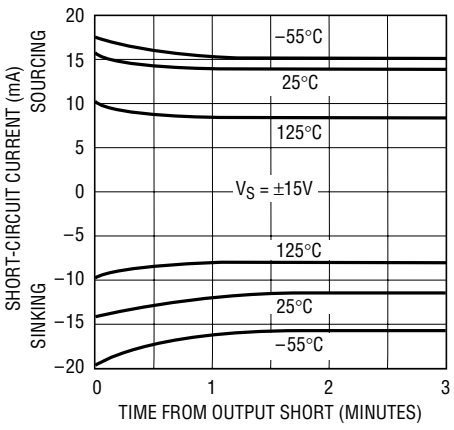

LT1012A • TPC19

Slew Rate, Gain Bandwidth Product vs Overcompensation Capacitor

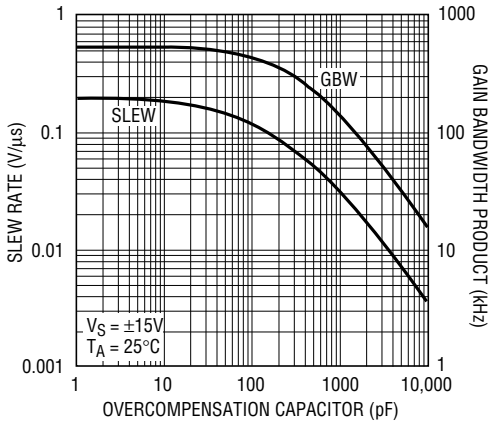

LT1012A • TPC20

Closed-Loop Output Impedance

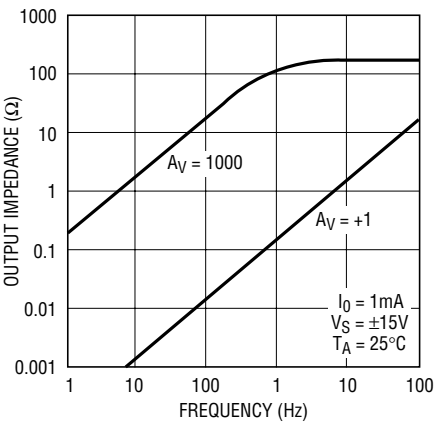

LT1012A • TPC21

Common Mode Range and Voltage Swing at Minimum Supply Voltage

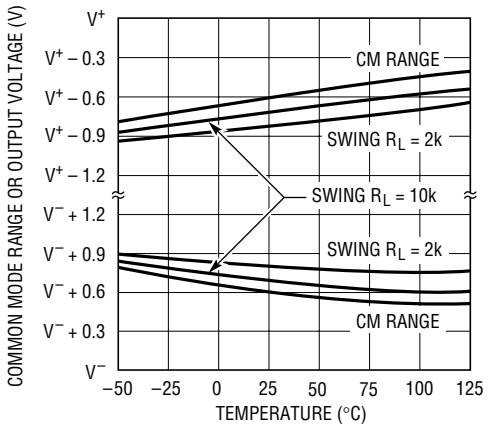

LT1012A • TPC22

Minimum Supply Voltage, Voltage Gain at V_{MIN}

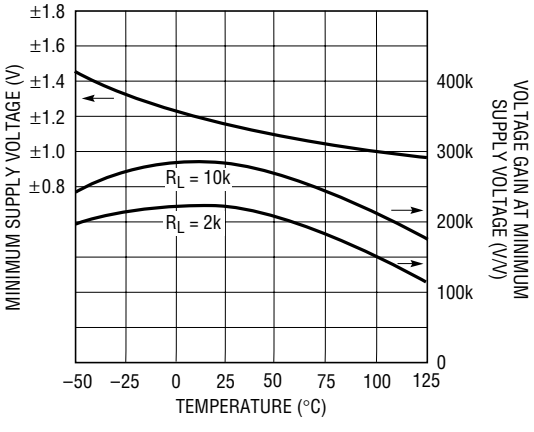

LT1012A • TPC23

APPLICATIONS INFORMATION

The LT1012 may be inserted directly into OP-07, LM11, 108A or 101A sockets with or without removal of external frequency compensation or nulling components. The LT1012 can also be used in 741, LF411, LF156 or OP-15 applications provided that the nulling circuitry is removed.

Although the OP-97 is a copy of the LT1012, the LT1012 directly replaces and upgrades OP-97 applications. The LT1012C and D have lower offset voltage and drift than the OP-97F. The LT1012A has lower supply current than the OP-97A/E. In addition, all LT1012 grades guarantee operation at ±1.2V supplies.

Achieving Picoampere/Microvolt Performance

In order to realize the picoampere/microvolt level accuracy of the LT1012, proper care must be exercised. For example, leakage currents in circuitry external to the op amp can significantly degrade performance. High quality insulation should be used (e.g. Teflon, Kel-F); cleaning of all insulating surfaces to remove fluxes and other residues will probably be required. Surface coating may be necessary to provide a moisture barrier in high humidity environments.

Board leakage can be minimized by encircling the input circuitry with a guard ring operated at a potential close to that of the inputs: in inverting configurations the guard ring should be tied to ground, in non-inverting connections to the inverting input at Pin 2. Guarding both sides of the printed circuit board is required. Bulk leakage reduction depends on the guard ring width. Nanoampere level leakage into the offset trim terminals can affect offset voltage and drift with temperature.

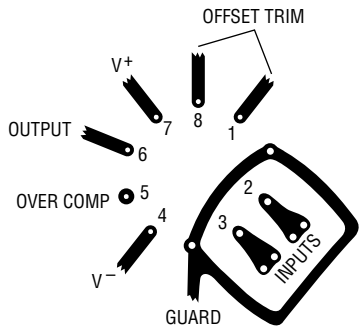

LT1012A * AI01

Microvolt level error voltages can also be generated in the external circuitry. Thermocouple effects caused by temperature gradients across dissimilar metals at the contacts to the input terminals can exceed the inherent drift of the amplifier. Air currents over device leads should be minimized, package leads should be short, and the two input leads should be as close together as possible and maintained at the same temperature.

Noise Testing

For application information on noise testing and calculations, please see the LT1008 data sheet.

Frequency Compensation

The LT1012 can be overcompensated to improve capacitive load handling capability or to narrow noise bandwidth. In many applications, the feedback loop around the amplifier has gain (e.g. logarithmic amplifiers); overcompensation can stabilize these circuits with a single capacitor.

The availability of the compensation terminal permits the use of feedforward frequency compensation to enhance slew rate. The voltage follower feedforward scheme bypasses the amplifier's gain stages and slews at nearly 10V/μs.

The inputs of the LT1012 are protected with back-to-back diodes. Current limiting resistors are not used, because the leakage of these resistors would prevent the realization of picoampere level bias currents at elevated temperatures. In the voltage follower configuration, when the input is driven by a fast, large signal pulse (>1V), the input protection diodes effectively short the output to the input during slewing, and a current, limited only by the output short-circuit protection will flow through the diodes.

The use of a feedback resistor, as shown in the voltage follower feedforward diagram, is recommended because this resistor keeps the current below the short-circuit limit, resulting in faster recovery and settling of the output.

APPLICATIONS INFORMATION

Test Circuit for Offset Voltage and its Drift with Temperature

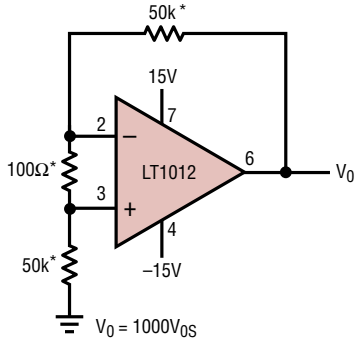

*RESISTORS MUST HAVE LOW THERMOELECTRIC POTENTIAL

LT1012A • AI02

Follower Feedforward Compensation

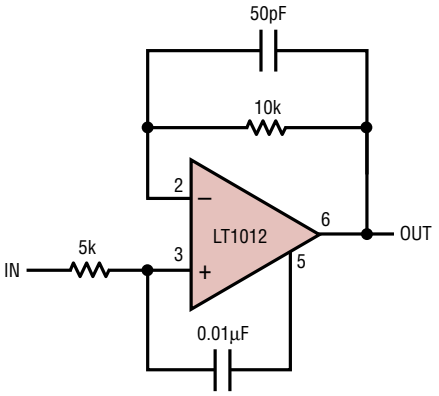

LT1012A • AI03

Pulse Response of Feedforward Compensation

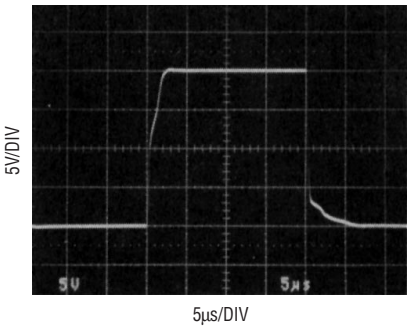

TYPICAL APPLICATIONS

Ampmeter with Six Decade Range

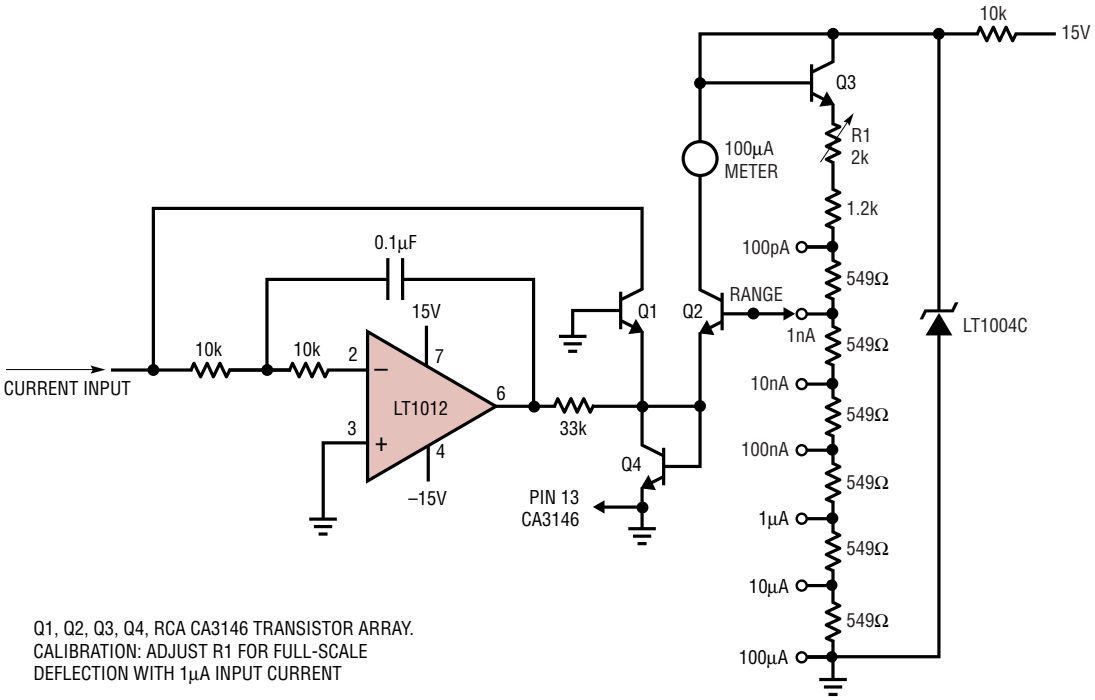

Q1, Q2, Q3, Q4, RCA CA3146 TRANSISTOR ARRAY.
CALIBRATION: ADJUST R1 FOR FULL-SCALE DEFLECTION WITH 1µA INPUT CURRENT

AMPMETER MEASURES CURRENTS FROM 100pA TO 100µA WITHOUT THE USE OF EXPENSIVE HIGH VALUE RESISTORS. ACCURACY AT 100µA IS LIMITED BY THE OFFSET VOLTAGE BETWEEN Q1 AND Q2 AND, AT 100pA, BY THE INVERTING BIAS CURRENT OF THE LT1012

LT1012A • TA03

TYPICAL APPLICATIONS

Saturated Standard Cell Amplifier

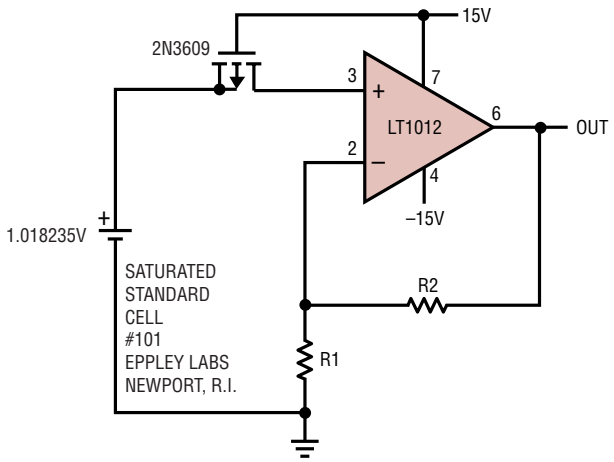

THE TYPICAL 30pA BIAS CURRENT OF THE LT1012 WILL DEGRADE THE STANDARD CELL BY ONLY 1ppm/YEAR. NOISE IS A FRACTION OF A ppm. UNPROTECTED GATE MOSFET ISOLATES STANDARD CELL ON POWER DOWN

LT1012A • TA05

Amplifier for Bridge Transducers

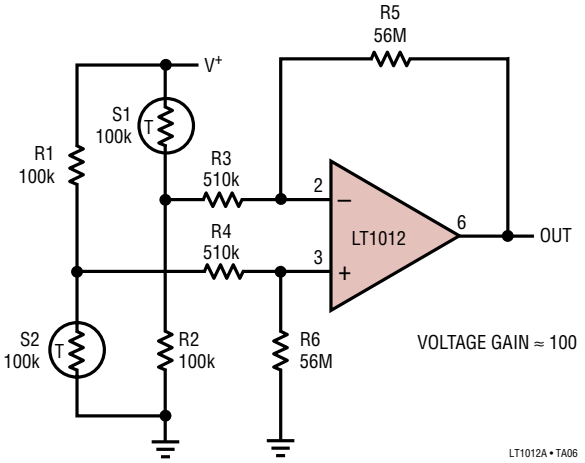

LT1012A • TA06

TYPICAL APPLICATIONS

Amplifier for Photodiode Sensor

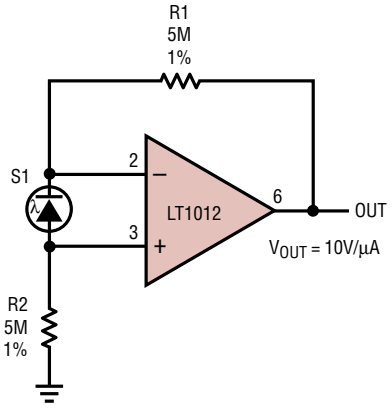

Buffered Reference for A-to-D Converters

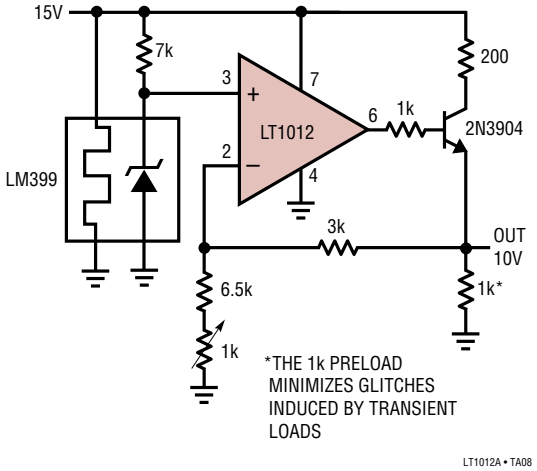

Instrumentation Amplifier with ±100V Common Mode Range

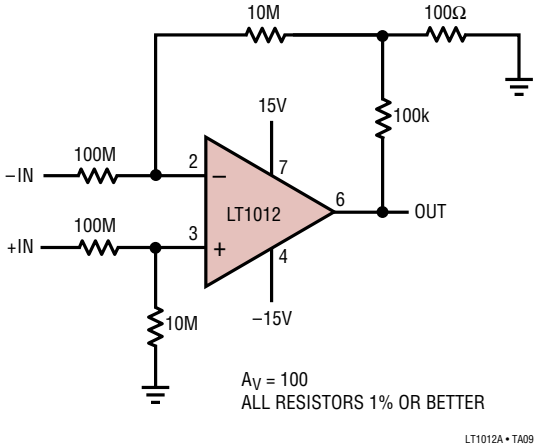

Low Power Comparator with <10μV Hysteresis

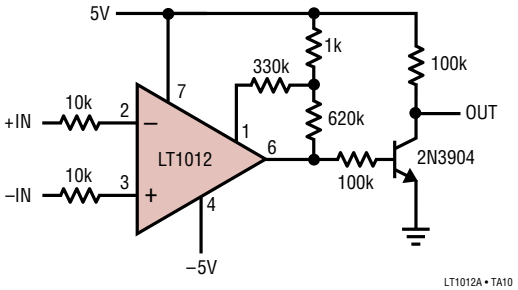

TYPICAL APPLICATIONS

Air Flow Detector

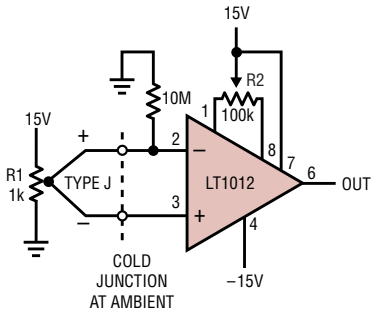

MOUNT R1 IN AIRFLOW.
ADJUST R2 SO OUTPUT GOES
HIGH WHEN AIRFLOW STOPS

LT1012A • TA11

Input Amplifier for 4.5 Digit Voltmeter

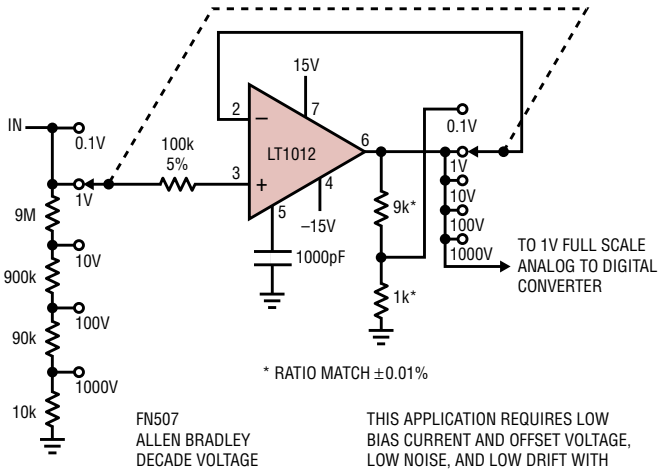

* RATIO MATCH ±0.01%

FN507
ALLEN BRADLEY
DECADE VOLTAGE
DIVIDER

THIS APPLICATION REQUIRES LOW
BIAS CURRENT AND OFFSET VOLTAGE,
LOW NOISE, AND LOW DRIFT WITH
TIME AND TEMPERATURE

LT1012A • TA12

Resistor Multiplier

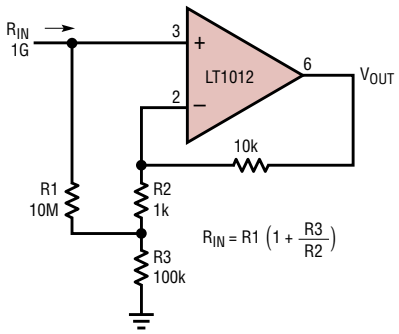

LT1012 • TA13

"No Trims" 12-Bit Multiplying DAC Output Amplifier

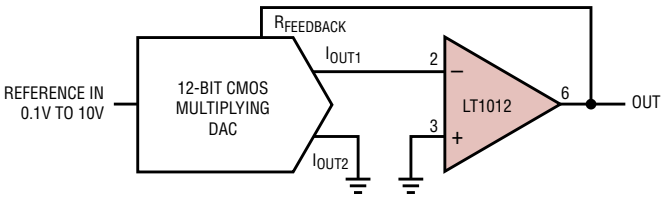

WHEN THE REFERENCE INPUT DROPS TO 0.1V,
THE LEAST SIGNIFICANT BIT DECREASES TO
THE MICROVOLT/PICOAMPERE RANGE

LT1012 • TA14

SCHEMATIC DIAGRAM

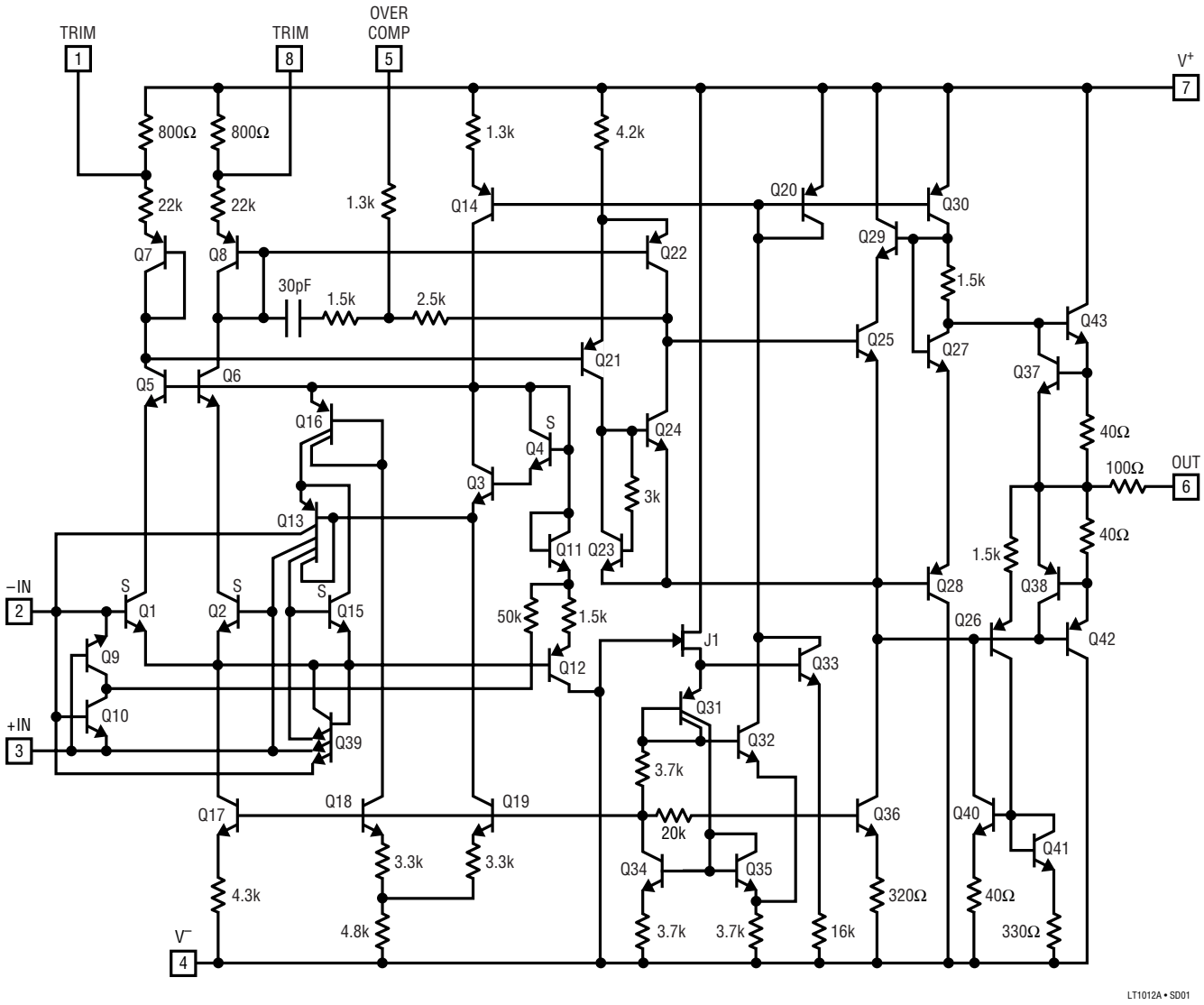

PACKAGE DESCRIPTION

H Package
8-Lead TO-5 Metal Can (.200 Inch PCD)
(Reference LTC DWG # 05-08-1320)

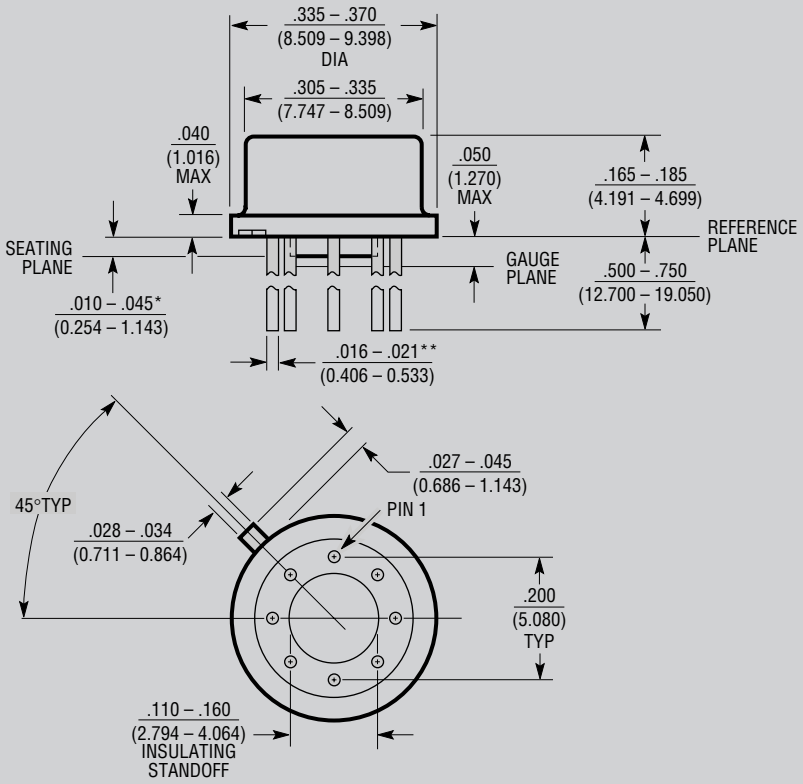

*LEAD DIAMETER IS UNCONTROLLED BETWEEN THE REFERENCE PLANE AND THE SEATING PLANE

**FOR SOLDER DIP LEAD FINISH, LEAD DIAMETER IS .016 – .024 (0.406 – 0.610)

H8(TO-5) 0.200 PCD 0801

OBSOLETE PACKAGE

PACKAGE DESCRIPTION

N8 Package
8-Lead PDIP (Narrow .300 Inch)
(Reference LTC DWG # 05-08-1510)

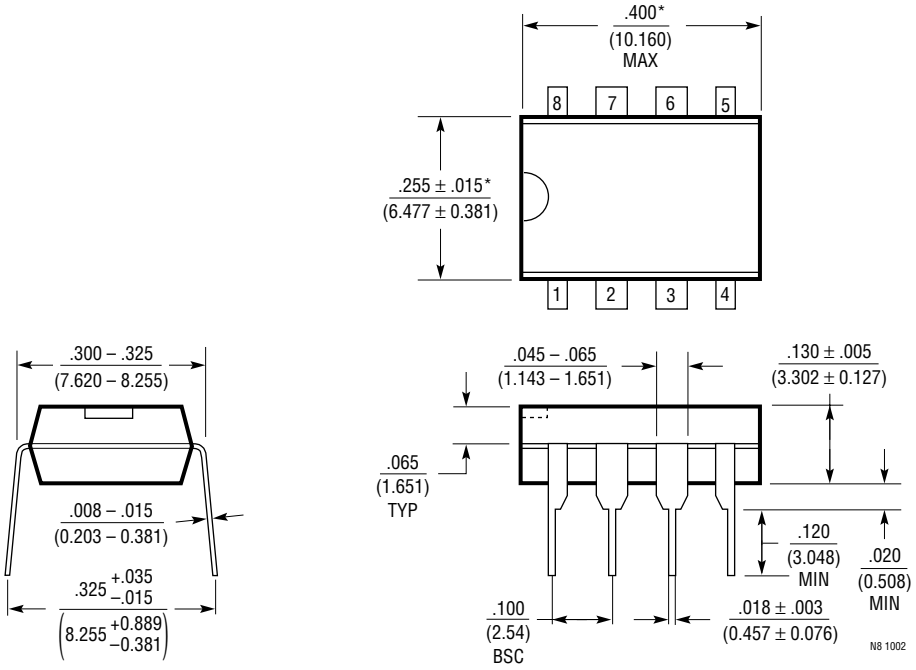

NOTE:
1. DIMENSIONS ARE INCHES / MILLIMETERS

*THESE DIMENSIONS DO NOT INCLUDE MOLD FLASH OR PROTRUSIONS.
MOLD FLASH OR PROTRUSIONS SHALL NOT EXCEED .010 INCH (0.254mm)

PACKAGE DESCRIPTION

S8 Package
8-Lead Plastic Small Outline (Narrow .150 Inch)
(Reference LTC DWG # 05-08-1610)

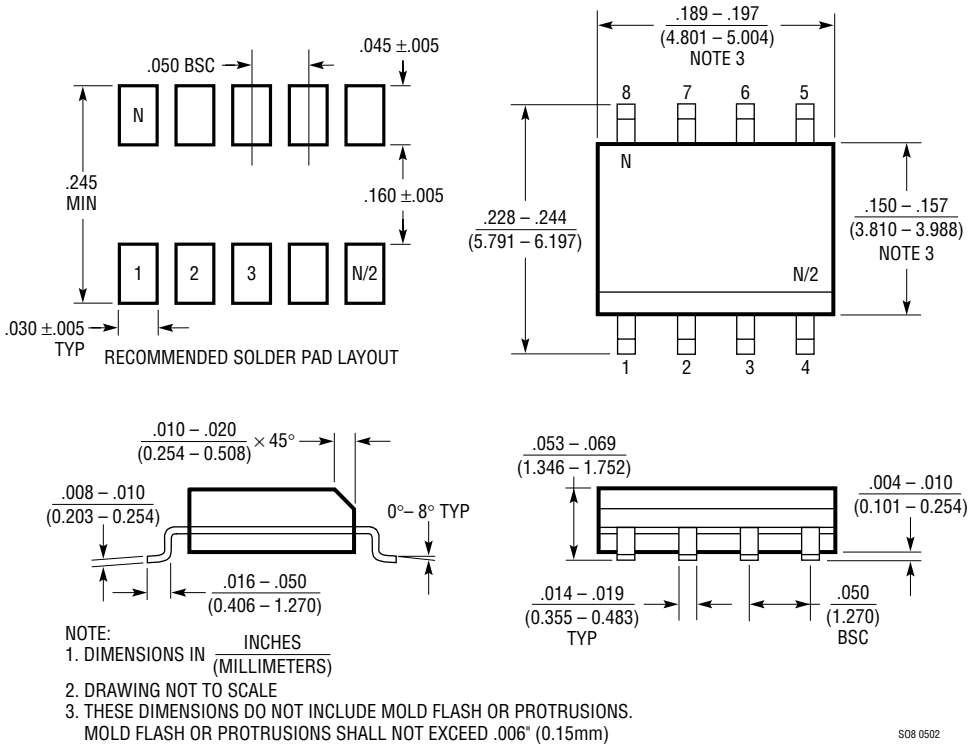

NOTE:
1. DIMENSIONS IN $\frac{\text{INCHES}}{(\text{MILLIMETERS})}$
2. DRAWING NOT TO SCALE
3. THESE DIMENSIONS DO NOT INCLUDE MOLD FLASH OR PROTRUSIONS.
   MOLD FLASH OR PROTRUSIONS SHALL NOT EXCEED .006" (0.15mm)

SO8 0502

Information furnished by Linear Technology Corporation is believed to be accurate and reliable. However, no responsibility is assumed for its use. Linear Technology Corporation makes no representation that the interconnection of its circuits as described herein will not infringe on existing patent rights.

TYPICAL APPLICATION

Kelvin-Sensed Platinum Temperature Sensor Amplifier

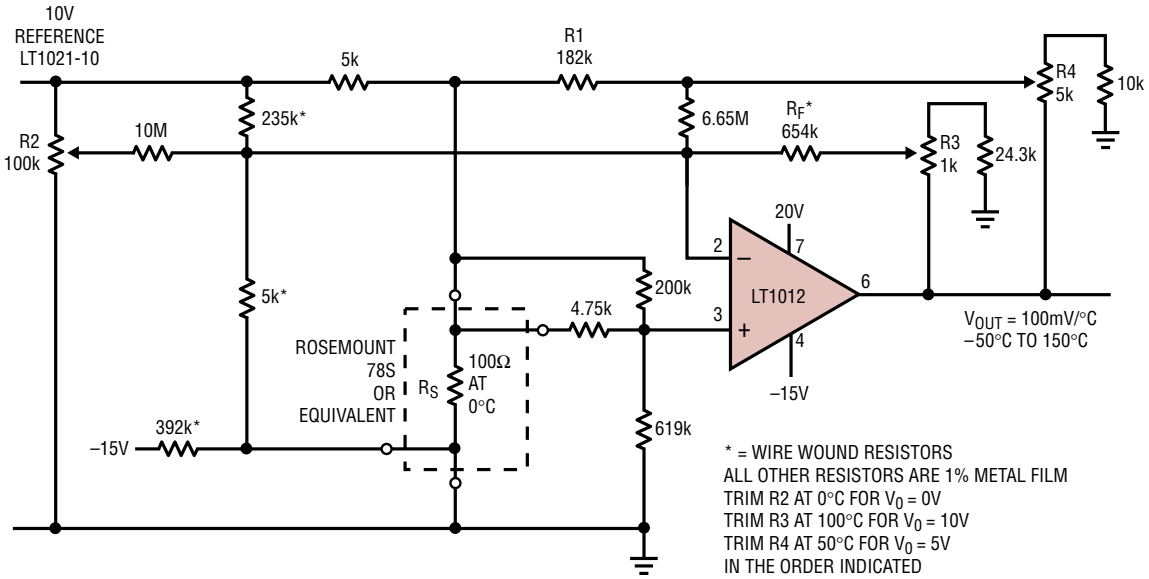

* = WIRE WOUND RESISTORS
ALL OTHER RESISTORS ARE 1% METAL FILM
TRIM R2 AT 0°C FOR V_0 = 0V
TRIM R3 AT 100°C FOR V_0 = 10V
TRIM R4 AT 50°C FOR V_0 = 5V
IN THE ORDER INDICATED

POSITIVE FEEDBACK (R1) LINEARIZES THE INHERENT PARABOLIC NONLINEARITY OF THE PLATINUM SENSOR AND REDUCES ERRORS FROM 1.2°C TO 0.004°C OVER THE –50°C TO 150°C RANGE

LT1012A • TA04

Linear Technology Corporation
1630 McCarthy Blvd., Milpitas, CA 95035-7417
(408) 432-1900 • FAX: (408) 434-0507 • www.linear.com

LW/TP 1202 1K REV B • PRINTED IN USA

©LINEAR TECHNOLOGY CORPORATION 1991