Major League Electronics .100 cl Low Profile Side Wipe Socket Strip

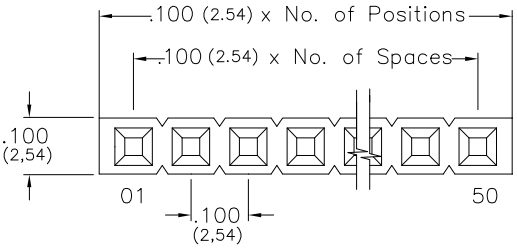

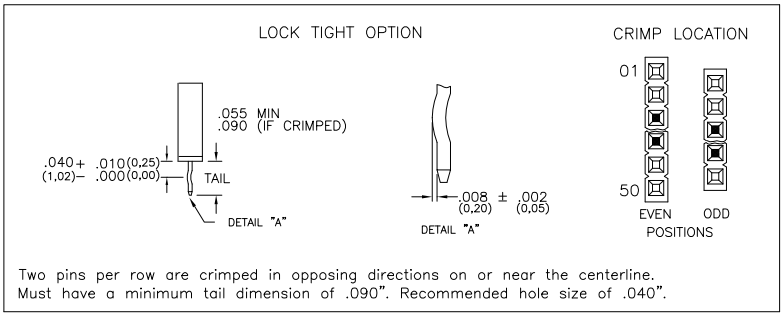

Two pins per row are crimped in opposing directions on or near the centerline.
Must have a minimum tail dimension of .090". Recommended hole size of .040".

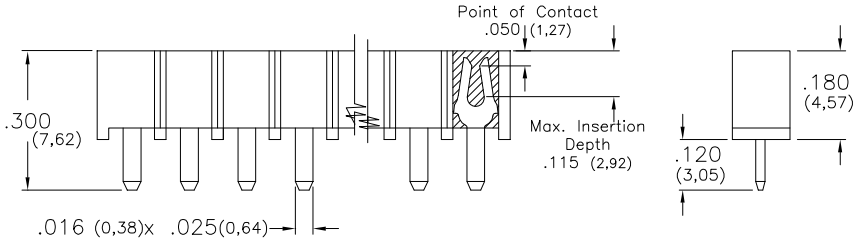

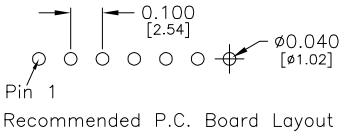

Tails may be clipped to achieve desired pin length

Ordering Information

LSWSS-1 [XX] – [S] – [02] – [XX] – [XX] – [XXX] – [X] – [LF]

- **Pins Per Row** (XX): 01 - 50
- **Row Specification** (S): S = Single Row
- **Pin Style** (02):

Pin Style	
.120 (3.05) - Tail/Foot	02

- **Plating Options** (XX):

Plating Options	
- 10µ Gold on Contact area/Flash on Tail	G
- Matte Tin all Over	T
- 10µ Gold on Contact Area / Matte Tin on Tail	GT
- 30µ Gold on Contact Area / Matte Tin on Tail	H
- Gold Flash over Entire Pin	F

- **Lock Tight "LT" (Optional)** (XX): Leave blank if not needed; LT = With
- **Polarized Position** (XXX): Leave blank if not needed; If required, specify empty pin position, e.g. 012 for Pin 12
- **Every Other Pin Filled** (X): Leave blank if not needed; E = Filled
- **Lead Free** (LF)

Specifications
Insertion Depth: .085 (2,16mm) to .115 (2,92mm)
Insertion Force - Per Contact:
12oz. Aug (3,34N) with .025 (0,64mm) sq. pin
Withdrawal Force - Per Contact:
6oz. Aug (1,67N) with .025 (0,64mm) sq. pin
Current Rating: 3.0 Ampere
Insulation Resistance: 1000MΩ Min.
Dielectric Withstanding: 600V AC
Contact Resistance: 10 mΩ Max.
Operating Temperature: -40°C to + 105°C
Max. Process Temperature:
Peak: 260°C up to 20 secs.
Process: 230°C up to 60 secs.
Wave: 260°C up to 6 secs.
Manual Solder: 350°C up to 5 secs.

Materials
Contact Material: Phosphor Bronze
Insulator Material: Nylon 6T
Plating: Au or Sn over 50µ" (1,27) Ni

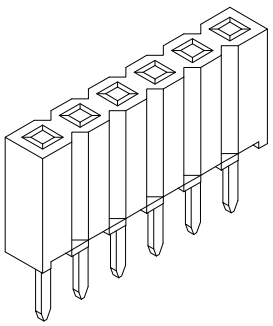

Mates with:
BSTC, BSTCM, BSTCR, BSTCRSM, BSTS, LBSTCM, LTSHCR, LTSHCRE, LTSHR, LTSHRE, LTSHSM, TSHC, TSHCR, TSHCRE, TSHCRSM, TSHR, TSHRE, TSHS, TSHSCM, TSHSM, ULTSHSM, ULTSHC, ULTHSCR

Products cut to specific sizes are uncancellable/nonreturnable | Parts are subject to change without notice

LSWSS-1-S-02 SERIES	.100 cl Single Row Side Wipe Socket Strip	16 JAN 07	Scale NTS

UNLESS OTHERWISE SPECIFIED DIMENSIONS IN INCHES (MM) TOLERANCES ARE:
ONE PLACE DECIMALS ±.100
TWO PLACE DECIMALS ±.010
THREE PLACE DECIMALS ±.005
FOUR PLACE DECIMALS ±.0020
ANGLES ±5'

Major League ELECTRONICS

4235 Earnings Way, New Albany, Indiana, 47150, USA
1-800-782-3486 (USA/Canada/Mexico)
Tel: 812-944-7244
Fax: 812-944-7268
E-mail: mle@mlelectronics.com
Web: www.mlelectronics.com

Edition B

Revisions

Revision B - 27th May 2010

Plastic height dimension - conversion amended
previously .180 (6,73)
now .180 (4,57)

LSWSS-1-S-02 SERIES	.100 cl Single Row Side Wipe Socket Strip	16 JAN 07	Scale NTS

UNLESS OTHERWISE SPECIFIED
DIMENSIONS IN INCHES (MM)
TOLERANCES ARE:

ONE PLACE DECIMALS ±.100
TWO PLACE DECIMALS ±.010
THREE PLACE DECIMALS ±.005
FOUR PLACE DECIMALS ±.0020
ANGLES
±5°

Major League ELECTRONICS

4235 Earnings Way, New Albany, Indiana, 47150, USA
1-800-782-3486 (USA/Canada/Mexico)
Tel: 812-944-7244
Fax: 812-944-7268
E-mail: mle@mlelectronics.com
Web: www.mlelectronics.com

Edition
B