LSM9DS1

iNEMO inertial module: 3D accelerometer, 3D gyroscope, 3D magnetometer

Datasheet - production data

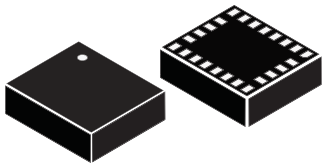

LGA-24L (3.5x3x1.0 mm)

Features

- 3 acceleration channels, 3 angular rate channels, 3 magnetic field channels
- ±2/±4/±8/±16 *g* linear acceleration full scale
- ±4/±8/±12/±16 gauss magnetic full scale
- ±245/±500/±2000 dps angular rate full scale
- 16-bit data output
- SPI / I^2C serial interfaces
- Analog supply voltage 1.9 V to 3.6 V
- “Always-on” eco power mode down to 1.9 mA
- Programmable interrupt generators
- Embedded temperature sensor
- Embedded FIFO
- Position and motion detection functions
- Click/double-click recognition
- Intelligent power saving for handheld devices
- ECOPACK®, RoHS and “Green” compliant

Applications

- Indoor navigation
- Smart user interfaces
- Advanced gesture recognition
- Gaming and virtual reality input devices
- Display/map orientation and browsing

Description

The LSM9DS1 is a system-in-package featuring a 3D digital linear acceleration sensor, a 3D digital angular rate sensor, and a 3D digital magnetic sensor.

The LSM9DS1 has a linear acceleration full scale of ±2*g*/±4*g*/±8/±16 *g,* a magnetic field full scale of ±4/±8/±12/±16 gauss and an angular rate of ±245/±500/±2000 dps.

The LSM9DS1 includes an I^2C serial bus interface supporting standard and fast mode (100 kHz and 400 kHz) and an SPI serial standard interface.

Magnetic, accelerometer and gyroscope sensing can be enabled or set in power-down mode separately for smart power management.

The LSM9DS1 is available in a plastic land grid array package (LGA) and it is guaranteed to operate over an extended temperature range from -40 °C to +85 °C.

Table 1. Device summary

Part number	Temperature range [°C]	Package	Packing
LSM9DS1	-40 to +85	LGA-24L	Tray
LSM9DS1TR	-40 to +85	LGA-24L	Tape and reel

This is information on a product in full production. www.st.com

Contents

1 **Pin description** 10

2 **Module specifications** 12

2.1 Sensor characteristics 12

2.2 Electrical characteristics 13

2.2.1 Recommended power-up sequence 14

2.3 Temperature sensor characteristics 14

2.4 Communication interface characteristics 15

2.4.1 SPI - serial peripheral interface 15

2.4.2 I^2C - inter-IC control interface 16

2.5 Absolute maximum ratings 17

2.6 Terminology 18

2.6.1 Sensitivity 18

2.6.2 Zero-g, zero-rate and zero-gauss level 18

3 **LSM9DS1 functionality** 19

3.1 Operating modes 19

3.2 Gyroscope power modes 19

3.3 Accelerometer and gyroscope multiple reads (burst) 21

3.4 Block diagram 22

3.5 Accelerometer and gyroscope FIFO 23

3.5.1 Bypass mode 23

3.5.2 FIFO mode 24

3.5.3 Continuous mode 24

3.5.4 Continuous-to-FIFO mode 25

3.5.5 Bypass-to-Continuous mode 26

4 **Application hints** 27

4.1 External capacitors 27

5 **Digital interfaces** 28

5.1 I^2C serial interface 28

5.1.1 I^2C operation 29

5.2 Accelerometer and gyroscope SPI bus interface 31
5.2.1 SPI read 32
5.2.2 SPI write 33
5.2.3 SPI read in 3-wire mode 33
5.3 Magnetic sensor SPI bus interface 34
5.3.1 SPI read 35
5.3.2 SPI write 36
5.3.3 SPI read in 3-wire mode 37

6 Register mapping 38

7 Accelerometer and gyroscope register description 41
7.1 ACT_THS (04h) 41
7.2 ACT_DUR (05h) 41
7.3 INT_GEN_CFG_XL (06h) 41
7.4 INT_GEN_THS_X_XL (07h) 42
7.5 INT_GEN_THS_Y_XL (08h) 42
7.6 INT_GEN_THS_Z_XL (09h) 43
7.7 INT_GEN_DUR_XL (0Ah) 43
7.8 REFERENCE_G (0Bh) 43
7.9 INT1_CTRL (0Ch) 43
7.10 INT2_CTRL (0Dh) 44
7.11 WHO_AM_I (0Fh) 45
7.12 CTRL_REG1_G (10h) 45
7.13 CTRL_REG2_G (11h) 47
7.14 CTRL_REG3_G (12h) 47
7.15 ORIENT_CFG_G (13h) 48
7.16 INT_GEN_SRC_G (14h) 48
7.17 OUT_TEMP_L (15h), OUT_TEMP_H (16h) 49
7.18 STATUS_REG (17h) 49
7.19 OUT_X_G (18h - 19h) 50
7.20 OUT_Y_G (1Ah - 1Bh) 50
7.21 OUT_Z_G (1Ch - 1Dh) 50
7.22 CTRL_REG4 (1Eh) 50

7.23 CTRL_REG5_XL (1Fh) 51
7.24 CTRL_REG6_XL (20h) 51
7.25 CTRL_REG7_XL (21h) 52
7.26 CTRL_REG8 (22h) 53
7.27 CTRL_REG9 (23h) 54
7.28 CTRL_REG10 (24h) 54
7.29 INT_GEN_SRC_XL (26h) 54
7.30 STATUS_REG (27h) 55
7.31 OUT_X_XL (28h - 29h) 56
7.32 OUT_Y_XL (2Ah - 2Bh) 56
7.33 OUT_Z_XL (2Ch - 2Dh) 56
7.34 FIFO_CTRL (2Eh) 56
7.35 FIFO_SRC (2Fh) 57
7.36 INT_GEN_CFG_G (30h) 57
7.37 INT_GEN_THS_X_G (31h - 32h) 58
7.38 INT_GEN_THS_Y_G (33h - 34h) 59
7.39 INT_GEN_THS_Z_G (35h - 36h) 59
7.40 INT_GEN_DUR_G (37h) 59

8 Magnetometer register description 62

8.1 OFFSET_X_REG_L_M (05h), OFFSET_X_REG_H_M (06h) 62
8.2 OFFSET_Y_REG_L_M (07h), OFFSET_Y_REG_H_M (08h) 62
8.3 OFFSET_Z_REG_L_M (09h), OFFSET_Z_REG_H_M (0Ah) 62
8.4 WHO_AM_I_M (0Fh) 63
8.5 CTRL_REG1_M (20h) 63
8.6 CTRL_REG2_M (21h) 64
8.7 CTRL_REG3_M (22h) 64
8.8 CTRL_REG4_M (23h) 65
8.9 CTRL_REG5_M (24h) 65
8.10 STATUS_REG_M (27h) 66
8.11 OUT_X_L_M (28h), OUT_X_H_M(29h) 66
8.12 OUT_Y_L_M (2Ah), OUT_Y_H_M (2Bh) 66
8.13 OUT_Z_L_M (2Ch), OUT_Z_H_M (2Dh) 66

8.14 INT_CFG_M (30h) 67
8.15 INT_SRC_M (31h) 67
8.16 INT_THS_L(32h), INT_THS_H(33h) 68

9 Package information 69
9.1 Soldering information 69
9.2 LGA package information 69

10 Revision history 71

List of tables

Table 1. Device summary . . . 1
Table 2. Pin description . . . 11
Table 3. Sensor characteristics . . . 12
Table 4. Electrical characteristics . . . 13
Table 5. Temperature sensor characteristics . . . 14
Table 6. SPI slave timing values . . . 15
Table 7. I^2C slave timing values . . . 16
Table 8. Absolute maximum ratings . . . 17
Table 9. Gyroscope operating modes . . . 20
Table 10. Operating mode current consumption . . . 20
Table 11. Accelerometer turn-on time . . . 20
Table 12. Gyroscope turn-on time . . . 21
Table 13. Serial interface pin description . . . 28
Table 14. I^2C terminology . . . 28
Table 15. Transfer when master is writing one byte to slave . . . 29
Table 16. Transfer when master is writing multiple bytes to slave . . . 29
Table 17. Transfer when master is receiving (reading) one byte of data from slave . . . 29
Table 18. Transfer when master is receiving (reading) multiple bytes of data from slave . . . 29
Table 19. Accelerometer and gyroscope SAD+Read/Write patterns . . . 30
Table 20. Magnetic sensor SAD+Read/Write patterns . . . 30
Table 21. Accelerometer and gyroscope register address map . . . 38
Table 22. Magnetic sensor register address map . . . 40
Table 23. ACT_THS register . . . 41
Table 24. ACT_THS register description . . . 41
Table 25. ACT_DUR register . . . 41
Table 26. ACT_DUR register description . . . 41
Table 27. INT_GEN_CFG_XL register . . . 41
Table 28. INT_GEN_CFG_XL register description . . . 42
Table 29. INT_GEN_THS_X_XL register . . . 42
Table 30. INT_GEN_THS_X_XL register description . . . 42
Table 31. INT_GEN_THS_Y_XL register . . . 42
Table 32. INT_GEN_THS_Y_XL register description . . . 42
Table 33. INT_GEN_THS_Z_XL register . . . 43
Table 34. INT_GEN_THS_Z_XL register description . . . 43
Table 35. INT_GEN_DUR_XL register . . . 43
Table 36. INT_GEN_DUR_XL register description . . . 43
Table 37. REFERENCE_G register . . . 43
Table 38. REFERENCE_G register description . . . 43
Table 39. INT1_CTRL register . . . 43
Table 40. INT1_CTRL register description . . . 44
Table 41. INT2_CTRL register . . . 44
Table 42. INT2_CTRL register description . . . 44
Table 43. WHO_AM_I register . . . 45
Table 44. CTRL_REG1_G register . . . 45
Table 45. CTRL_REG1_G register description . . . 45
Table 46. ODR and BW configuration setting (after LPF1) . . . 45
Table 47. ODR and BW configuration setting (after LPF2) . . . 46
Table 48. CTRL_REG2_G register . . . 47

Table 49. CTRL_REG2_G register description . . . 47
Table 50. CTRL_REG3_G register . . . 47
Table 51. CTRL_REG3_G register description . . . 47
Table 52. Gyroscope high-pass filter cutoff frequency configuration [Hz] . . . 48
Table 53. ORIENT_CFG_G register . . . 48
Table 54. ORIENT_CFG_G register description . . . 48
Table 55. INT_GEN_SRC_G register . . . 48
Table 56. INT_GEN_SRC_G register description . . . 49
Table 57. OUT_TEMP_L register . . . 49
Table 58. OUT_TEMP_H register . . . 49
Table 59. OUT_TEMP register description . . . 49
Table 60. STATUS_REG register . . . 49
Table 61. STATUS_REG register description . . . 50
Table 62. CTRL_REG4 register . . . 50
Table 63. CTRL_REG4 register description . . . 51
Table 64. CTRL_REG5_XL register . . . 51
Table 65. CTRL_REG5_XL register description . . . 51
Table 66. CTRL_REG6_XL register . . . 51
Table 67. CTRL_REG6_XL register description . . . 52
Table 68. ODR register setting (accelerometer only mode) . . . 52
Table 69. CTRL_REG7_XL register . . . 52
Table 70. CTRL_REG7_XL register description . . . 53
Table 71. Low pass cutoff frequency in high resolution mode (HR = 1) . . . 53
Table 72. CTRL_REG8 register . . . 53
Table 73. CTRL_REG8 register description . . . 53
Table 74. CTRL_REG9 register . . . 54
Table 75. CTRL_REG9 register description . . . 54
Table 76. CTRL_REG10 register . . . 54
Table 77. CTRL_REG10 register description . . . 54
Table 78. INT_GEN_SRC_XL register . . . 54
Table 79. INT_GEN_SRC_XL register description . . . 55
Table 80. STATUS_REG register . . . 55
Table 81. STATUS_REG register description . . . 55
Table 82. FIFO_CTRL register . . . 56
Table 83. FIFO_CTRL register description . . . 56
Table 84. FIFO mode selection . . . 56
Table 85. FIFO_SRC register . . . 57
Table 86. FIFO_SRC register description . . . 57
Table 87. FIFO_SRC example: OVR/FSS details . . . 57
Table 88. INT_GEN_CFG_G register . . . 57
Table 89. INT_GEN_CFG_G register description . . . 58
Table 90. INT_GEN_THS_XH_G register . . . 58
Table 91. INT_GEN_THS_XL_G register . . . 58
Table 92. INT_GEN_THS_X_G register description . . . 58
Table 93. INT_GEN_THS_YH_G register . . . 59
Table 94. INT_GEN_THS_YL_G register . . . 59
Table 95. INT_GEN_THS_Y_G register description . . . 59
Table 96. INT_GEN_THS_ZH_G register . . . 59
Table 97. INT_GEN_THS_ZL_G register . . . 59
Table 98. INT_GEN_THS_Z_G register description . . . 59
Table 99. INT_GEN_DUR_G register . . . 59
Table 100. INT_GEN_DUR_G register description . . . 60

Table 101. OFFSET_X_REG_L_M register . . . 62
Table 102. OFFSET_X_REG_H_M register . . . 62
Table 103. OFFSET_Y_REG_L_M register . . . 62
Table 104. OFFSET_Y_REG_H_M register . . . 62
Table 105. OFFSET_Z_REG_L_M register . . . 62
Table 106. OFFSET_Z_REG_H_M register . . . 62
Table 107. WHO_AM_I_M register . . . 63
Table 108. CTRL_REG1_M register . . . 63
Table 109. CTRL_REG1_M register description . . . 63
Table 110. X and Y axes operative mode selection . . . 63
Table 111. Output data rate configuration . . . 63
Table 112. CTRL_REG2_M register . . . 64
Table 113. CTRL_REG2_M register description . . . 64
Table 114. Full-scale selection . . . 64
Table 115. CTRL_REG3_M register . . . 64
Table 116. CTRL_REG3_M register description . . . 64
Table 117. System operating mode selection . . . 65
Table 118. CTRL_REG4_M register . . . 65
Table 119. CTRL_REG4_M register description . . . 65
Table 120. Z-axis operative mode selection . . . 65
Table 121. CTRL_REG5_M register . . . 65
Table 122. CTRL_REG5_M register description . . . 65
Table 123. STATUS_REG_M register . . . 66
Table 124. STATUS_REG_M register description . . . 66
Table 125. INT_CFG_M register . . . 67
Table 126. INT_CFG_M register description . . . 67
Table 127. INT_SRC_M register . . . 67
Table 128. INT_SRC_M register description . . . 67
Table 129. INT_THS_L_M register . . . 68
Table 130. INT_THS_H_M register . . . 68
Table 131. LGA (3.5x3x1 mm) 24-lead package mechanical data . . . 70
Table 132. Document revision history . . . 71

List of figures

Figure 1. Pin connections . . . 10
Figure 2. Recommended power-up sequence . . . 14
Figure 3. SPI slave timing diagram . . . 15
Figure 4. I^2C slave timing diagram . . . 16
Figure 5. Switching operating modes . . . 19
Figure 6. Multiple reads: accelerometer only . . . 21
Figure 7. Multiple reads: accelerometer and gyroscope . . . 21
Figure 8. Accelerometer and gyroscope digital block diagram . . . 22
Figure 9. Magnetometer block diagram . . . 22
Figure 10. Bypass mode . . . 23
Figure 11. FIFO mode . . . 24
Figure 12. Continuous mode . . . 25
Figure 13. Continuous-to-FIFO mode . . . 25
Figure 14. Bypass-to-Continuous mode . . . 26
Figure 15. LSM9DS1 electrical connections . . . 27
Figure 16. Accelerometer and gyroscope read and write protocol . . . 31
Figure 17. Accelerometer and gyroscope SPI read protocol . . . 32
Figure 18. Multiple byte SPI read protocol (2-byte example) . . . 32
Figure 19. Accelerometer and gyroscope SPI write protocol . . . 33
Figure 20. Multiple byte SPI write protocol (2-byte example) . . . 33
Figure 21. Accelerometer and gyroscope SPI read protocol in 3-wire mode . . . 33
Figure 22. Magnetic sensor read and write protocol . . . 34
Figure 23. Magnetic sensor SPI read protocol . . . 35
Figure 24. Multiple byte SPI read protocol (2-byte example) . . . 35
Figure 25. Magnetic sensor SPI write protocol . . . 36
Figure 26. Multiple byte SPI write protocol (2-byte example) . . . 36
Figure 27. SPI read protocol in 3-wire mode . . . 37
Figure 28. INT_SEL and OUT_SEL configuration gyroscope block diagram . . . 47
Figure 29. Wait bit disabled . . . 60
Figure 30. Wait bit enabled . . . 61
Figure 31. LGA (3.5x3x1 mm) 24-lead package outline . . . 69

1 Pin description

Figure 1. Pin connections

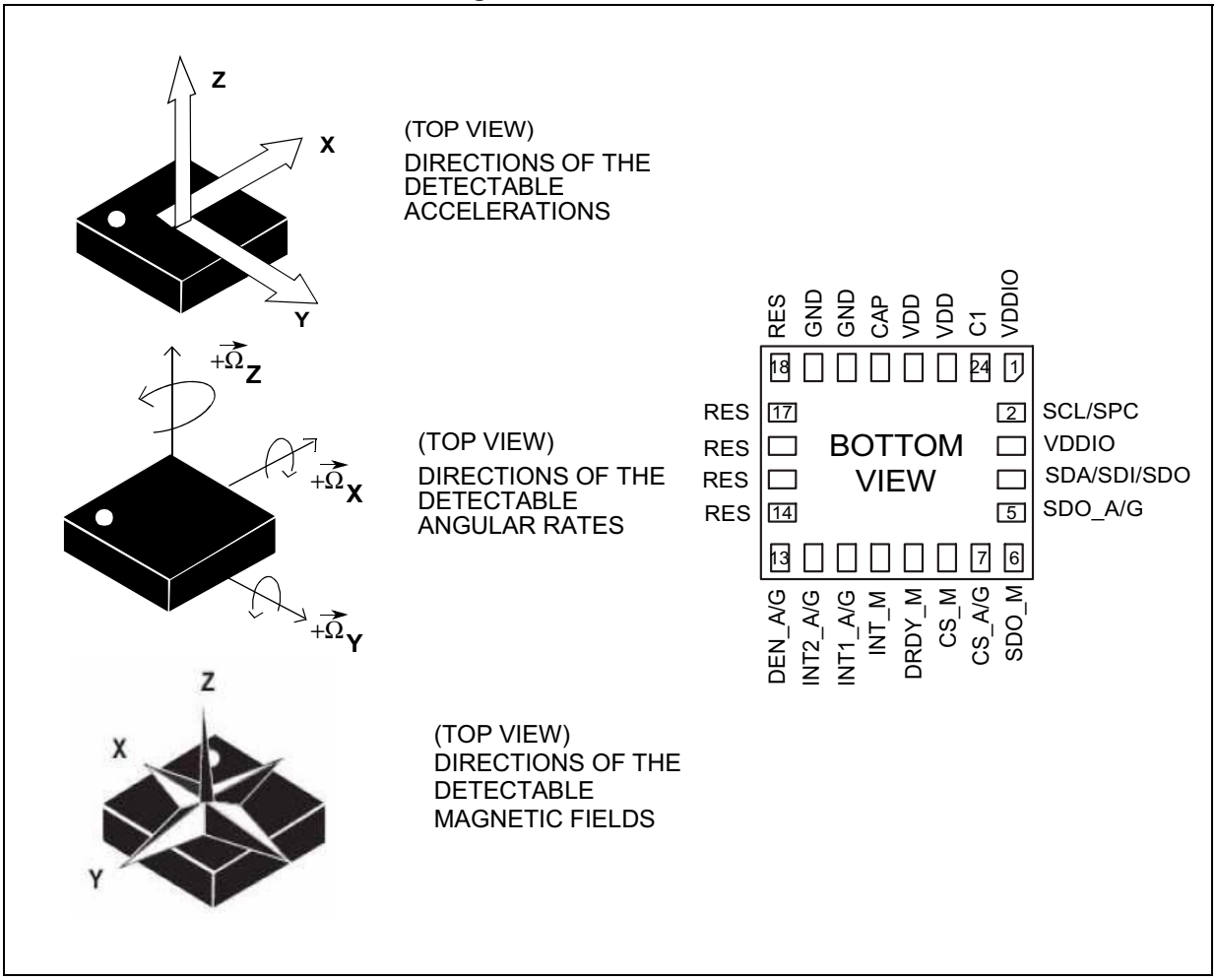

Table 2. Pin description

Pin #	Name	Function
1	VDDIO(1)	Power supply for I/O pins
2	SCL/SPC	I^2C serial clock (SCL) / SPI serial port clock (SPC)
3	VDDIO(2)	Power supply for I/O pins
4	SDA/SDI/SDO	I^2C serial data (SDA) SPI serial data input (SDI) 3-wire interface serial data output (SDO)
5	SDO_A/G	SPI serial data output (SDO) for the accelerometer and gyroscope I^2C least significant bit of the device address (SA0) for the accelerometer and gyroscope
6	SDO_M	SPI serial data output (SDO) for the magnetometer I^2C least significant bit of the device address (SA0) for the magnetometer
7	CS_A/G	SPI enable I^2C/SPI mode selection for the accelerometer and gyroscope (1: SPI idle mode / I^2C communication enabled; 0: SPI communication mode / I^2C disabled)
8	CS_M	SPI enable I^2C/SPI mode selection for the magnetometer (1: SPI idle mode / I^2C communication enabled; 0: SPI communication mode / I^2C disabled)
9	DRDY_M	Magnetic sensor data ready
10	INT_M	Magnetic sensor interrupt
11	INT1_A/G	Accelerometer and gyroscope interrupt 1
12	INT2_A/G	Accelerometer and gyroscope interrupt 2
13	DEN_A/G	Accelerometer and gyroscope data enable
14	RES	Reserved. Connected to GND.
15	RES	Reserved. Connected to GND.
16	RES	Reserved. Connected to GND.
17	RES	Reserved. Connected to GND.
18	RES	Reserved. Connected to GND.
19	GND	0 V supply
20	GND	0 V supply
21	CAP	Connected to GND with ceramic capacitor(3)
22	VDD(4)	Power supply
23	VDD(5)	Power supply
24	C1	Capacitor connection (C1 = 100 nF)

1. Recommended 100 nF filter capacitor.
2. Recommended 100 nF filter capacitor.
3. 10 nF (±10%), 16 V. 1 nF minimum value has to be guaranteed under 11 V bias condition.
4. Recommended 100 nF plus 10 µF capacitors.
5. Recommended 100 nF plus 10 µF capacitors.

2 Module specifications

2.1 Sensor characteristics

@ Vdd = 2.2 V, T = 25 °C unless otherwise noted[a]

Table 3. Sensor characteristics

Symbol	Parameter	Test conditions	Min.	Typ.[1]	Max.	Unit
LA_FS	Linear acceleration measurement range			±2		*g*
				±4		
				±8		
				±16		
M_FS	Magnetic measurement range			±4		gauss
				±8		
				±12		
				±16		
G_FS	Angular rate measurement range			±245		dps
				±500		
				±2000		
LA_So	Linear acceleration sensitivity	Linear acceleration FS = ±2 *g*		0.061		m*g*/LSB
		Linear acceleration FS = ±4 *g*		0.122		
		Linear acceleration FS = ±8 *g*		0.244		
		Linear acceleration FS = ±16 *g*		0.732		
M_GN	Magnetic sensitivity	Magnetic FS = ±4 gauss		0.14		mgauss/ LSB
		Magnetic FS = ±8 gauss		0.29		
		Magnetic FS = ±12 gauss		0.43		
		Magnetic FS = ±16 gauss		0.58		
G_So	Angular rate sensitivity	Angular rate FS = ±245 dps		8.75		mdps/ LSB
		Angular rate FS = ±500 dps		17.50		
		Angular rate FS = ±2000 dps		70		
LA_TyOff	Linear acceleration typical zero-g level offset accuracy[2]	FS = ±8 *g*		±90		m*g*
M_TyOff	Zero-gauss level [3]	FS = ±4 gauss		±1		gauss
G_TyOff	Angular rate typical zero-rate level [4]	FS = ±2000 dps		±30		dps
M_DF	Magnetic disturbance field	Zero-gauss offset starts to degrade			50	gauss
Top	Operating temperature range		-40		+85	°C

1. Typical specifications are not guaranteed
2. Typical zero-*g* level offset value after soldering
3. Typical zero-gauss level value after test and trimming
4. Typical zero rate level offset value after MSL3 preconditioning

a. The product is factory calibrated at 2.2 V. The operational power supply range is from 1.9 V to 3.6 V.

2.2 Electrical characteristics

@ Vdd = 2.2 V, T = 25 °C unless otherwise noted[b]

Table 4. Electrical characteristics

Symbol	Parameter	Test conditions	Min.	Typ.(1)	Max.	Unit
Vdd	Supply voltage		1.9		3.6	V
Vdd_IO	Module power supply for I/O		1.71		Vdd+0.1	
Idd_XM	Current consumption of the accelerometer and magnetic sensor in normal mode (2)			600		µA
Idd_G	Gyroscope current consumption in normal mode(3)			4.0		mA
Top	Operating temperature range		-40		+85	°C
Trise	Time for power supply rising(4)		0.01		100	ms
Twait	Time delay between Vdd_IO and Vdd(4)		0		10	ms

1. Typical specifications are not guaranteed
2. Magnetic sensor in high-resolution mode (ODR = 20 Hz), accelerometer sensor in normal mode, gyroscope in power-down mode
3. Accelerometer and magnetic sensor in power-down mode
4. Please refer to *Section 2.2.1: Recommended power-up sequence* for more details.

b. LSM9DS1 is factory calibrated at 2.2 V.

2.2.1 Recommended power-up sequence

For the power-up sequence please refer to the following figure, where:

- Trise is the time for the power supply to rise from 10% to 90% of its final value
- Twait is the delay between the end of the Vdd_IO ramp (90% of its final value) and the start of the Vdd ramp

Figure 2. Recommended power-up sequence

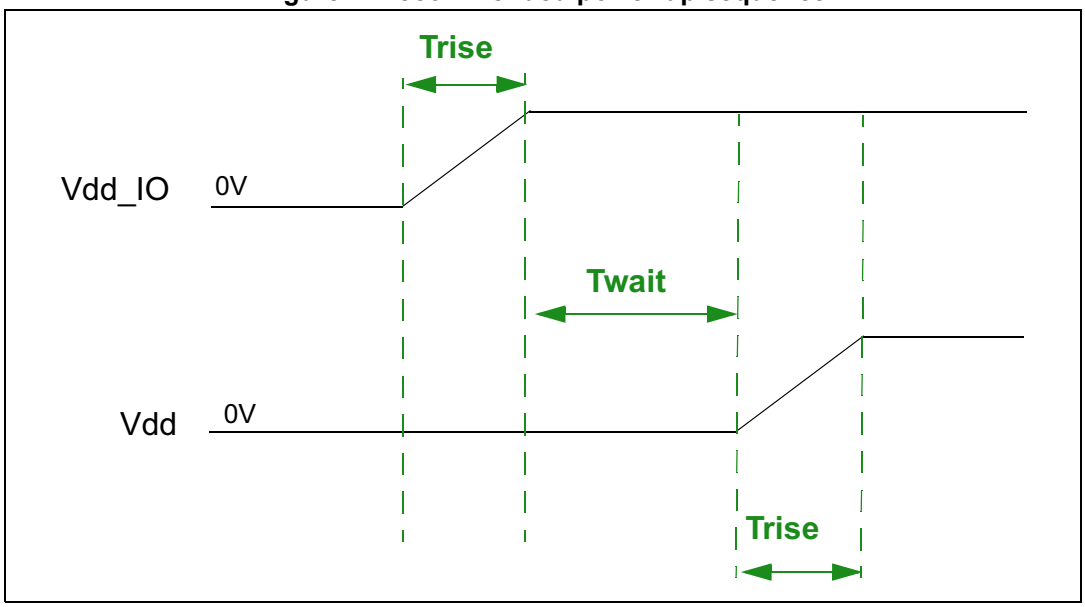

2.3 Temperature sensor characteristics

@ Vdd = 2.2 V, T = 25 °C unless otherwise noted [c]

Table 5. Temperature sensor characteristics

Symbol	Parameter	Test condition	Min.	Typ.(1)	Max.	Unit
TODR	Temperature refresh rate	Gyro OFF(2)		50		Hz
		Gyro ON		59.5		
TSen	Temperature sensitivity(3)			16		LSB/°C
Top	Operating temperature range		-40		+85	°C

1. Typical specifications are not guaranteed.
2. When the accelerometer ODR is set to 10 Hz and the gyroscope part is turned off, the TODR value is 10 Hz.
3. The output of the temperature sensor is 0 (typ.) at 25 °C

c. The product is factory calibrated at 2.2 V.

2.4 Communication interface characteristics

2.4.1 SPI - serial peripheral interface

Subject to general operating conditions for Vdd and Top.

Table 6. SPI slave timing values

Symbol	Parameter	Value(1)		Unit
		Min	Max	
$t_{c(SPC)}$	SPI clock cycle	100		ns
$f_{c(SPC)}$	SPI clock frequency		10	MHz
$t_{su(CS)}$	CS setup time	5		ns
$t_{h(CS)}$	CS hold time	20		
$t_{su(SI)}$	SDI input setup time	5		
$t_{h(SI)}$	SDI input hold time	15		
$t_{v(SO)}$	SDO valid output time		50	
$t_{h(SO)}$	SDO output hold time	5		
$t_{dis(SO)}$	SDO output disable time		50	

1. Values are guaranteed at 10 MHz clock frequency for SPI with both 4 and 3 wires, based on characterization results, not tested in production

Figure 3. SPI slave timing diagram

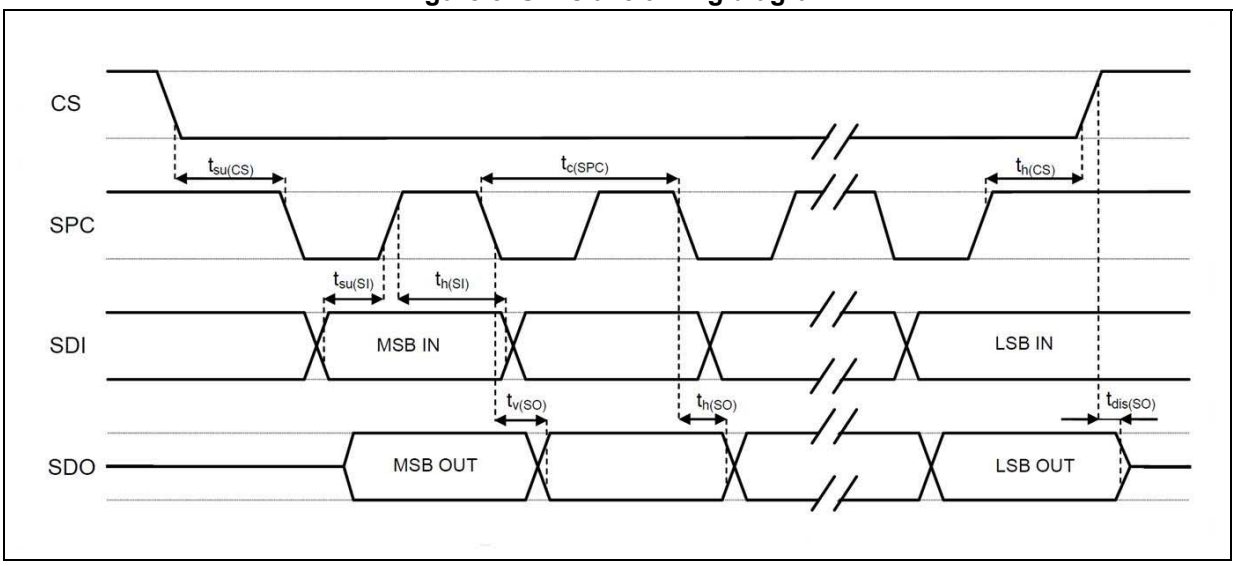

Note: Measurement points are done at 0.2·Vdd_IO and 0.8·Vdd_IO, for both input and output ports.

2.4.2 I²C - inter-IC control interface

Subject to general operating conditions for Vdd and Top.

Table 7. I²C slave timing values

Symbol	Parameter	I²C Standard mode(1)		I²C Fast mode (1)		Unit
		Min	Max	Min	Max	
$f_{(SCL)}$	SCL clock frequency	0	100	0	400	kHz
$t_{w(SCLL)}$	SCL clock low time	4.7		1.3		µs
$t_{w(SCLH)}$	SCL clock high time	4.0		0.6		
$t_{su(SDA)}$	SDA setup time	250		100		ns
$t_{h(SDA)}$	SDA data hold time	0	3.45	0	0.9	µs
$t_{h(ST)}$	START condition hold time	4		0.6		µs
$t_{su(SR)}$	Repeated START condition setup time	4.7		0.6		
$t_{su(SP)}$	STOP condition setup time	4		0.6		
$t_{w(SP:SR)}$	Bus free time between STOP and START condition	4.7		1.3		

1. Data based on standard I²C protocol requirement, not tested in production.

Figure 4. I²C slave timing diagram

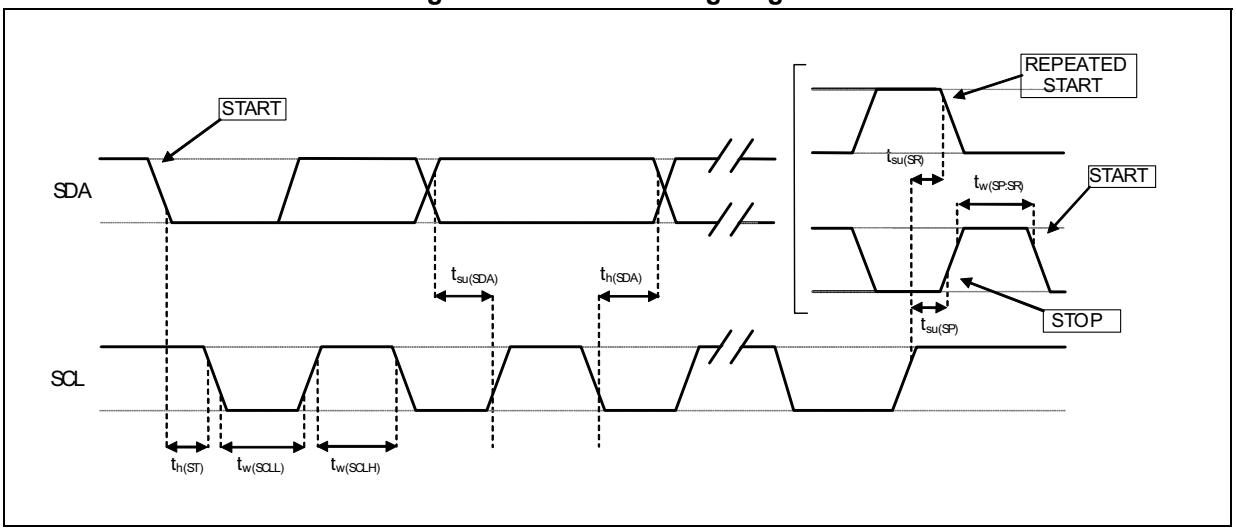

Note: Measurement points are done at 0.2·Vdd_IO and 0.8·Vdd_IO, for both ports

2.5 Absolute maximum ratings

Stresses above those listed as “Absolute maximum ratings” may cause permanent damage to the device. This is a stress rating only and functional operation of the device under these conditions is not implied. Exposure to maximum rating conditions for extended periods may affect device reliability.

Table 8. Absolute maximum ratings

Symbol	Ratings	Maximum value	Unit
Vdd	Supply voltage	-0.3 to 4.8	V
Vdd_IO	I/O pins supply voltage	-0.3 to 4.8	V
Vin	Input voltage on any control pin (including CS_A/G, CS_M, SCL/SPC, SDA/SDI/SDO, SDO_A/G, SDO_M)	0.3 to Vdd_IO +0.3	V
A_{UNP}	Acceleration (any axis)	3,000 for 0.5 ms	g
		10,000 for 0.1 ms	g
M_{EF}	Maximum exposed field	1000	gauss
ESD	Electrostatic discharge protection (HBM)	2	kV
T_{STG}	Storage temperature range	-40 to +125	°C

Note: Supply voltage on any pin should never exceed 4.8 V.

This device is sensitive to mechanical shock, improper handling can cause permanent damage to the part.

This device is sensitive to electrostatic discharge (ESD), improper handling can cause permanent damage to the part.

2.6 Terminology

2.6.1 Sensitivity

Linear acceleration sensitivity can be determined, for example, by applying 1 *g* acceleration to the device. Because the sensor can measure DC accelerations, this can be done easily by pointing the selected axis towards the ground, noting the output value, rotating the sensor 180 degrees (pointing towards the sky) and noting the output value again. By doing so, ±1 *g* acceleration is applied to the sensor. Subtracting the larger output value from the smaller one, and dividing the result by 2, leads to the actual sensitivity of the sensor. This value changes very little over temperature and over time. The sensitivity tolerance describes the range of sensitivities of a large number of sensors.

An angular rate gyroscope is device that produces a positive-going digital output for counterclockwise rotation around the axis considered. Sensitivity describes the gain of the sensor and can be determined by applying a defined angular velocity to it. This value changes very little over temperature and time.

Magnetic sensor sensitivity describes the gain of the sensor and can be determined, for example, by applying a magnetic field of 1 *gauss* to it.

2.6.2 Zero-*g*, zero-rate and zero-*gauss* level

Linear acceleration zero-*g* level offset (TyOff) describes the deviation of an actual output signal from the ideal output signal if no acceleration is present. A sensor in a steady state on a horizontal surface will measure 0 *g* on both the X-axis and Y-axis, whereas the Z-axis will measure 1 *g*. Ideally, the output is in the middle of the dynamic range of the sensor (content of OUT registers 00h, data expressed as two's complement number). A deviation from the ideal value in this case is called zero-*g* offset.

Offset is to some extent a result of stress to MEMS sensor and therefore the offset can slightly change after mounting the sensor onto a printed circuit board or exposing it to extensive mechanical stress. Offset changes little over temperature, see "Linear acceleration zero-*g* level change vs. temperature" in *Table 3*. The zero-*g* level tolerance (TyOff) describes the standard deviation of the range of zero-*g* levels of a group of sensors.

Zero-rate level describes the actual output signal if there is no angular rate present. The zero-rate level of precise MEMS sensors is, to some extent, a result of stress to the sensor and therefore the zero-rate level can slightly change after mounting the sensor onto a printed circuit board or after exposing it to extensive mechanical stress. This value changes very little over temperature and time.

Zero-*g*auss level offset (M_TyOff) describes the deviation of an actual output signal from the ideal output if no magnetic field is present.

3 LSM9DS1 functionality

3.1 Operating modes

In the LSM9DS1 the accelerometer and gyroscope have two operating modes available: only accelerometer active and gyroscope in power down or both accelerometer and gyroscope sensors active at the same ODR. Switching from one mode to the other requires one write operation: writing to *CTRL_REG6_XL (20h)*, the accelerometer operates in normal mode and the gyroscope is powered down, writing to *CTRL_REG1_G (10h)* both accelerometer and gyroscope are activated at the same ODR.

Figure 5 depicts both modes of operation from power down.

Figure 5. Switching operating modes

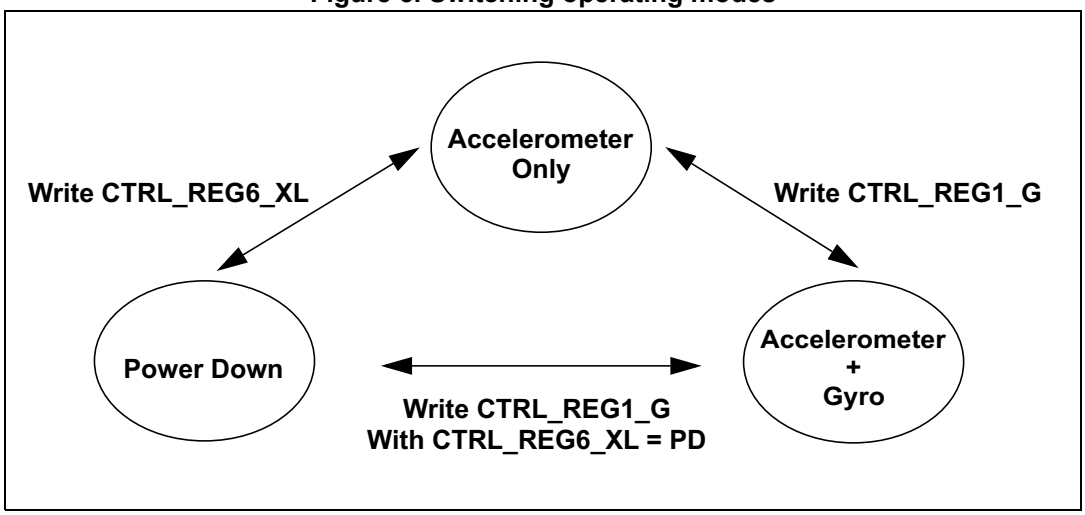

The magnetic sensor has three operating modes available: power-down (default), continuous-conversion mode and single-conversion mode. Switching from power-down to the other modes requires one write operation to *CTRL_REG3_M (22h)*, setting values in the MD[1:0] bits. For the output of the magnetic data compensated by temperature, the TEMP_COMP bit in *CTRL_REG1_M (20h)* must be set to '1'.

3.2 Gyroscope power modes

In the LSM9DS1, the gyroscope can be configured in three different operating modes: power-down, low-power and normal mode.

Low-power mode is available for lower ODR (14.9, 59.5, 119 Hz) while for greater ODR (238, 476, 952 Hz) the device is automatically in normal mode. *Table* summarizes the ODR configuration (ODR_G[2:0] bits set in *CTRL_REG1_G (10h)*) and corresponding power modes.

To enable low-power mode, the LP_mode bit in *CTRL_REG3_G (12h)* has to be set to '1'.

Low-power mode allows reaching low power consumption while maintaining the device always on, refer to *Table 10*.

Table 9. Gyroscope operating modes

ODR_G [2:0]	ODR [Hz]	Power mode
000	Power down	Power-down
001	14.9	Low-power/Normal mode
010	59.5	Low-power/Normal mode
011	119	Low-power/Normal mode
100	238	Normal mode
101	476	Normal mode
110	952	Normal mode

Table 10. Operating mode current consumption

ODR [Hz]	Power mode	Current consumption(1) [mA]
14.9	Low-power	1.9
59.5	Low-power	2.4
119	Low-power	3.1
238	Normal mode	4.3
476	Normal mode	4.3
952	Normal mode	4.3

1. Typical values of gyroscope and accelerometer current consumption are based on characterization data.

Table 11. Accelerometer turn-on time

ODR [Hz]	BW = 400 Hz(1)	BW = 200 Hz(1)	BW = 100 Hz(1)	BW = 50 Hz(1)
14.9	0	0	0	0
59.5	0	0	0	0
119	1	1	1	2
238	1	1	2	4
476	1	2	4	7
952	2	4	7	14

1. The table contains the number of samples to be discarded after switching between power-down mode and normal mode.

Table 12. Gyroscope turn-on time

ODR [Hz]	LPF1 only(1)	LPF1 and LPF2(1)
14.9	2	LPF2 not available
59.5 or 119	3	13
238	4	14
476	5	15
952	8	18

1. The table contains the number of samples to be discarded after switching between low-power mode and normal mode.

3.3 Accelerometer and gyroscope multiple reads (burst)

When only accelerometer is activated and the gyroscope is in power down, starting from *OUT_X_XL (28h - 29h)* multiple reads can be performed. Once *OUT_Z_XL (2Ch - 2Dh)* is read, the system automatically restarts from *OUT_X_XL (28h - 29h)* (see *Figure 6*).

Figure 6. Multiple reads: accelerometer only

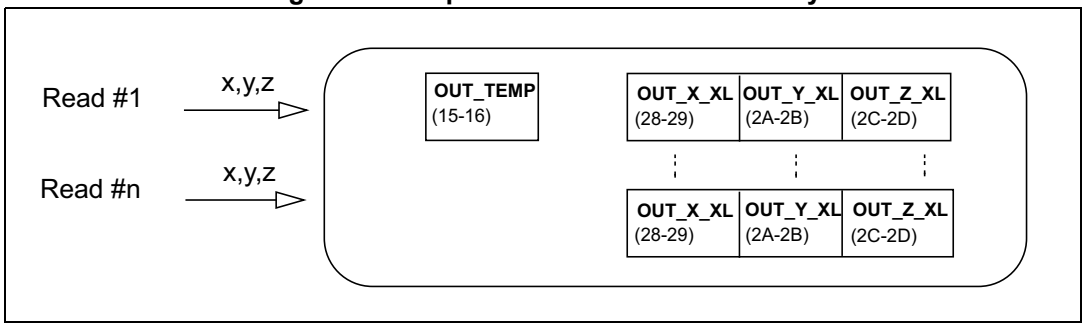

When both accelerometer and gyroscope sensors are activated at the same ODR, starting from *OUT_X_G (18h - 19h)* multiple reads can be performed. Once *OUT_Z_XL (2Ch - 2Dh)* is read, the system automatically restarts from *OUT_X_G (18h - 19h)* (see *Figure 7*).

Figure 7. Multiple reads: accelerometer and gyroscope

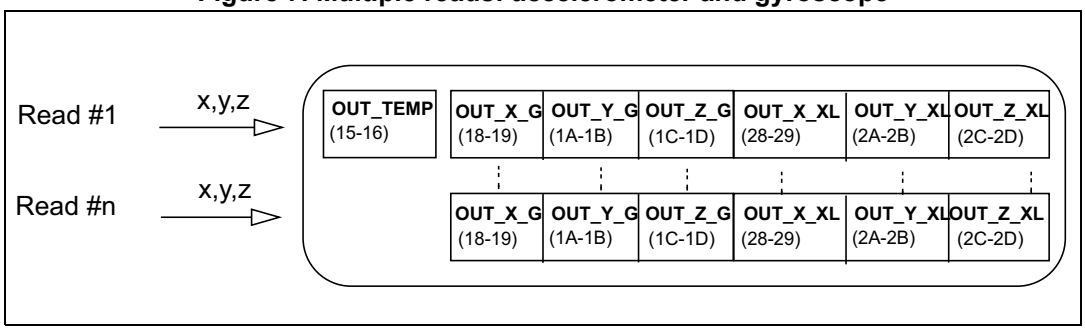

3.4 Block diagram

Figure 8. Accelerometer and gyroscope digital block diagram

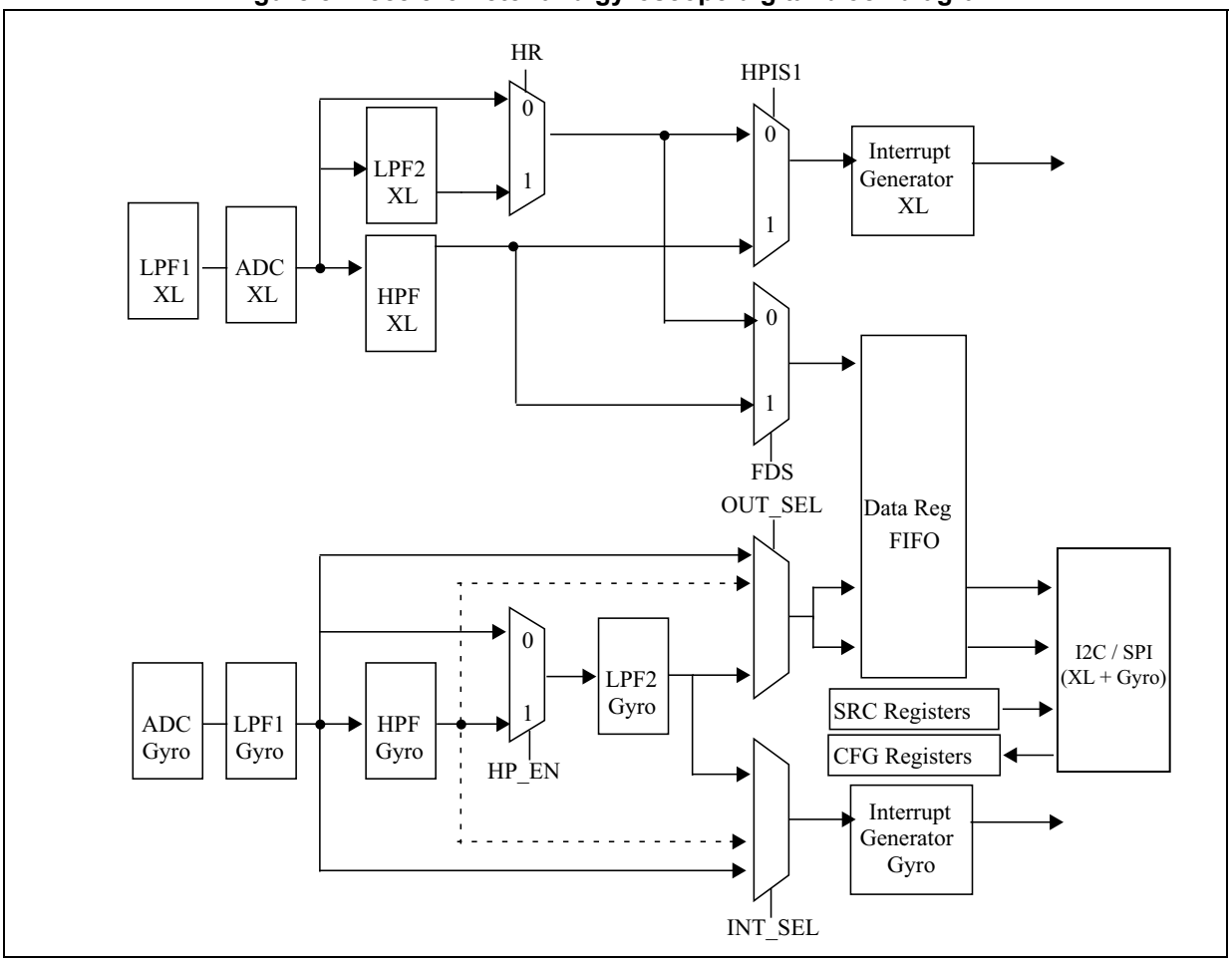

Figure 9. Magnetometer block diagram

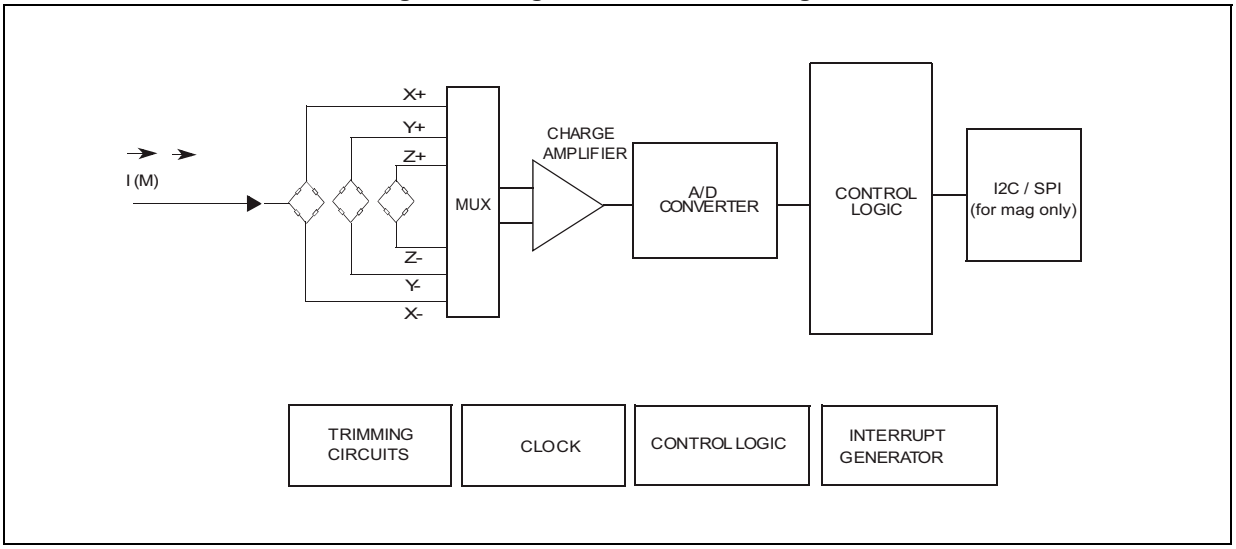

3.5 Accelerometer and gyroscope FIFO

The LSM9DS1 embeds 32 slots of 16-bit data FIFO for each of the gyroscope's three output channels, yaw, pitch and roll, and 16-bit data FIFO for each of the accelerometer's three output channels, X, Y and Z. This allows consistent power saving for the system since the host processor does not need to continuously poll data from the sensor, but it can wake up only when needed and burst the significant data out from the FIFO. This buffer can work accordingly to five different modes: Bypass mode, FIFO-mode, Continuous mode, Continuous-to-FIFO mode and Bypass-to-Continuous. Each mode is selected by the FMODE [2:0] bits in the *FIFO_CTRL (2Eh)* register. Programmable FIFO threshold status, FIFO overrun events and the number of unread samples stored are available in the *FIFO_SRC (2Fh)* register and can be set to generate dedicated interrupts on the INT1_A/G pin in the *INT1_CTRL (0Ch)* register and on the INT2_A/G pin in the *INT2_CTRL (0Dh)* register.

FIFO_SRC (2Fh)(FTH) goes to '1' when the number of unread samples (*FIFO_SRC (2Fh)* (FSS5:0)) is greater than or equal to FTH [4:0] in *FIFO_CTRL (2Eh)*. If *FIFO_CTRL (2Eh)* (FTH[4:0]) is equal to 0, *FIFO_SRC (2Fh)*(FTH) goes to '0'.

FIFO_SRC (2Fh)(OVRN) is equal to '1' if a FIFO slot is overwritten.

FIFO_SRC (2Fh)(FSS [5:0]) contains stored data levels of unread samples. When FSS [5:0] is equal to '000000' FIFO is empty, when FSS [5:0] is equal to '100000' FIFO is full and the unread samples are 32.

The FIFO feature is enabled by writing '1' in *CTRL_REG9 (23h)* (FIFO_EN).

To guarantee the correct acquisition of data during the switching into and out of FIFO mode, the first sample acquired must be discarded.

3.5.1 Bypass mode

In Bypass mode (*FIFO_CTRL (2Eh)*(FMODE [2:0]= 000), the FIFO is not operational and it remains empty.

Bypass mode is also used to reset the FIFO when in FIFO mode.

As described in *Figure 10*, for each channel only the first address is used. When new data is available the old data is overwritten.

Figure 10. Bypass mode

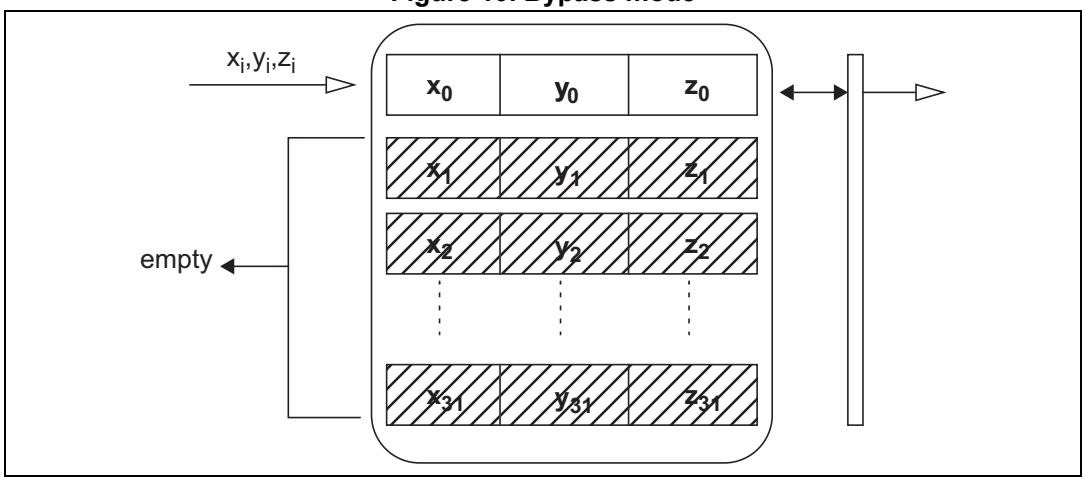

3.5.2 FIFO mode

In FIFO mode (*FIFO_CTRL (2Eh)* (FMODE [2:0] = 001) data from the output channels are stored in the FIFO until it is overwritten.

To reset FIFO content, Bypass mode should be selected by writing *FIFO_CTRL (2Eh)* (FMODE [2:0]) to '000'. After this reset command, it is possible to restart FIFO mode by writing *FIFO_CTRL (2Eh)* (FMODE [2:0]) to '001'.

The FIFO buffer memorizes 32 levels of data but the depth of the FIFO can be resized by setting the STOP_ON_FTH bit in *CTRL_REG9 (23h)*. If the STOP_ON_FTH bit is set to '1', FIFO depth is limited to *FIFO_CTRL (2Eh)*(FTH [4:0]) + 1 data.

A FIFO threshold interrupt can be enabled (INT_OVR bit in *INT1_CTRL (0Ch)*) in order to be raised when the FIFO is filled to the level specified by the FTH[4:0] bits of *FIFO_CTRL (2Eh)*. When a FIFO threshold interrupt occurs, the first data has been overwritten and the FIFO stops collecting data from the input channels.

Figure 11. FIFO mode

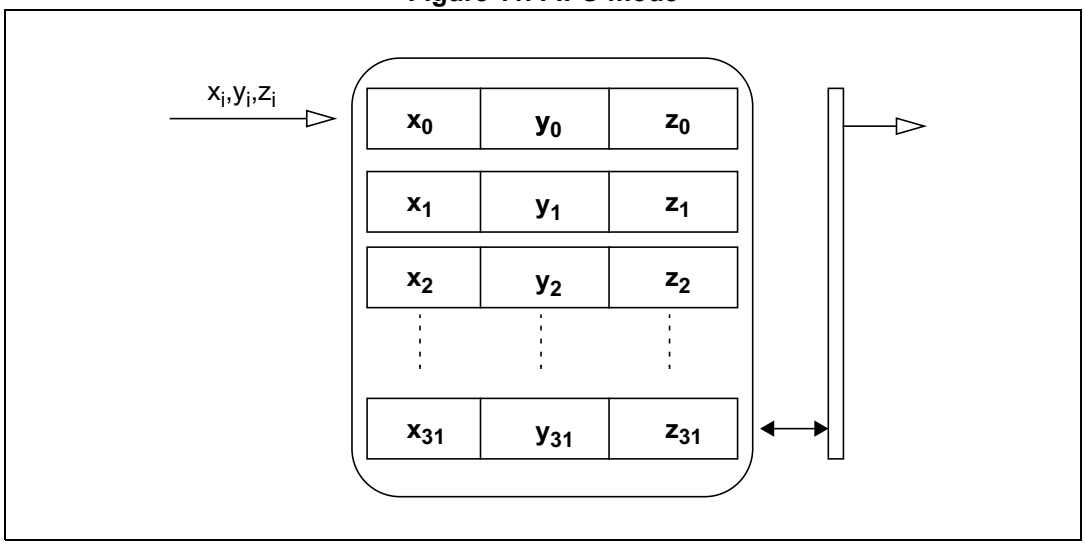

3.5.3 Continuous mode

Continuous mode (*FIFO_CTRL (2Eh)*(FMODE[2:0] = 110) provides continuous FIFO update: as new data arrives the older is discarded.

A FIFO threshold flag *FIFO_SRC (2Fh)*(FTH) is asserted when the number of unread samples in FIFO is greater than or equal to *FIFO_CTRL (2Eh)*(FTH4:0).

It is possible to route *FIFO_SRC (2Fh)*(FTH) to the INT1_A/G pin by writing in register *INT1_CTRL (0Ch)* (INT1_FTH) = '1', or to the INT2_A/G pin by writing in register *INT2_CTRL (0Dh)* (INT2_FTH) = '1'.

A full-flag interrupt can be enabled, (*INT1_CTRL (0Ch)* (INT_ FSS5)= '1') when the FIFO becomes saturated and in order to read the contents all at once.

If an overrun occurs, the oldest sample in FIFO is overwritten and the OVRN flag in *FIFO_SRC (2Fh)* is asserted.

In order to empty the FIFO before it is full it is also possible to pull from FIFO the number of unread samples available in *FIFO_SRC (2Fh)* (FSS[5:0]).

Figure 12. Continuous mode

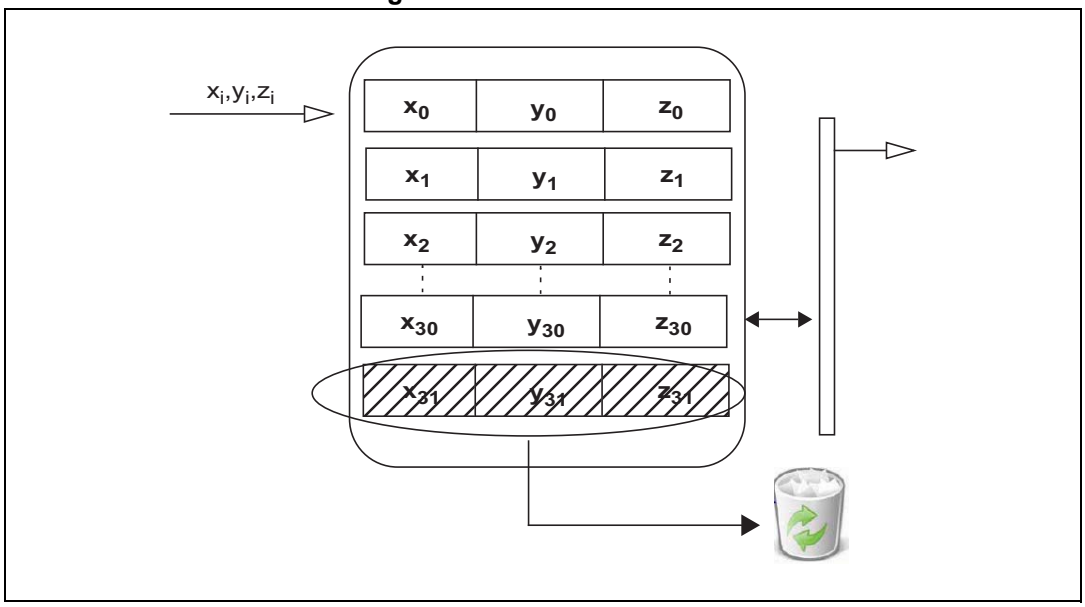

3.5.4 Continuous-to-FIFO mode

In Continuous-to-FIFO mode (*FIFO_CTRL (2Eh)*(FMODE [2:0] = 011), FIFO behavior changes according to the *INT_GEN_SRC_XL (26h)*(IA_XL) bit. When the *INT_GEN_SRC_XL (26h)*(IA_XL) bit is equal to '1', FIFO operates in FIFO-mode, when the *INT_GEN_SRC_XL (26h)*(IA_XL) bit is equal to '0', FIFO operates in Continuous mode.

The interrupt generator should be set to the desired configuration by means of *INT_GEN_CFG_XL (06h)*, *INT_GEN_THS_X_XL (07h)*, *INT_GEN_THS_Y_XL (08h)* and *INT_GEN_THS_Z_XL (09h)*.

The *CTRL_REG4 (1Eh)*(LIR_XL) bit should be set to '1' in order to have latched interrupt.

Figure 13. Continuous-to-FIFO mode

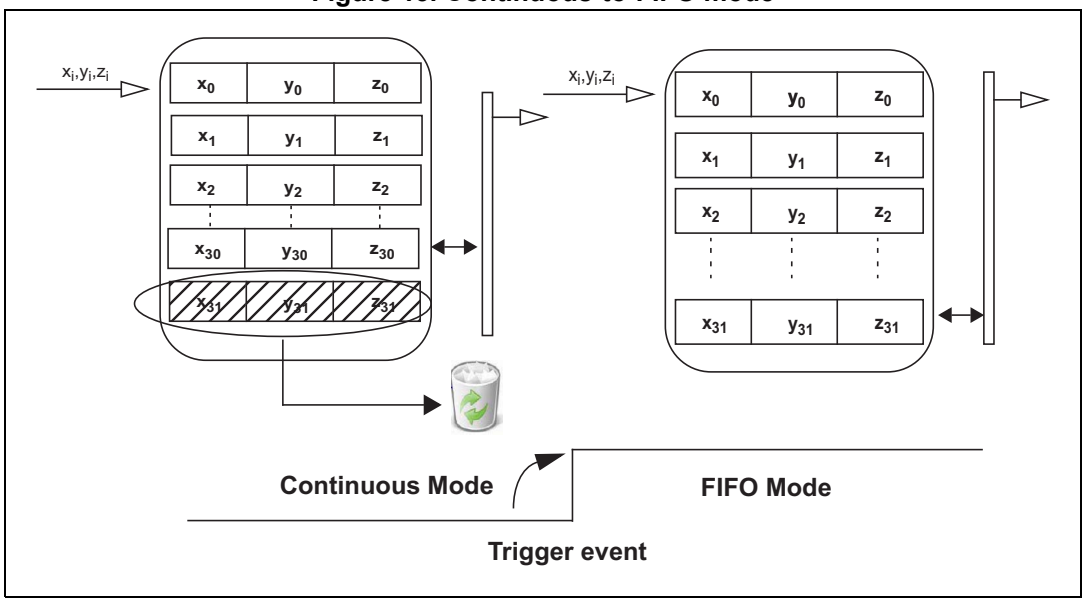

3.5.5 Bypass-to-Continuous mode

In Bypass-to-Continuous mode (*FIFO_CTRL (2Eh)*(FMODE[2:0] = '100'), data measurement storage inside FIFO operates in Continuous mode when *INT_GEN_SRC_XL (26h)*(IA_XL) is equal to '1', otherwise FIFO content is reset (Bypass mode).

The interrupt generator should be set to the desired configuration by means of *INT_GEN_CFG_XL (06h)*, *INT_GEN_THS_X_XL (07h)*, *INT_GEN_THS_Y_XL (08h)* and *INT_GEN_THS_Z_XL (09h)*.

The *CTRL_REG4 (1Eh)*(LIR_XL) bit should be set to '1' in order to have latched interrupt.

Figure 14. Bypass-to-Continuous mode

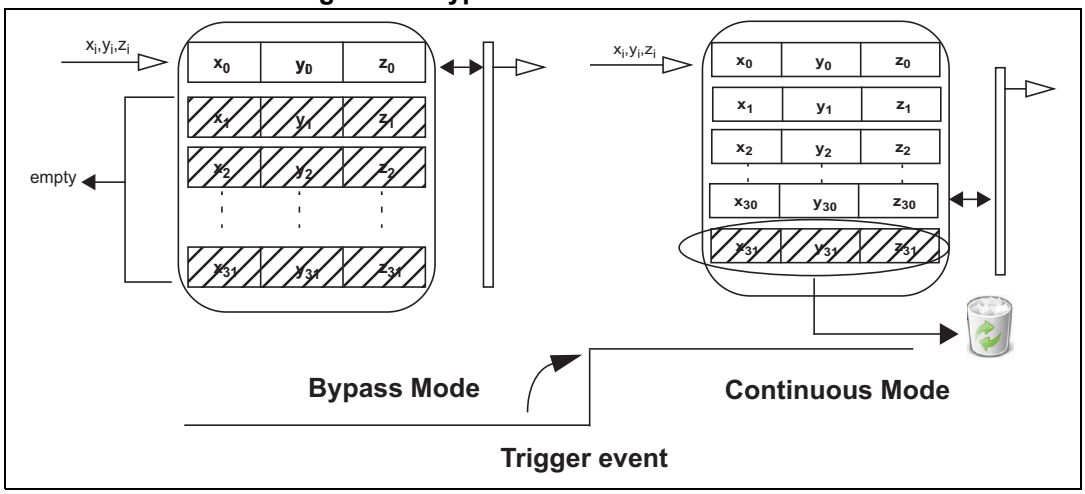

4 Application hints

Figure 15. LSM9DS1 electrical connections

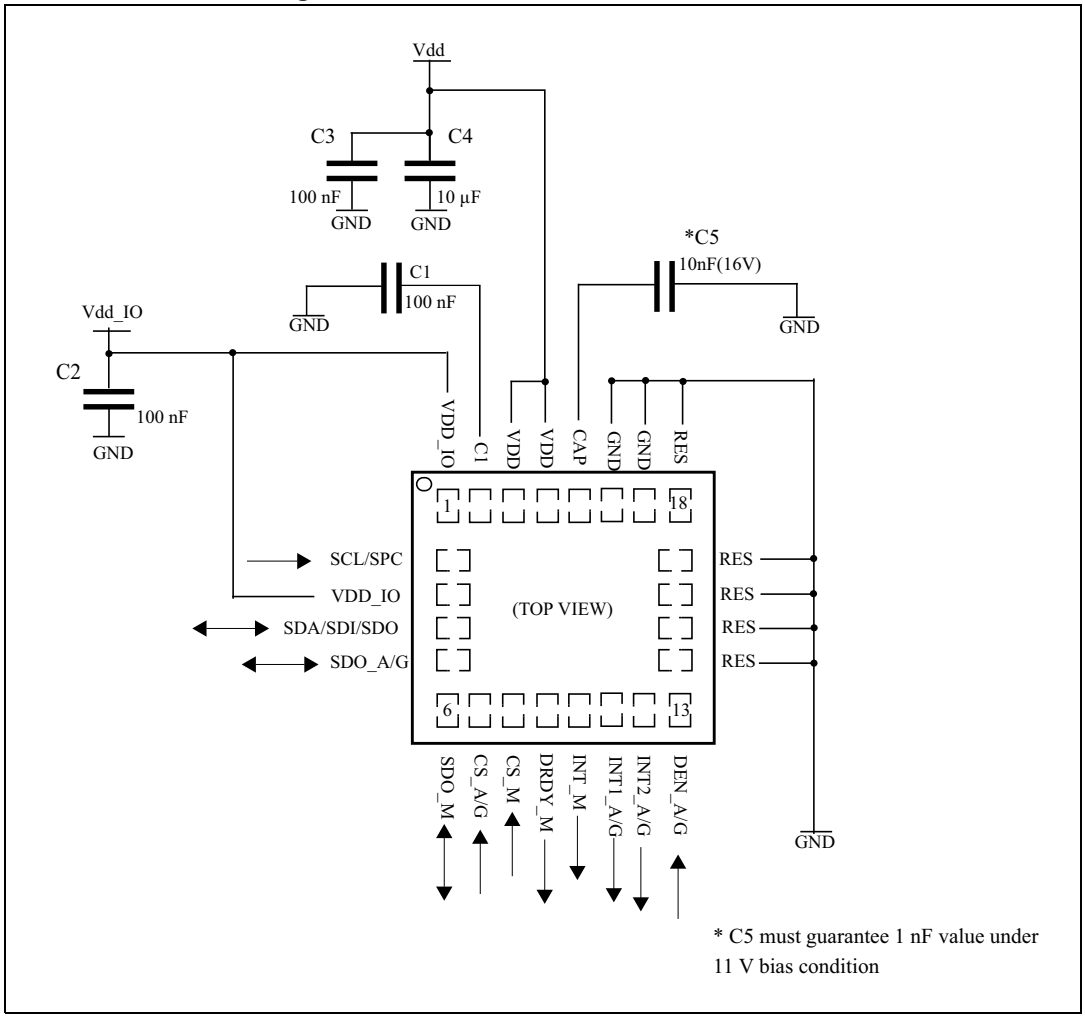

4.1 External capacitors

The device core is supplied through the Vdd line. Power supply decoupling capacitors (C2, C3 = 100 *nF* ceramic, C4 = 10 *µF* Al) should be placed as near as possible to the supply pin of the device (common design practice). Capacitor C1 (100 nF) should be a capacitor with low ESR value and should be placed as near as possible to the C1 pin.

All voltage and ground supplies must be present at the same time to achieve proper behavior of the IC (refer to *Figure 15*).

5 Digital interfaces

The registers embedded inside the LSM9DS1 may be accessed through both the I^2C and SPI serial interfaces. The latter may be SW configured to operate either in 3-wire or 4-wire interface mode.

The serial interfaces are mapped onto the same pins. To select/exploit the I^2C interface, the CS line must be tied high (i.e connected to Vdd_IO).

Table 13. Serial interface pin description

Pin name	Pin description
CS_A/G, CS_M	SPI enable I^2C/SPI mode selection (1: SPI idle mode / I^2C communication enabled; 0: SPI communication mode / I^2C disabled)
SCL/SPC	I^2C Serial Clock (SCL) SPI Serial Port Clock (SPC)
SDA/SDI/SDO	I^2C Serial Data (SDA) SPI Serial Data Input (SDI) 3-wire Interface Serial Data Output (SDO)
SDO_A/G, SDO_M	SPI Serial Data Output (SDO) I^2C less significant bit of the device address

5.1 I^2C serial interface

The LSM9DS1 I^2C is a bus slave. The I^2C is employed to write the data to the registers, whose content can also be read back.

The relevant I^2C terminology is provided in the table below.

Table 14. I^2C terminology

Term	Description
Transmitter	The device which sends data to the bus
Receiver	The device which receives data from the bus
Master	The device which initiates a transfer, generates clock signals and terminates a transfer
Slave	The device addressed by the master

There are two signals associated with the I^2C bus: the serial clock line (SCL) and the Serial DAta line (SDA). The latter is a bidirectional line used for sending and receiving the data to/from the interface. Both the lines must be connected to Vdd_IO through an external pull-up resistor. When the bus is free, both the lines are high.

The I^2C interface is implemented with fast mode (400 kHz) I^2C standards as well as with the standard mode.

In order to disable the I^2C block for accelerometer and gyroscope the I2C_DISABLE bit must be written to ‘1’ in *CTRL_REG9 (23h)*, while for magnetometer the I2C_DISABLE bit must be written to ‘1’ in *CTRL_REG3_M (22h)*.

5.1.1 I²C operation

The transaction on the bus is started through a START (ST) signal. A START condition is defined as a high-to-low transition on the data line while the SCL line is held high. After this has been transmitted by the master, the bus is considered busy. The next byte of data transmitted after the start condition contains the address of the slave in the first 7 bits and the eighth bit tells whether the master is receiving data from the slave or transmitting data to the slave. When an address is sent, each device in the system compares the first seven bits after a start condition with its address. If they match, the device considers itself addressed by the master.

Data transfer with acknowledge is mandatory. The transmitter must release the SDA line during the acknowledge pulse. The receiver must then pull the data line low so that it remains stable low during the high period of the acknowledge clock pulse. A receiver which has been addressed is obliged to generate an acknowledge after each byte of data received.

The I²C embedded inside the LSM9DS1 behaves like a slave device and the following protocol must be adhered to. In the I²C of the accelerometer and gyroscope sensor, after the start condition (ST) a slave address is sent, once a slave acknowledge (SAK) has been returned, an 8-bit sub-address (SUB) is transmitted. The 7 LSb represent the actual register address while the *CTRL_REG8 (22h)* (IF_ADD_INC) bit defines the address increment. In the I²C of the magnetometer sensor, after the START condition (ST) a slave address is sent, once a slave acknowledge (SAK) has been returned, an 8-bit sub-address (SUB) is transmitted. The 7 LSb represent the actual register address while the MSB enables the address auto increment. The SUB (register address) is automatically increased to allow multiple data read/write.

Table 15. Transfer when master is writing one byte to slave

Master	ST	SAD + W		SUB		DATA		SP
Slave			SAK		SAK		SAK	

Table 16. Transfer when master is writing multiple bytes to slave

Master	ST	SAD + W		SUB		DATA		DATA		SP
Slave			SAK		SAK		SAK		SAK	

Table 17. Transfer when master is receiving (reading) one byte of data from slave

Master	ST	SAD + W		SUB		SR	SAD + R			NMAK	SP
Slave			SAK		SAK			SAK	DATA		

Table 18. Transfer when master is receiving (reading) multiple bytes of data from slave

Master	ST	SAD+W		SUB		SR	SAD+R			MAK		MAK		NMAK	SP
Slave			SAK		SAK			SAK	DATA		DATA		DATA		

Data are transmitted in byte format (DATA). Each data transfer contains 8 bits. The number of bytes transferred per transfer is unlimited. Data is transferred with the Most Significant bit (MSb) first. If a receiver can't receive another complete byte of data until it has performed

some other function, it can hold the clock line, SCL low to force the transmitter into a wait state. Data transfer only continues when the receiver is ready for another byte and releases the data line. If a slave receiver doesn't acknowledge the slave address (i.e. it is not able to receive because it is performing some real-time function) the data line must be left high by the slave. The master can then abort the transfer. A low-to-high transition on the SDA line while the SCL line is high is defined as a STOP condition. Each data transfer must be terminated by the generation of a STOP (SP) condition.

In the presented communication format MAK is Master acknowledge and NMAK is No Master Acknowledge.

Default address:

The slave address is completed with a Read/Write bit. If the bit was '1' (Read), a repeated START (SR) condition must be issued after the two sub-address bytes. If the bit is '0' (Write) the master will transmit to the slave with direction unchanged. *Table 19* and *Table 20* explain how the SAD+Read/Write bit pattern is composed, listing all the possible configurations.

Table 19. Accelerometer and gyroscope SAD+Read/Write patterns

Command	SAD[6:1]	SAD[0] = SA0	R/W	SAD+R/W
Read	110101	0	1	11010101 (D5h)
Write	110101	0	0	11010100 (D4h)
Read	110101	1	1	11010111 (D7h)
Write	110101	1	0	11010110 (D6h)

Table 20. Magnetic sensor SAD+Read/Write patterns

Command	SAD[6:2]	SAD[1] = SDO/SA1	SAD[0]	R/W	SAD+R/W
Read	00111	0	0	1	00111001 (39h)
Write	00111	0	0	0	00111000 (38h)
Read	00111	1	0	1	00111101 (3Dh)
Write	00111	1	0	0	00111100 (3Ch)

5.2 Accelerometer and gyroscope SPI bus interface

The LSM9DS1 accelerometer and gyroscope SPI is a bus slave. The SPI allows to write and read the registers of the device.

The Serial Interface connects to applications using 4 wires: **CS_A/G**, **SPC**, **SDI** and **SDO_A/G**.

Figure 16. Accelerometer and gyroscope read and write protocol

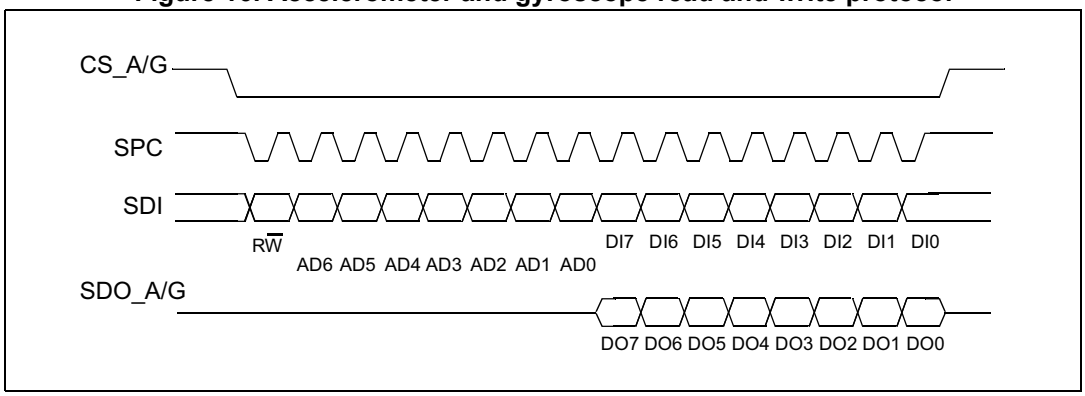

CS_A/G is the serial port enable and it is controlled by the SPI master. It goes low at the start of the transmission and goes back high at the end. **SPC** is the serial port clock and it is controlled by the SPI master. It is stopped high when **CS_A/G** is high (no transmission). **SDI** and **SDO_A/G** are respectively the serial port data input and output. Those lines are driven at the falling edge of **SPC** and should be captured at the rising edge of **SPC**.

Both the read register and write register commands are completed in 16 clock pulses or in multiples of 8 in case of multiple read/write bytes. Bit duration is the time between two falling edges of **SPC**. The first bit (bit 0) starts at the first falling edge of **SPC** after the falling edge of **CS_A/G** while the last bit (bit 15, bit 23, ...) starts at the last falling edge of SPC just before the rising edge of **CS_A/G**.

bit 0: $\overline{RW}$ bit. When 0, the data DI(7:0) is written into the device. When 1, the data DO(7:0) from the device is read. In latter case, the chip will drive **SDO_A/G** at the start of bit 8.

bit 1-7: address AD(6:0). This is the address field of the indexed register.

bit 8-15: data DI(7:0) (write mode). This is the data that is written into the device (MSb first).

bit 8-15: data DO(7:0) (read mode). This is the data that is read from the device (MSb first).

In multiple read/write commands further blocks of 8 clock periods will be added. When the *CTRL_REG8 (22h)* (IF_ADD_INC) bit is '0' the address used to read/write data remains the same for every block. When the *CTRL_REG8 (22h)*(IF_ADD_INC) bit is '1', the address used to read/write data is increased at every block.

The function and the behavior of **SDI** and **SDO_A/G** remain unchanged.

5.2.1 SPI read

Figure 17. Accelerometer and gyroscope SPI read protocol

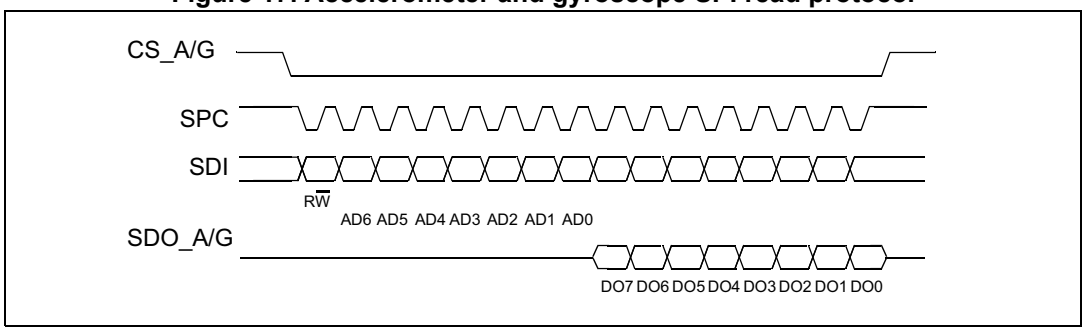

The SPI read command is performed with 16 clock pulses. A multiple byte read command is performed by adding blocks of 8 clock pulses to the previous one.

bit 0: READ bit. The value is 1.

bit 1-7: address AD(6:0). This is the address field of the indexed register.

bit 8-15: data DO(7:0) (read mode). This is the data that will be read from the device (MSb first).

bit 16-... : data DO(...-8). Further data in multiple byte reads.

Figure 18. Multiple byte SPI read protocol (2-byte example)

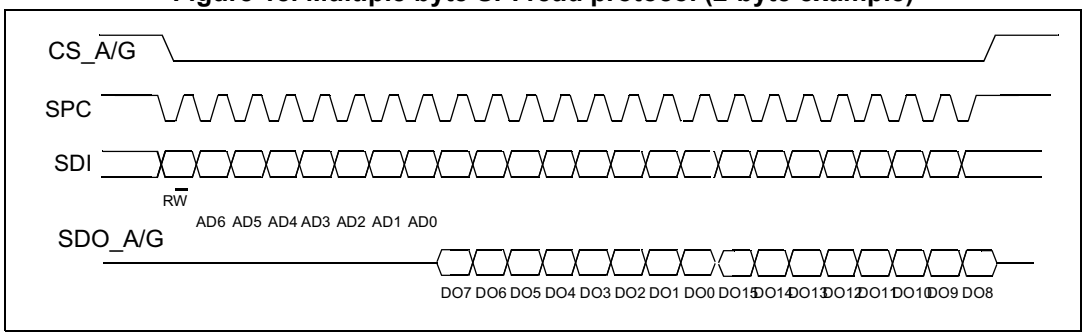

5.2.2 SPI write

Figure 19. Accelerometer and gyroscope SPI write protocol

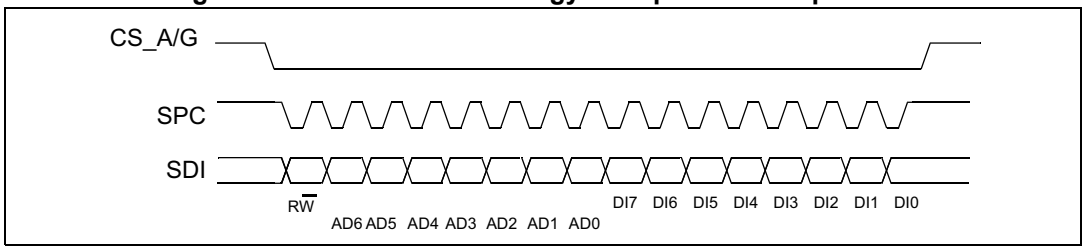

The SPI write command is performed with 16 clock pulses. A multiple byte write command is performed by adding blocks of 8 clock pulses to the previous one.

bit 0: WRITE bit. The value is 0.

bit 1 -7: address AD(6:0). This is the address field of the indexed register.

bit 8-15: data DI(7:0) (write mode). This is the data that is written inside the device (MSb first).

bit 16-... : data DI(...-8). Further data in multiple byte writes.

Figure 20. Multiple byte SPI write protocol (2-byte example)

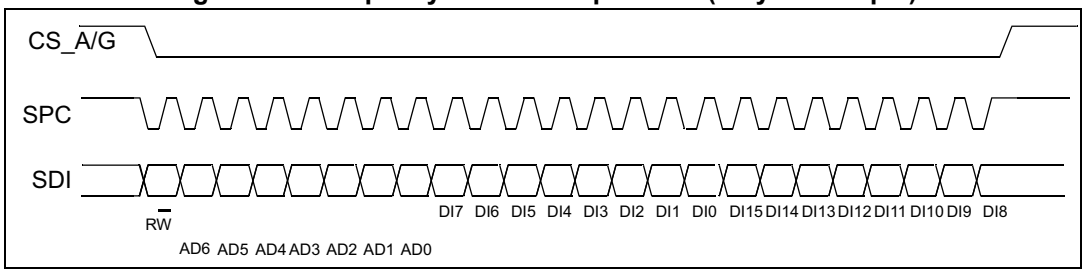

5.2.3 SPI read in 3-wire mode

3-wire mode is entered by setting the *CTRL_REG8 (22h)*(SIM) bit equal to ‘1’ (SPI serial interface mode selection).

Figure 21. Accelerometer and gyroscope SPI read protocol in 3-wire mode

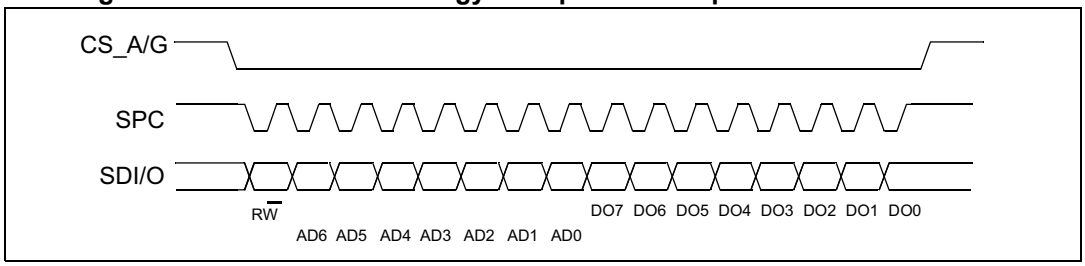

The SPI read command is performed with 16 clock pulses:

bit 0: READ bit. The value is 1.

bit 1-7: address AD(6:0). This is the address field of the indexed register.

bit 8-15: data DO(7:0) (read mode). This is the data that is read from the device (MSb first).

A multiple read command is also available in 3-wire mode.

5.3 Magnetic sensor SPI bus interface

The LSM9DS1 magnetic sensor SPI is a bus slave. The SPI allows writing and reading the registers of the device.

The serial interface connects to applications using 4 wires: **CS_M**, **SPC**, **SDI** and **SDO_M**.

Figure 22. Magnetic sensor read and write protocol

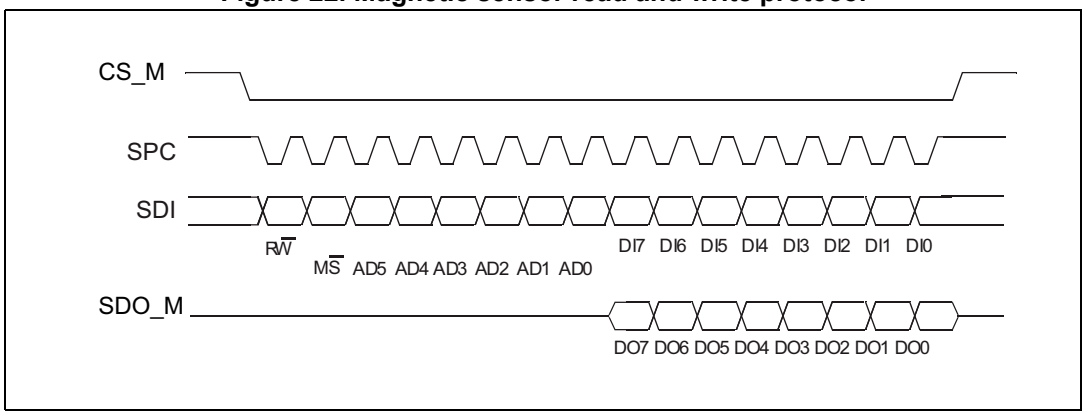

CS_M is the serial port enable and it is controlled by the SPI master. It goes low at the start of the transmission and goes back high at the end. **SPC** is the serial port clock and it is controlled by the SPI master. It is stopped high when **CS_M** is high (no transmission). **SDI** and **SDO_M** are respectively the serial port data input and output. Those lines are driven at the falling edge of **SPC** and should be captured at the rising edge of **SPC**.

Both the read register and write register commands are completed in 16 clock pulses or in multiples of 8 in case of multiple read/write bytes. Bit duration is the time between two falling edges of **SPC**. The first bit (bit 0) starts at the first falling edge of **SPC** after the falling edge of **CS_M** while the last bit (bit 15, bit 23, ...) starts at the last falling edge of SPC just before the rising edge of **CS_M**.

bit 0: $\overline{RW}$ bit. When 0, the data DI(7:0) is written into the device. When 1, the data DO(7:0) from the device is read. In latter case, the chip will drive **SDO_M** at the start of bit 8.

bit 1: $\overline{MS}$ bit. When 0, the address will remain unchanged in multiple read/write commands. When 1, the address is auto-incremented in multiple read/write commands.

bit 2-7: address AD(5:0). This is the address field of the indexed register.

bit 8-15: data DI(7:0) (write mode). This is the data that is written into the device (MSb first).

bit 8-15: data DO(7:0) (read mode). This is the data that is read from the device (MSb first).

In multiple read/write commands further blocks of 8 clock periods will be added. When the $\overline{MS}$ bit is '0', the address used to read/write data remains the same for every block. When the $\overline{MS}$ bit is '1', the address used to read/write data is increased at every block.

The function and the behavior of **SDI** and **SDO_M** remain unchanged.

5.3.1 SPI read

Figure 23. Magnetic sensor SPI read protocol

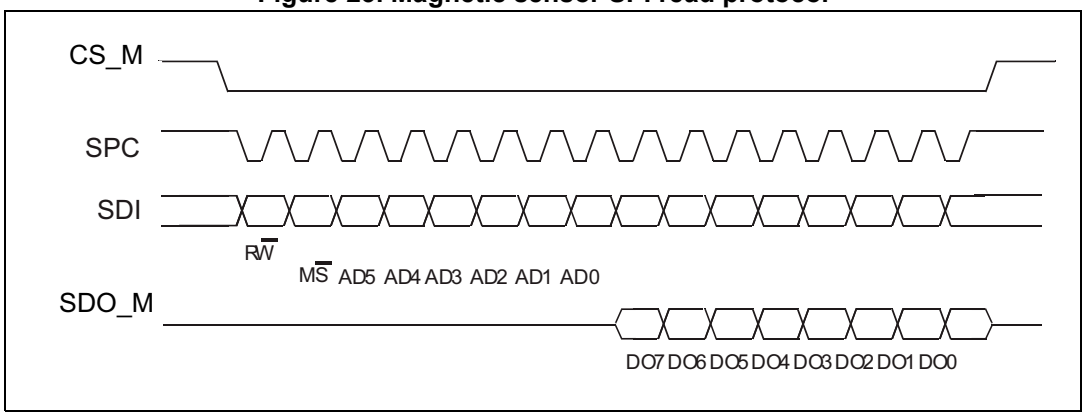

The SPI read command is performed with 16 clock pulses. A multiple byte read command is performed by adding blocks of 8 clock pulses to the previous one.

bit 0: READ bit. The value is 1.

bit 1: MS bit. When 0, does not increment the address; when 1, increments the address in multiple reads.

bit 2-7: address AD(5:0). This is the address field of the indexed register.

bit 8-15: data DO(7:0) (read mode). This is the data that will be read from the device (MSb first).

bit 16-... : data DO(...-8). Further data in multiple byte reads.

Figure 24. Multiple byte SPI read protocol (2-byte example)

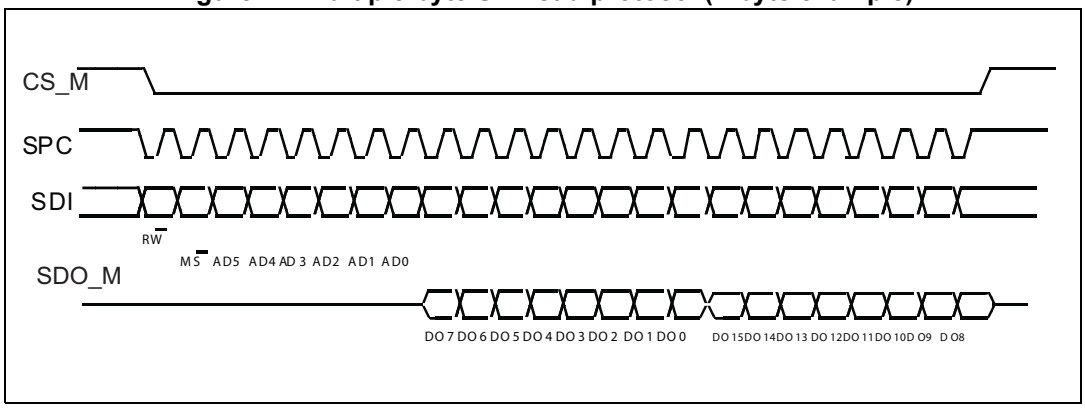

5.3.2 SPI write

Figure 25. Magnetic sensor SPI write protocol

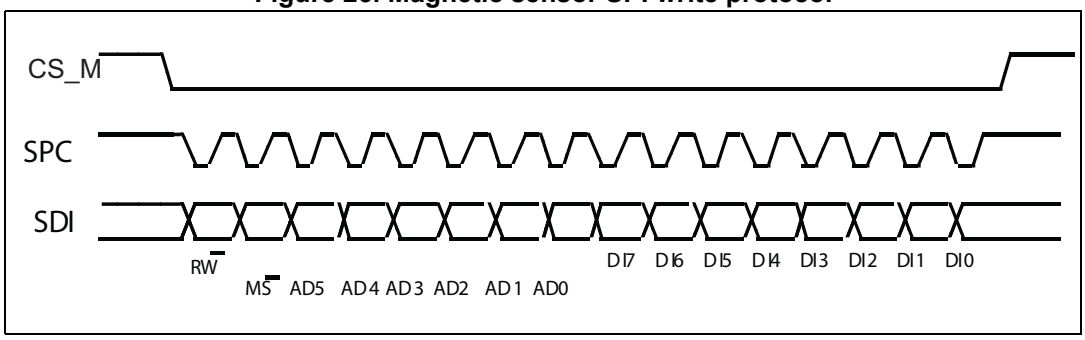

The SPI write command is performed with 16 clock pulses. A multiple byte write command is performed by adding blocks of 8 clock pulses to the previous one.

bit 0: WRITE bit. The value is 0.

bit 1: $\overline{MS}$ bit. When 0, does not increment the address; when 1, increments the address in multiple writes.

bit 2 -7: address AD(5:0). This is the address field of the indexed register.

bit 8-15: data DI(7:0) (write mode). This is the data that is written inside the device (MSb first).

bit 16-... : data DI(...-8). Further data in multiple byte writes.

Figure 26. Multiple byte SPI write protocol (2-byte example)

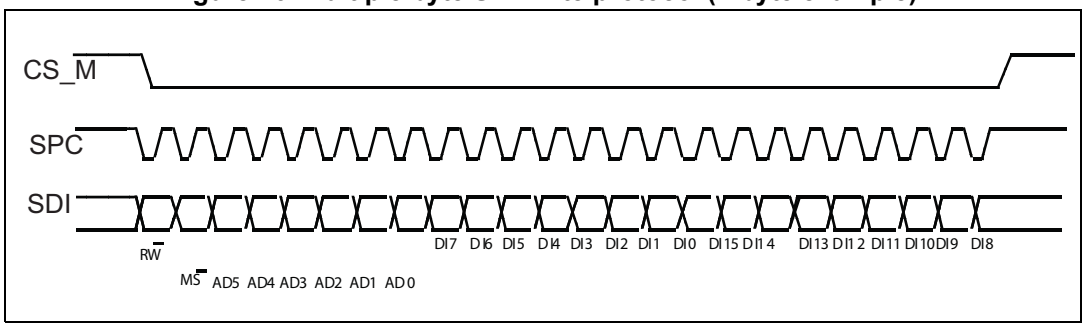

5.3.3 SPI read in 3-wire mode

3-wire mode is entered by setting the SIM bit to '1' (SPI serial interface mode selection) in *CTRL_REG3_M (22h)*.

When 3-wire mode is used, the SDO_M pin has to be connected to GND or Vdd_IO.

Figure 27. SPI read protocol in 3-wire mode

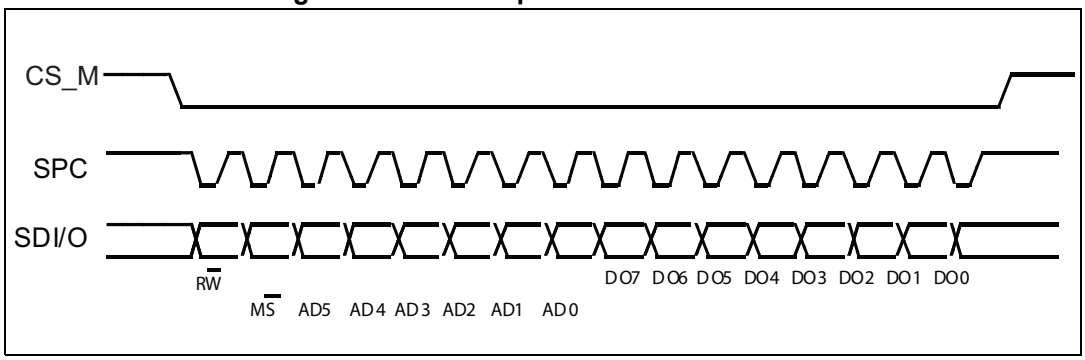

The SPI read command is performed with 16 clock pulses:

bit 0: READ bit. The value is 1.

bit 1: $\overline{MS}$ bit. When 0, does not increment the address; when 1, increments the address in multiple reads.

bit 2-7: address AD(5:0). This is the address field of the indexed register.

bit 8-15: data DO(7:0) (read mode). This is the data that is read from the device (MSb first).

A multiple read command is also available in 3-wire mode.

6 Register mapping

The table given below provides a list of the 8/16-bit registers embedded in the device and the corresponding addresses.

Table 21. Accelerometer and gyroscope register address map

Name	Type	Register address		Default	Note
		Hex	Binary		
Reserved	--	00-03	--	--	Reserved
ACT_THS	r/w	04	00000100	00000000	
ACT_DUR	r/w	05	00000101	00000000	
INT_GEN_CFG_XL	r/w	06	00000110	00000000	
INT_GEN_THS_X_XL	r/w	07	00000111	00000000	
INT_GEN_THS_Y_XL	r/w	08	00001000	00000000	
INT_GEN_THS_Z_XL	r/w	09	00001001	00000000	
INT_GEN_DUR_XL	r/w	0A	00001010	00000000	
REFERENCE_G	r/w	0B	00001011	00000000	
INT1_CTRL	r/w	0C	00001100	00000000	
INT2_CTRL	r/w	0D	00001101	00000000	
Reserved	--	0E	--	--	Reserved
WHO_AM_I	r	0F	00001111	01101000	
CTRL_REG1_G	r/w	10	00010000	00000000	
CTRL_REG2_G	r/w	11	00010001	00000000	
CTRL_REG3_G	r/w	12	00010010	00000000	
ORIENT_CFG_G	r/w	13	00010011	00000000	
INT_GEN_SRC_G	r	14	00010100	output	
OUT_TEMP_L	r	15	00010101	output	
OUT_TEMP_H	r	16	00010110	output	
STATUS_REG	r	17	00010111	output	
OUT_X_L_G	r	18	00011000	output	
OUT_X_H_G	r	19	00011001	output	
OUT_Y_L_G	r	1A	00011010	output	
OUT_Y_H_G	r	1B	00011011	output	
OUT_Z_L_G	r	1C	00011100	output	
OUT_Z_H_G	r	1D	00011101	output	
CTRL_REG4	r/w	1E	00011110	00111000	
CTRL_REG5_XL	r/w	1F	00011111	00111000	

Table 21. Accelerometer and gyroscope register address map (continued)

Name	Type	Register address		Default	Note
		Hex	Binary		
CTRL_REG6_XL	r/w	20	00100000	00000000	
CTRL_REG7_XL	r/w	21	00100001	00000000	
CTRL_REG8	r/w	22	00100010	00000100	
CTRL_REG9	r/w	23	00100011	00000000	
CTRL_REG10	r/w	24	00100100	00000000	
Reserved	--	25	--	--	Reserved
INT_GEN_SRC_XL	r	26	00100110	output	
STATUS_REG	r	27	00100111	output	
OUT_X_L_XL	r	28	00101000	output	
OUT_X_H_XL	r	29	00101001	output	
OUT_Y_L_XL	r	2A	00101010	output	
OUT_Y_H_XL	r	2B	00101011	output	
OUT_Z_L_XL	r	2C	00101100	output	
OUT_Z_H_XL	r	2D	00101101	output	
FIFO_CTRL	r/w	2E	00101110	00000000	
FIFO_SRC	r	2F	00101111	output	
INT_GEN_CFG_G	r/w	30	00110000	00000000	
INT_GEN_THS_XH_G	r/w	31	00110001	00000000	
INT_GEN_THS_XL_G	r/w	32	00110010	00000000	
INT_GEN_THS_YH_G	r/w	33	00110011	00000000	
INT_GEN_THS_YL_G	r/w	34	00110100	00000000	
INT_GEN_THS_ZH_G	r/w	35	00110101	00000000	
INT_GEN_THS_ZL_G	r/w	36	00110110	00000000	
INT_GEN_DUR_G	r/w	37	00110111	00000000	
Reserved	r	38-7F	--	--	Reserved

Table 22. Magnetic sensor register address map

Name	Type	Register address		Default	Comment
		Hex	Binary		
Reserved		00 - 04	--	--	Reserved
OFFSET_X_REG_L_M	r/w	05		00000000	Offset in order to compensate environmental effects
OFFSET_X_REG_H_M	r/w	06		00000000	
OFFSET_Y_REG_L_M	r/w	07		00000000	
OFFSET_Y_REG_H_M	r/w	08		00000000	
OFFSET_Z_REG_L_M	r/w	09		00000000	
OFFSET_Z_REG_H_M	r/w	0A		00000000	
Reserved		0B - 0E	--	--	Reserved
WHO_AM_I_M	r	0F	0000 1111	00111101	Magnetic Who I am ID
Reserved		10 - 1F	--	--	Reserved
CTRL_REG1_M	r/w	20	0010 0000	00010000	Magnetic control registers
CTRL_REG2_M	r/w	21	0010 0001	00000000	
CTRL_REG3_M	r/w	22	0010 0010	00000011	
CTRL_REG4_M	r/w	23	0010 0011	00000000	
CTRL_REG5_M	r/w	24	0010 0100	00000000	
Reserved		25 - 26	--	--	Reserved
STATUS_REG_M	r	27	0010 0111	Output	
OUT_X_L_M	r	28	0010 1000	Output	Magnetic output registers
OUT_X_H_M	r	29	0010 1001	Output	
OUT_Y_L_M	r	2A	0010 1010	Output	
OUT_Y_H_M	r	2B	0010 1011	Output	
OUT_Z_L_M	r	2C	0010 1100	Output	
OUT_Z_H_M	r	2D	0010 1101	Output	
Reserved	r	2E-2F	--	--	Reserved
INT_CFG_M	rw	30	00110000	00001000	Magnetic interrupt configuration register
INT_SRC_M	r	31	00110001	00000000	Magnetic interrupt generator status register
INT_THS_L_M	r	32	00110010	00000000	Magnetic interrupt generator threshold
INT_THS_H_M	r	33	00110011	00000000	

Registers marked as *Reserved* must not be changed. Writing to those registers may cause permanent damage to the device.

To guarantee proper behavior of the device, all registers addresses not listed in the above table must not be accessed and the content stored on those registers must not be changed.

The content of the registers that are loaded at boot should not be changed. They contain the factory calibration values. Their content is automatically restored when the device is powered up.

7 Accelerometer and gyroscope register description

The device contains a set of registers which are used to control its behavior and to retrieve linear acceleration, angular rate and temperature data. The register addresses, made up of 7 bits, are used to identify them and to write the data through the serial interface.

7.1 ACT_THS (04h)

Activity threshold register.

Table 23. ACT_THS register

SLEEP_ON _INACT_EN	ACT_THS 6	ACT_THS 5	ACT_THS 4	ACT_THS 3	ACT_THS 2	ACT_TH S1	ACT_THS 0

Table 24. ACT_THS register description

SLEEP_ON_ INACT_EN	Gyroscope operating mode during inactivity. Default value: 0 (0: gyroscope in power-down; 1: gyroscope in sleep mode)
ACT_THS [6:0]	Inactivity threshold. Default value: 000 0000

7.2 ACT_DUR (05h)

Inactivity duration register.

Table 25. ACT_DUR register

ACT_DUR 7	ACT_DUR 6	ACT_DUR 5	ACT_DUR 4	ACT_DUR 3	ACT_DUR 2	ACT_DUR 1	ACT_DUR 0

Table 26. ACT_DUR register description

ACT_DUR [7:0]	Inactivity duration. Default value: 0000 0000

7.3 INT_GEN_CFG_XL (06h)

Linear acceleration sensor interrupt generator configuration register.

Table 27. INT_GEN_CFG_XL register

AOI_XL	6D	ZHIE_XL	ZLIE_XL	YHIE_XL	YLIE_XL	XHIE_XL	XLIE_XL

Table 28. INT_GEN_CFG_XL register description

AOI_XL	AND/OR combination of accelerometer's interrupt events. Default value: 0 (0: OR combination; 1: AND combination)
6D	6-direction detection function for interrupt. Default value: 0 (0: disabled; 1: enabled)
ZHIE_XL	Enable interrupt generation on accelerometer's Z-axis high event. Default value: 0 (0: disable interrupt request; 1: interrupt request on measured acceleration value higher than preset threshold)
ZLIE_XL	Enable interrupt generation on accelerometer's Z-axis low event. Default value: 0 (0: disable interrupt request; 1: interrupt request on measured acceleration value lower than preset threshold)
YHIE_XL	Enable interrupt generation on accelerometer's Y-axis high event. Default value: 0 (0: disable interrupt request; 1: interrupt request on measured acceleration value higher than preset threshold)
YLIE_XL	Enable interrupt generation on accelerometer's Y-axis low event. Default value: 0 (0: disable interrupt request; 1: interrupt request on measured acceleration value lower than preset threshold)
XHIE_XL	Enable interrupt generation on accelerometer's X-axis high event. Default value: 0 (0: disable interrupt request; 1: interrupt request on measured acceleration value higher than preset threshold)
XLIE_XL	Enable interrupt generation on accelerometer's X-axis low event. Default value: 0 (0: disable interrupt request; 1: interrupt request on measured acceleration value lower than preset threshold)

7.4 INT_GEN_THS_X_XL (07h)

Linear acceleration sensor interrupt threshold register.

Table 29. INT_GEN_THS_X_XL register

THS_XL_X7	THS_XL_X6	THS_XL_X5	THS_XL_X4	THS_XL_X3	THS_XL_X2	THS_XL_X1	THS_XL_X0

Table 30. INT_GEN_THS_X_XL register description

THS_XL_X [7:0]	X-axis interrupt threshold. Default value: 0000 0000

7.5 INT_GEN_THS_Y_XL (08h)

Linear acceleration sensor interrupt threshold register.

Table 31. INT_GEN_THS_Y_XL register

THS_XL_Y7	THS_XL_Y6	THS_XL_Y5	THS_XL_Y4	THS_XL_Y3	THS_XL_Y2	THS_XL_Y1	THS_XL_Y0

Table 32. INT_GEN_THS_Y_XL register description

THS_XL_Y [7:0]	Y-axis interrupt threshold. Default value: 0000 0000

7.6 INT_GEN_THS_Z_XL (09h)

Linear acceleration sensor interrupt threshold register.

Table 33. INT_GEN_THS_Z_XL register

THS_XL_Z 7	THS_XL_Z 6	THS_XL_Z 5	THS_XL_Z 4	THS_XL_Z 3	THS_XL_Z 2	THS_XL_Z 1	THS_XL_Z 0

Table 34. INT_GEN_THS_Z_XL register description

THS_XL_Z [7:0]	Z-axis interrupt threshold. Default value: 0000 0000

7.7 INT_GEN_DUR_XL (0Ah)

Linear acceleration sensor interrupt duration register.

Table 35. INT_GEN_DUR_XL register

WAIT_XL	DUR_XL6	DUR_XL5	DUR_XL4	DUR_XL3	DUR_XL2	DUR_XL1	DUR_XL0

Table 36. INT_GEN_DUR_XL register description

WAIT_XL	Wait function enabled on duration counter. Default value: 0 (0: wait function off; 1: wait for DUR_XL [6:0] samples before exiting interrupt)
DUR_XL [6:0]	Enter/exit interrupt duration value. Default value: 000 0000

7.8 REFERENCE_G (0Bh)

Angular rate sensor reference value register for digital high-pass filter (r/w).

Table 37. REFERENCE_G register

REF7_G	REF6_G	REF5_G	REF4_G	REF3_G	REF2_G	REF1_G	REF0_G

Table 38. REFERENCE_G register description

REF_G [7:0]	Reference value for gyroscope's digital high-pass filter (r/w). Default value: 0000 0000

7.9 INT1_CTRL (0Ch)

INT1_A/G pin control register.

Table 39. INT1_CTRL register

INT1_IG _G	INT1_IG_ XL	INT1_ FSS5	INT1_OVR	INT1_FTH	INT1_ Boot	INT1_ DRDY_G	INT1_ DRDY_XL

Table 40. INT1_CTRL register description

INT1_IG_G	Gyroscope interrupt enable on INT 1_A/G pin. Default value: 0 (0: disabled; 1: enabled)
INT_ IG_XL	Accelerometer interrupt generator on INT 1_A/G pin. Default value: 0 (0: disabled; 1: enabled)
INT_ FSS5	FSS5 interrupt enable on INT 1_A/G pin. Default value: 0 (0: disabled; 1: enabled)
INT_OVR	Overrun interrupt on INT 1_A/G pin. Default value: 0 (0: disabled; 1: enabled)
INT_FTH	FIFO threshold interrupt on INT 1_A/G pin. Default value: 0 (0: disabled; 1: enabled)
INT_ Boot	Boot status available on INT 1_A/G pin. Default value: 0 (0: disabled; 1: enabled)
INT_DRDY_G	Gyroscope data ready on INT 1_A/G pin. Default value: 0 (0: disabled; 1: enabled)
INT_DRDY_XL	Accelerometer data ready on INT 1_A/G pin. Default value: 0 (0: disabled; 1: enabled)

7.10 INT2_CTRL (0Dh)

INT2_A/G pin control register.

Table 41. INT2_CTRL register

INT2_IN ACT	0	INT2_ FSS5	INT2_OVR	INT2_FTH	INT2_ DRDY_ TEMP	INT2_ DRDY_G	INT2_ DRDY_XL

Table 42. INT2_CTRL register description

INT2_INACT	Inactivity interrupt output signal. Default value: 0 (0: no interrupt has been generated; 1: one or more interrupt events have been generated)
INT2_ FSS5	FSS5 interrupt enable on INT2_A/G pin. Default value: 0 (0: disabled; 1: enabled)
INT2_OVR	Overrun interrupt on INT2_A/G pin. Default value: 0 (0: disabled; 1: enabled)
INT2_FTH	FIFO threshold interrupt on INT2_A/G pin. Default value: 0 (0: disabled; 1: enabled)
INT2_ DRDY_TEMP	Temperature data ready on INT2_A/G pin. Default value: 0 (0: disabled; 1: enabled)
INT2_DRDY_G	Gyroscope data ready on INT2_A/G pin. Default value: 0 (0: disabled; 1: enabled)
INT2_DRDY_XL	Accelerometer data ready on INT2_A/G pin. Default value: 0 (0: disabled; 1: enabled)

7.11 WHO_AM_I (0Fh)

Who_AM_I register.

Table 43. WHO_AM_I register

0	1	1	0	1	0	0	0

7.12 CTRL_REG1_G (10h)

Angular rate sensor Control Register 1.

Table 44. CTRL_REG1_G register

ODR_G2	ODR_G1	ODR_G0	FS_G1	FS_G0	0(1)	BW_G1	BW_G0

1. This bit must be set to '0' for the correct operation of the device.

Table 45. CTRL_REG1_G register description

ODR_G [2:0]	Gyroscope output data rate selection. Default value: 000 (Refer to *Table 46* and *Table 47*)
FS_G [1:0]	Gyroscope full-scale selection. Default value: 00 (00: 245 dps; 01: 500 dps; 10: Not Available; 11: 2000 dps)
BW_G [1:0]	Gyroscope bandwidth selection. Default value: 00

ODR_G [2:0] are used to set ODR selection when both the accelerometer and gyroscope are activated. BW_G [1:0] are used to set gyroscope bandwidth selection.

The following table summarizes all frequencies available for each combination of the ODR_G / BW_G bits after LPF1 (see *Table 46*) and LPF2 (see *Table 47*) when both the accelerometer and gyroscope are activated. For more details regarding signal processing please refer to *Figure 28*.

Table 46. ODR and BW configuration setting (after LPF1)

ODR_G2	ODR_G1	ODR_G0	ODR [Hz]	Cutoff [Hz](1)
0	0	0	Power-down	n.a.
0	0	1	14.9	5
0	1	0	59.5	19
0	1	1	119	38
1	0	0	238	76
1	0	1	476	100
1	1	0	952	100
1	1	1	n.a.	n.a.

1. Values in the table are indicative and can vary proportionally with the specific ODR value.

Table 47. ODR and BW configuration setting (after LPF2)

ODR_G [2:0]	BW_G [1:0]	ODR [Hz]	Cutoff [Hz](1)
000	00	Power-down	n.a.
000	01	Power-down	n.a.
000	10	Power-down	n.a.
000	11	Power-down	n.a.
001	00	14.9	n.a.
001	01	14.9	n.a.
001	10	14.9	n.a.
001	11	14.9	n.a.
010	00	59.5	16
010	01	59.5	16
010	10	59.5	16
010	11	59.5	16
011	00	119	14
011	01	119	31
011	10	119	31
011	11	119	31
100	00	238	14
100	01	238	29
100	10	238	63
100	11	238	78
101	00	476	21
101	01	476	28
101	10	476	57
101	11	476	100
110	00	952	33
110	01	952	40
110	10	952	58
110	11	952	100
111	00	n.a.	n.a.
111	01	n.a.	n.a.
111	10	n.a.	n.a.
111	11	n.a.	n.a.

1. Values in the table are indicative and can vary proportionally with the specific ODR value.

7.13 CTRL_REG2_G (11h)

Angular rate sensor Control Register 2.

Table 48. CTRL_REG2_G register

0(1)	0(1)	0(1)	0(1)	INT_SEL1	INT_SEL0	OUT_SEL1	OUT_SEL0

1. These bits must be set to '0' for the correct operation of the device

Table 49. CTRL_REG2_G register description

INT_SEL [1:0]	INT selection configuration. Default value: 00 (Refer to *Figure 28*)
OUT_SEL [1:0]	Out selection configuration. Default value: 00 (Refer to *Figure 28*)

Figure 28. INT_SEL and OUT_SEL configuration gyroscope block diagram

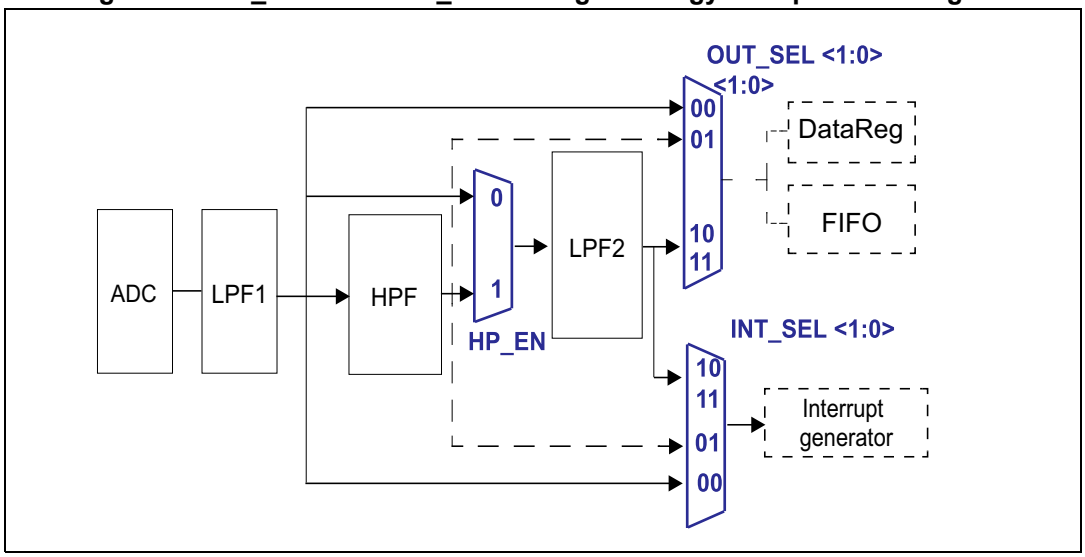

7.14 CTRL_REG3_G (12h)

Angular rate sensor Control Register 3.

Table 50. CTRL_REG3_G register

LP_mode	HP_EN	0(1)	0(1)	HPCF3_G	HPCF2_G	HPCF1_G	HPCF0_G

1. These bits must be set to '0' for the correct operation of the device

Table 51. CTRL_REG3_G register description

LP_mode	Low-power mode enable. Default value: 0 (0: Low-power disabled; 1: Low-power enabled)
HP_EN	High-pass filter enable. Default value: 0 (0: HPF disabled; 1: HPF enabled, refer to *Figure 28*)
HPCF_G [3:0]	Gyroscope high-pass filter cutoff frequency selection. Default value: 0000 Refer to *Table 52*.

Table 52. Gyroscope high-pass filter cutoff frequency configuration [Hz](1)

HPCF_G [3:0]	ODR= 14.9 Hz	ODR= 59.5 Hz	ODR= 119 Hz	ODR= 238 Hz	ODR= 476 Hz	ODR= 952 Hz
0000	1	4	8	15	30	57
0001	0.5	2	4	8	15	30
0010	0.2	1	2	4	8	15
0011	0.1	0.5	1	2	4	8
0100	0.05	0.2	0.5	1	2	4
0101	0.02	0.1	0.2	0.5	1	2
0110	0.01	0.05	0.1	0.2	0.5	1
0111	0.005	0.02	0.05	0.1	0.2	0.5
1000	0.002	0.01	0.02	0.05	0.1	0.2
1001	0.001	0.005	0.01	0.02	0.05	0.1

1. Values in the table are indicative and can vary proportionally with the specific ODR value.

7.15 ORIENT_CFG_G (13h)

Angular rate sensor sign and orientation register.

Table 53. ORIENT_CFG_G register

0(1)	0(1)	SignX_G	SignY_G	SignZ_G	Orient_2	Orient_1	Orient_0

1. These bits must be set to ‘0’ for the correct operation of the device.

Table 54. ORIENT_CFG_G register description

SignX_G	Pitch axis (X) angular rate sign. Default value: 0 (0: positive sign; 1: negative sign)
SignY_G	Roll axis (Y) angular rate sign. Default value: 0 (0: positive sign; 1: negative sign)
SignZ_G	Yaw axis (Z) angular rate sign. Default value: 0 (0: positive sign; 1: negative sign)
Orient [2:0]	Directional user orientation selection. Default value: 000

7.16 INT_GEN_SRC_G (14h)

Angular rate sensor interrupt source register.

Table 55. INT_GEN_SRC_G register

0	IA_G	ZH_G	ZL_G	YH_G	YL_G	XH_G	XL_G

Table 56. INT_GEN_SRC_G register description

IA_G	Interrupt active. Default value: 0 (0: no interrupt has been generated; 1: one or more interrupts have been generated)
ZH_G	Yaw (Z) high. Default value: 0 (0: no interrupt, 1: Z high event has occurred)
ZL_G	Yaw (Z) low. Default value: 0 (0: no interrupt; 1: Z low event has occurred)
YH_G	Roll (Y) high. Default value: 0 (0: no interrupt, 1: Y high event has occurred)
YL_G	Roll (Y) low. Default value: 0 (0: no interrupt, 1: Y low event has occurred)
XH_G	Pitch (X) high. Default value: 0 (0: no interrupt, 1: X high event has occurred)
XL_G	Pitch (X) low. Default value: 0 (0: no interrupt, 1: X low event has occurred)

7.17 OUT_TEMP_L (15h), OUT_TEMP_H (16h)

Temperature data output register. L and H registers together express a 16-bit word in two's complement right-justified.

Table 57. OUT_TEMP_L register

Temp7	Temp6	Temp5	Temp4	Temp3	Temp2	Temp1	Temp0

Table 58. OUT_TEMP_H register

Temp11	Temp11	Temp11	Temp11	Temp11	Temp10	Temp9	Temp8

Table 59. OUT_TEMP register description

Temp [11:0]	Temperature sensor output data. The value is expressed as two's complement sign extended on the MSB.

7.18 STATUS_REG (17h)

Status register.

Table 60. STATUS_REG register

0	IG_XL	IG_G	INACT	BOOT_ STATUS	TDA	GDA	XLDA

Table 61. STATUS_REG register description

IG_XL	Accelerometer interrupt output signal. Default value: 0 (0: no interrupt has been generated; 1: one or more interrupt events have been generated)
IG_G	Gyroscope interrupt output signal. Default value: 0 (0: no interrupt has been generated; 1: one or more interrupt events have been generated)
INACT	Inactivity interrupt output signal. Default value: 0 (0: no interrupt has been generated; 1: one or more interrupt events have been generated)
BOOT_ STATUS	Boot running flag signal. Default value: 0 (0: no boot running; 1: boot running)
TDA	Temperature sensor new data available. Default value: 0 (0: new data is not yet available; 1: new data is available)
GDA	Gyroscope new data available. Default value: 0 (0: a new set of data is not yet available; 1: a new set of data is available)
XLDA	Accelerometer new data available. Default value: 0 (0: a new set of data is not yet available; 1: a new set of data is available)

7.19 OUT_X_G (18h - 19h)

Angular rate sensor pitch axis (X) angular rate output register. The value is expressed as a 16-bit word in two's complement.

7.20 OUT_Y_G (1Ah - 1Bh)

Angular rate sensor roll axis (Y) angular rate output register. The value is expressed as a 16-bit word in two's complement.

7.21 OUT_Z_G (1Ch - 1Dh)

Angular rate sensor Yaw axis (Z) angular rate output register. The value is expressed as a 16-bit word in two's complement.

7.22 CTRL_REG4 (1Eh)

Control register 4.

Table 62. CTRL_REG4 register

0(1)	0(1)	Zen_G	Yen_G	Xen_G	0(1)	LIR_XL1	4D_XL1

1. These bits must be set to '0' for the correct operation of the device.

Table 63. CTRL_REG4 register description

Zen_G	Gyroscope's Yaw axis (Z) output enable. Default value: 1 (0: Z-axis output disabled; 1: Z-axis output enabled)
Yen_G	Gyroscope's roll axis (Y) output enable. Default value: 1 (0: Y-axis output disabled; 1: Y-axis output enabled)
Xen_G	Gyroscope's pitch axis (X) output enable. Default value: 1 (0: X -xis output disabled; 1: X-axis output enabled)
LIR_XL1	Latched Interrupt. Default value: 0 (0: interrupt request not latched; 1: interrupt request latched)
4D_XL1	4D option enabled on Interrupt. Default value: 0 (0: interrupt generator uses 6D for position recognition; 1: interrupt generator uses 4D for position recognition)

7.23 CTRL_REG5_XL (1Fh)

Linear acceleration sensor Control Register 5.

Table 64. CTRL_REG5_XL register

DEC_1	DEC_0	Zen_XL	Yen_XL	Xen_XL	0(1)	0(1)	0(1)

1. These bits must be set to '0' for the correct operation of the device.

Table 65. CTRL_REG5_XL register description

DEC_ [0:1]	Decimation of acceleration data on OUT REG and FIFO. Default value: 00 (00: no decimation; 01: update every 2 samples; 10: update every 4 samples; 11: update every 8 samples)
Zen_XL	Accelerometer's Z-axis output enable. Default value: 1 (0: Z-axis output disabled; 1: Z-axis output enabled)
Yen_XL	Accelerometer's Y-axis output enable. Default value: 1 (0: Y-axis output disabled; 1: Y-axis output enabled)
Xen_XL	Accelerometer's X-axis output enable. Default value: 1 (0: X-axis output disabled; 1: X-axis output enabled)

7.24 CTRL_REG6_XL (20h)

Linear acceleration sensor Control Register 6.

Table 66. CTRL_REG6_XL register

ODR_XL2	ODR_XL1	ODR_XL0	FS1_XL	FS0_XL	BW_SCAL_ODR	BW_XL1	BW_XL0

Table 67. CTRL_REG6_XL register description

ODR_XL [2:0]	Output data rate and power mode selection. default value: 000 (see *Table 68*)
FS_XL [1:0]	Accelerometer full-scale selection. Default value: 00 (00: ±2*g*; 01: ±16 *g;* 10: ±4 *g*; 11: ±8 *g*)
BW_SCAL_ ODR	Bandwidth selection. Default value: 0 (0: bandwidth determined by ODR selection: - BW = 408 Hz when ODR = 952 Hz, 50 Hz, 10 Hz; - BW = 211 Hz when ODR = 476 Hz; - BW = 105 Hz when ODR = 238 Hz; - BW = 50 Hz when ODR = 119 Hz; 1: bandwidth selected according to BW_XL [2:1] selection)
BW_XL [1:0]	Anti-aliasing filter bandwidth selection. Default value: 00 (00: 408 Hz; 01: 211 Hz; 10: 105 Hz; 11: 50 Hz)

ODR_XL [2:0] is used to set power mode and ODR selection. *Table 68* indicates all the frequencies available when only the accelerometer is activated.

Table 68. ODR register setting (accelerometer only mode)

ODR_XL2	ODR_XL1	ODR_XL0	ODR selection [Hz]
0	0	0	Power-down
0	0	1	10 Hz
0	1	0	50 Hz
0	1	1	119 Hz
1	0	0	238 Hz
1	0	1	476 Hz
1	1	0	952 Hz
1	1	1	n.a.

7.25 CTRL_REG7_XL (21h)

Linear acceleration sensor Control Register 7.

Table 69. CTRL_REG7_XL register

HR	DCF1	DCF0	0(1)	0(1)	FDS	0(1)	HPIS1

1. These bits must be set to ‘0’ for the correct operation of the device

Table 70. CTRL_REG7_XL register description

HR	High resolution mode for accelerometer enable. Default value: 0 (0: disabled; 1: enabled). Refer to *Table 71*
DCF[1:0]	Accelerometer digital filter (high pass and low pass) cutoff frequency selection: the band-width of the high-pass filter depends on the selected ODR. Refer to *Table 71*
FDS	Filtered data selection. Default value: 0 (0: internal filter bypassed; 1: data from internal filter sent to output register and FIFO)
HPIS1	High-pass filter enabled for acceleration sensor interrupt function on Interrupt. Default value: 0 (0: filter bypassed; 1: filter enabled)

Table 71. Low pass cutoff frequency in high resolution mode (HR = 1)

HR	CTRL_REG7 (DCF [1:0])	LP cutoff freq. [Hz]
1	00	ODR/50
1	01	ODR/100
1	10	ODR/9
1	11	ODR/400

7.26 CTRL_REG8 (22h)

Control register 8.

Table 72. CTRL_REG8 register

BOOT	BDU	H_LACTIVE	PP_OD	SIM	IF_ADD_INC	BLE	SW_RESET

Table 73. CTRL_REG8 register description

BOOT	Reboot memory content. Default value: 0 (0: normal mode; 1: reboot memory content(1))
BDU	Block data update. Default value: 0 (0: continuous update; 1: output registers not updated until MSB and LSB read)
H_LACTIVE	Interrupt activation level. Default value: 0 (0: interrupt output pins active high; 1: interrupt output pins active low)
PP_OD	Push-pull/open-drain selection on the INT1_A/G pin and INT2_A/G pin. Default value: 0 (0: push-pull mode; 1: open-drain mode)
SIM	SPI serial interface mode selection. Default value: 0 (0: 4-wire interface; 1: 3-wire interface).
IF_ADD_INC	Register address automatically incremented during a multiple byte access with a serial interface (I^2C or SPI). Default value: 1 (0: disabled; 1: enabled)
BLE	Big/Little Endian data selection. Default value 0 (0: data LSB @ lower address; 1: data MSB @ lower address)
SW_RESET	Software reset. Default value: 0 (0: normal mode; 1: reset device) This bit is cleared by hardware after next flash boot.

1. Boot request is executed as soon as internal oscillator is turned-on. It is possible to set bit while in power-down mode, in this case it will be served at the next normal mode or sleep mode.

7.27 CTRL_REG9 (23h)

Control register 9.

Table 74. CTRL_REG9 register

0(1)	SLEEP_G	0(1)	FIFO_ TEMP_EN	DRDY_ mask_bit	I2C_DISAB LE	FIFO_EN	STOP_ON _FTH

1. These bits must be set to '0' for the correct operation of the device

Table 75. CTRL_REG9 register description

SLEEP_G	Gyroscope sleep mode enable. Default value: 0 (0: disabled; 1: enabled)
FIFO_TEMP_EN	Temperature data storage in FIFO enable. Default value: 0 (0: temperature data not stored in FIFO; 1: temperature data stored in FIFO)
DRDY_mask_bit	Data available enable bit. Default value: 0 (0: DA timer disabled; 1: DA timer enabled)
I2C_DISABLE	Disable I^2C interface. Default value: 0 (0: both I^2C and SPI enabled; 1: I^2C disabled, SPI only)
FIFO_EN	FIFO memory enable. Default value: 0 (0: disabled; 1: enabled)
STOP_ON_FTH	Enable FIFO threshold level use. Default value: 0 (0: FIFO depth is not limited; 1: FIFO depth is limited to threshold level)

7.28 CTRL_REG10 (24h)

Control register 10.

Table 76. CTRL_REG10 register

0(1)	0(1)	0(1)	0(1)	0(1)	ST_G	0(1)	ST_XL

1. These bits must be set to '0' for the correct operation of the device

Table 77. CTRL_REG10 register description

ST_G	Angular rate sensor self-test enable. Default value: 0 (0: Self-test disabled; 1: Self-test enabled)
ST_XL	Linear acceleration sensor self-test enable. Default value: 0 (0: Self-test disabled; 1: Self-test enabled)

7.29 INT_GEN_SRC_XL (26h)

Linear acceleration sensor interrupt source register.

Table 78. INT_GEN_SRC_XL register

0	IA_XL	ZH_XL	ZL_XL	YH_XL	YL_XL	XH_XL	XL_XL

Table 79. INT_GEN_SRC_XL register description

IA_XL	Interrupt active. Default value: 0. (0: no interrupt has been generated; 1: one or more interrupts have been generated)
ZH_XL	Accelerometer's Z high event. Default value: 0 (0: no interrupt, 1: Z high event has occurred)
ZL_XL	Accelerometer's Z low event. Default value: 0 (0: no interrupt; 1: Z low event has occurred)
YH_XL	Accelerometer's Y high event. Default value: 0 (0: no interrupt, 1: Y high event has occurred)
YL_XL	Accelerometer's Y low event. Default value: 0 (0: no interrupt, 1: Y low event has occurred)
XH_XL	Accelerometer's X high event. Default value: 0 (0: no interrupt, 1: X high event has occurred)
XL_XL	Accelerometer's X low. event. Default value: 0 (0: no interrupt, 1: X low event has occurred)

7.30 STATUS_REG (27h)

Status register.

Table 80. STATUS_REG register

0	IG_XL	IG_G	INACT	BOOT_ STATUS	TDA	GDA	XLDA

Table 81. STATUS_REG register description

IG_XL	Accelerometer interrupt output signal. Default value: 0 (0: no interrupt has been generated; 1: one or more interrupt events have been generated)
IG_G	Gyroscope interrupt output signal. Default value: 0 (0: no interrupt has been generated; 1: one or more interrupt events have been generated)
INACT	Inactivity interrupt output signal. Default value: 0 (0: no interrupt has been generated; 1: one or more interrupt events have been generated)
BOOT_ STATUS	Boot running flag signal. Default value: 0 (0: no boot running; 1: boot running)
TDA	Temperature sensor new data available. Default value: 0 (0: a new data is not yet available; 1: a new data is available)
GDA	Gyroscope new data available. Default value: 0 (0: a new set of data is not yet available; 1: a new set of data is available)
XLDA	Accelerometer new data available. Default value: 0 (0: a new set of data is not yet available; 1: a new set of data is available)

7.31 OUT_X_XL (28h - 29h)

Linear acceleration sensor X-axis output register. The value is expressed as a 16-bit word in two's complement.

7.32 OUT_Y_XL (2Ah - 2Bh)

Linear acceleration sensor Y-axis output register. The value is expressed as a 16-bit word in two's complement.

7.33 OUT_Z_XL (2Ch - 2Dh)

Linear acceleration sensor Z-axis output register. The value is expressed as a 16-bit word in two's complement.

7.34 FIFO_CTRL (2Eh)

FIFO control register.

Table 82. FIFO_CTRL register

FMODE2	FMODE1	FMODE0	FTH4	FTH3	FTH2	FTH1	FTH0

Table 83. FIFO_CTRL register description

FMODE [2:0]	FIFO mode selection bits. Default value: 000 For further details refer to *Table 84*.
FTH [4:0]	FIFO threshold level setting. Default value: 0 0000

Table 84. FIFO mode selection

FMODE2	FMODE1	FMODE0	Mode
0	0	0	Bypass mode. FIFO turned off
0	0	1	FIFO mode. Stops collecting data when FIFO is full.
0	1	0	Reserved
0	1	1	Continuous mode until trigger is deasserted, then FIFO mode.
1	0	0	Bypass mode until trigger is deasserted, then Continuous mode.
1	1	0	Continuous mode. If the FIFO is full, the new sample over-writes the older sample.

7.35 FIFO_SRC (2Fh)

FIFO status control register.

Table 85. FIFO_SRC register

FTH	OVRN	FSS5	FSS4	FSS3	FSS2	FSS1	FSS0

Table 86. FIFO_SRC register description

FTH	FIFO threshold status. (0: FIFO filling is lower than threshold level; 1: FIFO filling is equal or higher than threshold level
OVRN	FIFO overrun status. (0: FIFO is not completely filled; 1: FIFO is completely filled and at least one samples has been overwritten) For further details refer to *Table 87*.
FSS [5:0]	Number of unread samples stored into FIFO. (000000: FIFO empty; 100000: FIFO full, 32 unread samples) For further details refer to *Table 87*.

Table 87. FIFO_SRC example: OVR/FSS details

FTH	OVRN	FSS5	FSS4	FSS3	FSS2	FSS1	FSS0	Description
0	0	0	0	0	0	0	0	FIFO empty
--(1)	0	0	0	0	0	0	1	1 unread sample
...								
--(1)	0	1	0	0	0	0	0	32 unread samples
1	1	1	0	0	0	0	0	At least one sample has been overwritten

1. When the number of unread samples in FIFO is greater than the threshold level set in register *FIFO_CTRL (2Eh)*, FTH value is '1'.

7.36 INT_GEN_CFG_G (30h)

Angular rate sensor interrupt generator configuration register.

Table 88. INT_GEN_CFG_G register

AOI_G	LIR_G	ZHIE_G	ZLIE_G	YHIE_G	YLIE_G	XHIE_G	XLIE_G

Table 89. INT_GEN_CFG_G register description

AOI_G	AND/OR combination of gyroscope's interrupt events. Default value: 0 (0: OR combination; 1: AND combination)
LIR_G	Latch Gyroscope interrupt request. Default value: 0. (0: interrupt request not latched; 1: interrupt request latched)
ZHIE_G	Enable interrupt generation on gyroscope's yaw (Z) axis high event. Default value: 0 (0: disable interrupt request; 1: interrupt request on measured angular rate value higher than preset threshold)
ZLIE_G	Enable interrupt generation on gyroscope's yaw (Z) axis low event. Default value: 0 (0: disable interrupt request; 1: interrupt request on measured angular rate value lowerthan preset threshold)
YHIE_G	Enable interrupt generation on gyroscope's roll (Y) axis high event. Default value: 0 (0: disable interrupt request; 1: interrupt request on measured angular rate value higher than preset threshold)
YLIE_G	Enable interrupt generation on gyroscope's roll (Y) axis low event. Default value: 0 (0: disable interrupt request; 1: interrupt request on measured angular rate value lower than preset threshold)
XHIE_G	Enable interrupt generation on gyroscope's pitch (X) axis high event. Default value: 0 (0: disable interrupt request; 1: interrupt request on measured angular rate value higher than preset threshold)
XLIE_G	Enable interrupt generation on gyroscope's pitch (X) axis low event. Default value: 0. (0: disable interrupt request; 1: interrupt request on measured angular rate value lower than preset threshold)

7.37 INT_GEN_THS_X_G (31h - 32h)

Angular rate sensor interrupt generator threshold registers. The value is expressed as a 15-bit word in two's complement.

Table 90. INT_GEN_THS_XH_G register

DCRM_G	THS_G_X14	THS_G_X13	THS_G_X12	THS_G_X11	THS_G_X10	THS_G_X9	THS_G_X8

Table 91. INT_GEN_THS_XL_G register

THS_G_X7	THS_G_X6	THS_G_X5	THS_G_X4	THS_G_X3	THS_G_X2	THS_G_X1	THS_G_X0

Table 92. INT_GEN_THS_X_G register description

DCRM_G	Decrement or reset counter mode selection. Default value: 0 (0: Reset; 1: Decrement, as per counter behavior in *Figure 29* and *Figure 30*)
THS_G_X [14:0]	Angular rate sensor interrupt threshold on pitch (X) axis. Default value: 0000000 00000000

7.38 INT_GEN_THS_Y_G (33h - 34h)

Angular rate sensor interrupt generator threshold registers. The value is expressed as a 15-bit word in two's complement.

Table 93. INT_GEN_THS_YH_G register

0(1)	THS_G_Y14	THS_G_Y13	THS_G_Y12	THS_G_Y11	THS_G_Y10	THS_G_Y9	THS_G_Y8

1. This bit must be set to '0' for the correct operation of the device.

Table 94. INT_GEN_THS_YL_G register

THS_G_Y7	THS_G_Y6	THS_G_Y5	THS_G_Y4	THS_G_Y3	THS_G_Y2	THS_G_Y1	THS_G_Y0

Table 95. INT_GEN_THS_Y_G register description

THS_G_Y [14:0]	Angular rate sensor interrupt threshold on roll (Y) axis. Default value: 0000000 00000000.

7.39 INT_GEN_THS_Z_G (35h - 36h)

Angular rate sensor interrupt generator threshold registers. The value is expressed as a 15-bit word in two's complement.

Table 96. INT_GEN_THS_ZH_G register

0(1)	THS_G_Z14	THS_G_Z13	THS_G_Z12	THS_G_Z11	THS_G_Z10	THS_G_Z9	THS_G_Z8

1. This bit must be set to '0' for the correct operation of the device.

Table 97. INT_GEN_THS_ZL_G register

THS_G_Z7	THS_G_Z6	THS_G_Z5	THS_G_Z4	THS_G_Z3	THS_G_Z2	THS_G_Z1	THS_G_Z0

Table 98. INT_GEN_THS_Z_G register description

THS_G_Z [14:0]	Angular rate sensor interrupt thresholds on yaw (Z) axis. Default value: 0000000 00000000.

7.40 INT_GEN_DUR_G (37h)

Angular rate sensor interrupt generator duration register.

Table 99. INT_GEN_DUR_G register

WAIT_G	DUR_G6	DUR_G5	DUR_G4	DUR_G3	DUR_G2	DUR_G1	DUR_G0

Table 100. INT_GEN_DUR_G register description

WAIT_G	Exit from interrupt wait function enable. Default value: 0 (0: wait function off; 1: wait for DUR_G [6:0] samples before exiting interrupt)
DUR_G [6:0]	Enter/exit interrupt duration value. Default Value: 000 0000

The **DUR_G [6:0]** bits set the minimum duration of the interrupt event to be recognized. Duration steps and maximum values depend on the ODR chosen.

The **WAIT_G** bit has the following meaning:

'0': the interrupt falls immediately if the signal crosses the selected threshold

'1': if the signal crosses the selected threshold, the interrupt falls after a number of samples equal to the value of the duration counter register.

For further details refer to *Figure 29* and *Figure 30*.

Figure 29. Wait bit disabled

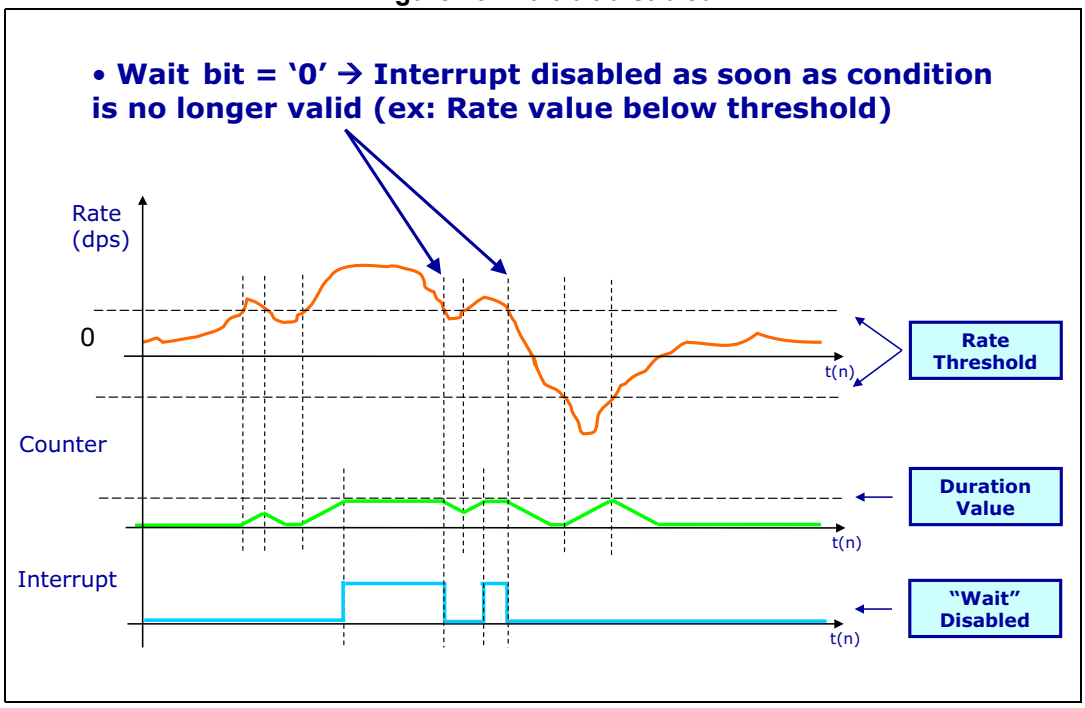

Figure 30. Wait bit enabled

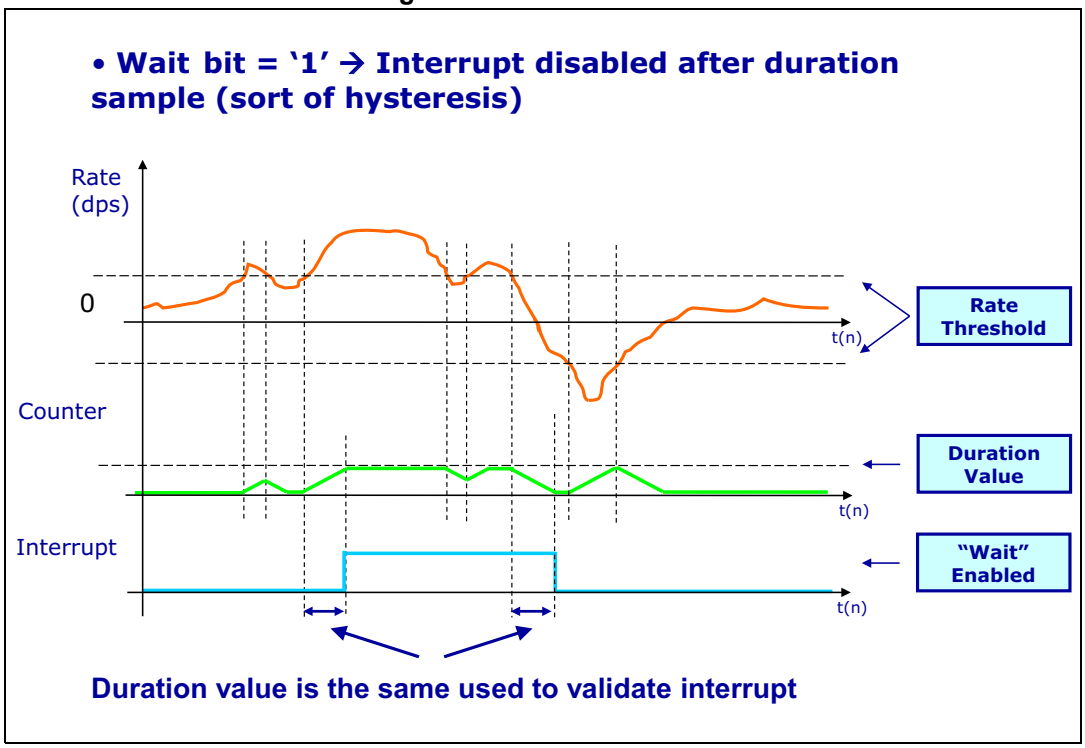

8 Magnetometer register description

8.1 OFFSET_X_REG_L_M (05h), OFFSET_X_REG_H_M (06h)

This register is a 16-bit register and represents the X offset used to compensate environmental effects (data is expressed as two's complement). This value acts on the magnetic output data value in order to subtract the environmental offset.

Default value: 0

Table 101. OFFSET_X_REG_L_M register

OFXM7	OFXM6	OFXM5	OFXM4	OFXM3	OFXM2	OFXM1	OFXM0

Table 102. OFFSET_X_REG_H_M register

OFXM15	OFXM14	OFXM13	OFXM12	OFXM11	OFXM10	OFXM9	OFXM8

8.2 OFFSET_Y_REG_L_M (07h), OFFSET_Y_REG_H_M (08h)

This register is a 16-bit register and represents the Y offset used to compensate environmental effects (data is expressed as two's complement). This value acts on the magnetic output data value in order to subtract the environmental offset.

Default value: 0

Table 103. OFFSET_Y_REG_L_M register

OFYM7	OFYM6	OFYM5	OFYM4	OFYM3	OFYM2	OFYM1	OFYM0

Table 104. OFFSET_Y_REG_H_M register

OFYM15	OFYM14	OFYM13	OFYM12	OFYM11	OFYM10	OFYM9	OFYM8

8.3 OFFSET_Z_REG_L_M (09h), OFFSET_Z_REG_H_M (0Ah)

This register is a 16-bit register and represents the Z offset used to compensate environmental effects (data is expressed as two's complement). This value acts on the magnetic output data value in order to subtract the environmental offset.

Default value: 0.

Table 105. OFFSET_Z_REG_L_M register

OFZM7	OFZM6	OFZM5	OFZM4	OFZM3	OFZM2	OFZM1	OFZM0

Table 106. OFFSET_Z_REG_H_M register

OFZM15	OFZM14	OFZM13	OFZM12	OFZM11	OFZM10	OFZM9	OFZM8

8.4 WHO_AM_I_M (0Fh)

Device identification register.

Table 107. WHO_AM_I_M register

0	0	1	1	1	1	0	1

8.5 CTRL_REG1_M (20h)

Table 108. CTRL_REG1_M register

TEMP_ COMP	OM1	OM0	DO2	DO1	DO0	FAST_ODR	ST

Table 109. CTRL_REG1_M register description

TEMP_COMP	Temperature compensation enable. Default value: 0 (0: temperature compensation disabled; 1: temperature compensation enabled)
OM[1:0]	X and Y axes operative mode selection. Default value: 00 (Refer to *Table 110*)
DO[2:0]	Output data rate selection. Default value: 100 (Refer to *Table 111*)
FAST_ODR	FAST_ODR enables data rates higher than 80 Hz. Default value: 0 (0: Fast_ODR disabled; 1: FAST_ODR enabled)
ST	Self-test enable. Default value: 0 (0: self-test disabled; 1: self-test enabled)

Table 110. X and Y axes operative mode selection

OM1	OM0	Operative mode for X and Y axes
0	0	Low-power mode
0	1	Medium-performance mode
1	0	High-performance mode
1	1	Ultra-high performance mode

Table 111. Output data rate configuration

DO2	DO1	DO0	ODR [Hz]
0	0	0	0.625
0	0	1	1.25
0	1	0	2.5
0	1	1	5
1	0	0	10
1	0	1	20
1	1	0	40
1	1	1	80

8.6 CTRL_REG2_M (21h)

Table 112. CTRL_REG2_M register

0(1)	FS1	FS0	0(1)	REBOOT	SOFT_RST	0(1)	0(1)

1. These bits must be set to '0' for the correct operation of the device.

Table 113. CTRL_REG2_M register description

FS[1:0]	Full-scale configuration. Default value: 00 Refer to *Table 114*
REBOOT	Reboot memory content. Default value: 0 (0: normal mode; 1: reboot memory content)
SOFT_RST	Configuration registers and user register reset function. (0: default value; 1: reset operation)

Table 114. Full-scale selection

FS1	FS0	Full scale
0	0	± 4 gauss
0	1	± 8 gauss
1	0	± 12 gauss
1	1	± 16 gauss

8.7 CTRL_REG3_M (22h)

Table 115. CTRL_REG3_M register

I2C_ DISABLE	0(1)	LP	0(1)	0(1)	SIM	MD1	MD0

1. These bits must be set to '0' for the correct operation of the device.

Table 116. CTRL_REG3_M register description

I2C_DISABLE	Disable I^2C interface. Default value 0. (0: I^2C enable; 1: I^2C disable)
LP	Low-power mode configuration. Default value: 0 If this bit is '1', the DO[2:0] is set to 0.625 Hz and the system performs, for each channel, the minimum number of averages. Once the bit is set to '0', the magnetic data rate is configured by the DO bits in the *CTRL_REG1_M (20h)* register.
SIM	SPI Serial Interface mode selection. Default value: 0 (0: SPI only write operations enabled; 1: SPI read and write operations enable).
MD[1:0]	Operating mode selection. Default value: 11 Refer to *Table 117.*

Table 117. System operating mode selection

MD1	MD0	Mode
0	0	Continuous-conversion mode
0	1	Single-conversion mode
1	0	Power-down mode
1	1	Power-down mode

8.8 CTRL_REG4_M (23h)

Table 118. CTRL_REG4_M register

0(1)	0(1)	0(1)	0(1)	OMZ1	OMZ0	BLE	0(1)

1. These bits must be set to '0' for the correct operation of the device

Table 119. CTRL_REG4_M register description

OMZ[1:0]	Z-axis operative mode selection. Default value: 00. Refer to *Table 120.*
BLE	Big/Little Endian data selection. Default value: 0 (0: data LSb at lower address; 1: data MSb at lower address)

Table 120. Z-axis operative mode selection

OMZ1	OMZ0	Operative mode for Z-axis
0	0	Low-power mode
0	1	Medium-performance mode
1	0	High-performance mode
1	1	Ultra-high performance mode

8.9 CTRL_REG5_M (24h)

Table 121. CTRL_REG5_M register

FAST_READ	BDU	0(1)	0(1)	0(1)	0(1)	0(1)	0(1)

1. These bits must be set to '0' for the correct operation of the device.

Table 122. CTRL_REG5_M register description

FAST_READ	FAST_READ allows reading the high part of DATA OUT only in order to increase reading efficiency. Default value: 0 (0: FAST_READ disabled; 1: FAST_READ enabled)
BDU	Block data update for magnetic data. Default value: 0 (0: continuous update; 1: output registers not updated until MSB and LSB have been read)

8.10 STATUS_REG_M (27h)

Table 123. STATUS_REG_M register

ZYXOR	ZOR	YOR	XOR	ZYXDA	ZDA	YDA	XDA

Table 124. STATUS_REG_M register description

ZYXOR	X, Y and Z-axis data overrun. Default value: 0 (0: no overrun has occurred; 1: a new set of data has overwritten the previous set)
ZOR	Z-axis data overrun. Default value: 0 (0: no overrun has occurred; 1: new data for the Z-axis has overwritten the previous data)
YOR	Y-axis data overrun. Default value: 0 (0: no overrun has occurred; 1: new data for the Y-axis has overwritten the previous data)
XOR	X-axis data overrun. Default value: 0 (0: no overrun has occurred; 1: new data for the X-axis has overwritten the previous data)
ZYXDA	X, Y and Z-axis new data available. Default value: 0 (0: a new set of data is not yet available; 1: a new set of data is available)
ZDA	Z-axis new data available. Default value: 0 (0: new data for the Z-axis is not yet available; 1: new data for the Z-axis is available)
YDA	Y-axis new data available. Default value: 0 (0: new data for the Y-axis is not yet available; 1: new data for the Y-axis is available)
XDA	X-axis new data available. Default value: 0 (0: a new data for the X-axis is not yet available; 1: a new data for the X-axis is available)

8.11 OUT_X_L_M (28h), OUT_X_H_M(29h)

Magnetometer X-axis data output. The value of the magnetic field is expressed as two’s complement.

8.12 OUT_Y_L_M (2Ah), OUT_Y_H_M (2Bh)

Magnetometer Y-axis data output. The value of the magnetic field is expressed as two’s complement.

8.13 OUT_Z_L_M (2Ch), OUT_Z_H_M (2Dh)

Magnetometer Z-axis data output. The value of the magnetic field is expressed as two’s complement.

8.14 INT_CFG_M (30h)

Table 125. INT_CFG_M register

XIEN	YIEN	ZIEN	0(1)	0(1)	IEA	IEL	IEN

1. This bit must be set to '0' for the correct operation of the device.

Table 126. INT_CFG_M register description

XIEN	Enable interrupt generation on X-axis. Default value: 0 0: disable interrupt request; 1: enable interrupt request
YIEN	Enable interrupt generation on Y-axis. Default value: 0 0: disable interrupt request; 1: enable interrupt request
ZIEN	Enable interrupt generation on Z-axis. Default value: 0 0: disable interrupt request; 1: enable interrupt request
IEA	Interrupt active configuration on INT_MAG. Default value: 0 0: low; 1: high
IEL	Latch interrupt request. Default value: 0 0: interrupt request latched; 1: interrupt request not latched) Once latched, the INT_M pin remains in the same state until *INT_SRC_M (31h)*) is read.
IEN	Interrupt enable on the INT_M pin. Default value: 0 0: disable; 1: enable

8.15 INT_SRC_M (31h)

Table 127. INT_SRC_M register

PTH_X	PTH_Y	PTH_Z	NTH_X	NTH_Y	NTH_Z	MROI(1)	INT

1. This functionality can be enabled only if the IEN bit in *INT_CFG_M (30h)* is enabled.

Table 128. INT_SRC_M register description

PTH_X	Value on X-axis exceeds the threshold on the positive side. Default value: 0
PTH_Y	Value on Y-axis exceeds the threshold on the positive side. Default value: 0
PTH_Z	Value on Z-axis exceeds the threshold on the positive side. Default value: 0
NTH_X	Value on X-axis exceeds the threshold on the negative side. Default value: 0
NTH_Y	Value on Y-axis exceeds the threshold on the negative side. Default value: 0
NTH_Z	Value on Z-axis exceeds the threshold on the negative side. Default value: 0
MROI	Internal measurement range overflow on magnetic value. Default value: 0
INT	This bit signals when the interrupt event occurs.

8.16 INT_THS_L(32h), INT_THS_H(33h)

Interrupt threshold. Default value: 0.

The value is expressed in 15-bit unsigned.

Even if the threshold is expressed in absolute value, the device detects both positive and negative thresholds.

Table 129. INT_THS_L_M register

THS7	THS6	THS5	THS4	THS3	THS2	THS1	THS0

Table 130. INT_THS_H_M register

0(1)	THS14	THS13	THS12	THS11	THS10	THS9	THS8

1. This bit must be set to ‘0’ for the correct operation of the device.

9 Package information

In order to meet environmental requirements, ST offers these devices in different grades of ECOPACK® packages, depending on their level of environmental compliance. ECOPACK® specifications, grade definitions and product status are available at: *www.st.com*. ECOPACK is an ST trademark.

9.1 Soldering information

The LGA package is compliant with the ECOPACK®, RoHS and “Green” standard. It is qualified for soldering heat resistance according to JEDEC J-STD-020.

Leave “Pin 1 Indicator” unconnected during soldering.

Land pattern and soldering recommendations are available at www.st.com/mems.

9.2 LGA package information

Figure 31. LGA (3.5x3x1 mm) 24-lead package outline

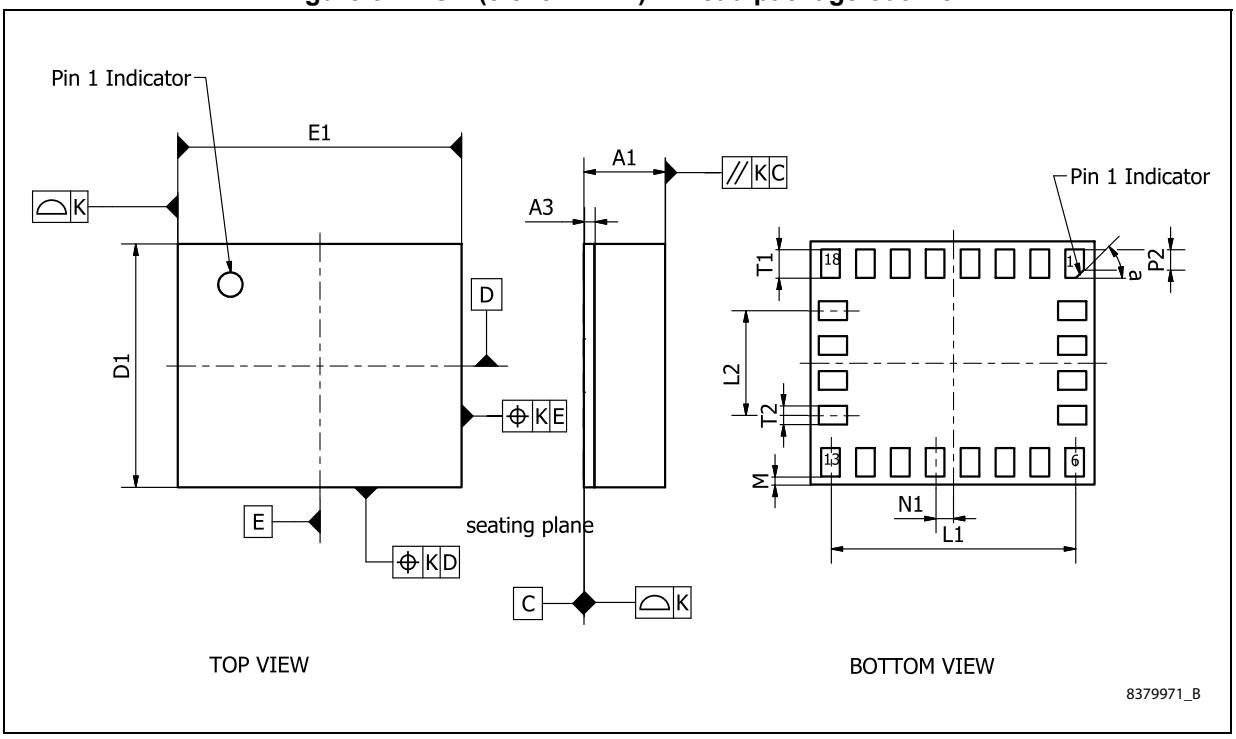

Table 131. LGA (3.5x3x1 mm) 24-lead package mechanical data

Dim.	mm		
	Min.	Typ.	Max.
A1		1.000	1.027
A3		0.130	
D1	2.850	3.000	3.150
E1	3.350	3.500	3.650
L1	2.960	3.010	3.060
L2	1.240	1.290	1.340
N1	0.165	0.215	0.265
P2	0.200	0.250	0.300
a		45°	
T1	0.300	0.350	0.400
T2	0.180	0.230	0.280
K		0.050	
M		0.100	

10 Revision history

Table 132. Document revision history

Date	Revision	Changes
18-Dec-2013	1	Initial release
05-Nov-2014	2	Datasheet status promoted from preliminary to production data Added ±16 *g* linear acceleration full scale throughout datasheet Corrected typo in footnote *3*, *4* and *5* of *Table 2: Pin description* Updated *Figure 15: LSM9DS1 electrical connections* and *Section 4.1: External capacitors* Updated *Table 117: System operating mode selection*
12-Mar-2015	3	Added FAST_ODR bit to *CTRL_REG1_M (20h)* Added FAST_READ bit to *CTRL_REG5_M (24h)*

IMPORTANT NOTICE – PLEASE READ CAREFULLY

STMicroelectronics NV and its subsidiaries (“ST”) reserve the right to make changes, corrections, enhancements, modifications, and improvements to ST products and/or to this document at any time without notice. Purchasers should obtain the latest relevant information on ST products before placing orders. ST products are sold pursuant to ST’s terms and conditions of sale in place at the time of order acknowledgement.

Purchasers are solely responsible for the choice, selection, and use of ST products and ST assumes no liability for application assistance or the design of Purchasers’ products.

No license, express or implied, to any intellectual property right is granted by ST herein.

Resale of ST products with provisions different from the information set forth herein shall void any warranty granted by ST for such product.

ST and the ST logo are trademarks of ST. All other product or service names are the property of their respective owners.

Information in this document supersedes and replaces information previously supplied in any prior versions of this document.

© 2015 STMicroelectronics – All rights reserved