LINEAR SYSTEMS

Linear Integrated Systems

IT130A IT130 IT131 IT132

MONOLITHIC DUAL PNP TRANSISTORS

FEATURES

Direct Replacement for Intersil IT130 Series
Pin for Pin Compatible

ABSOLUTE MAXIMUM RATINGS NOTE 1

(T_A = 25°C unless otherwise noted)

I_C	Collector Current	10mA

Maximum Temperatures	
Storage Temperature Range	-65°C to +200°C
Operating Junction Temperature	+150°C

Maximum Power Dissipation	**ONE SIDE**	**BOTH SIDES**
Device Dissipation @ Free Air	250mW	500mW
Linear Derating Factor	2.3mW/°C	4.3mW/°C

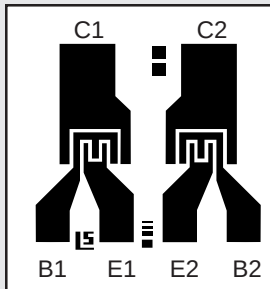

26 X 29 MILS

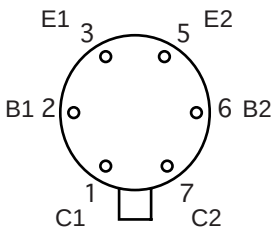

BOTTOM VIEW

ELECTRICAL CHARACTERISTICS T_A = 25°C (unless otherwise noted)

SYMBOL	CHARACTERISTICS	IT130A	IT130	IT131	IT132		UNITS	CONDITIONS
BV_{CBO}	Collector to Base Voltage	45	45	45	45	MIN.	V	I_C = 10µA I_E = 0
BV_{CEO}	Collector to Emitter Voltage	45	45	45	45	MIN.	V	I_C = 10µA I_B = 0
BV_{EBO}	Emitter-Base Breakdown Voltage	6.2	6.2	6.2	6.2	MIN.	V	I_E = 10µA I_C = 0 NOTE 2
BV_{CCO}	Collector to Collector Voltage	60	60	60	60	MIN.	V	I_C = 10µA I_E = 0
h_{FE}	DC Current Gain	200	200	80	80	MIN.		I_C = 10µA V_{CE} = 5V
		225	225	100	100	MIN.		I_C = 1.0mA V_{CE} = 5V
V_{CE}(SAT)	Collector Saturation Voltage	0.5	0.5	0.5	0.5	MAX.	V	I_C = 0.5mA I_B = 0.05mA
I_{EBO}	Emitter Cutoff Current	1	1	1	1	MAX.	nA	I_C = 0 V_{EB} = 3V
I_{CBO}	Collector Cutoff Current	1	1	1	1	MAX.	nA	I_E = 0 V_{CB} = 45V
C_{OBO}	Output Capacitance	2	2	2	2	MAX.	pF	I_E = 0 V_{CB} = 5V
C_{C1C2}	Collector to Collector Capacitance	4	4	4	4	MAX.	pF	V_{CC} = 0
I_{C1C2}	Collector to Collector Leakage Current	10	10	10	10	MAX.	nA	V_{CC} = ±60V
f_T	Current Gain Bandwidth Product	110	110	90	90	MIN.	MHz	I_C = 1mA V_{CE} = 5V
NF	Narrow Band Noise Figure	3	3	3	3	MAX.	dB	I_C = 100µA V_{CE} = 5V BW = 200Hz, R_G = 10 KΩ f=1KHz

Linear Integrated Systems 4042 Clipper Court, Fremont, CA 94538 • TEL: (510) 490-9160 • FAX: (510) 353-0261

MATCHING CHARACTERISTICS @ 25°C (unless otherwise noted)

SYMBOL	CHARACTERISTICS	IT130A	IT130	IT131	IT132		UNITS	CONDITIONS
$\|V_{BE1}-V_{BE2}\|$	Base Emitter Voltage Differential	1	2	3	5	MAX.	mV	I_C = 10 µA V_{CE} = 5V
$\Delta\|(V_{BE1}-V_{BE2})\|/\Delta T$	Base Emitter Voltage Differential Change with Temperature	3	5	10	20	MAX.	µV/°C	I_C = 10 µA V_{CE} = 5V T = -55°C to +125°C
$\|I_{B1}- I_{B2}\|$	Base Current Differential	2.5	5	25	25	MAX.	nA	I_C = 10 µA V_{CE} = 5V

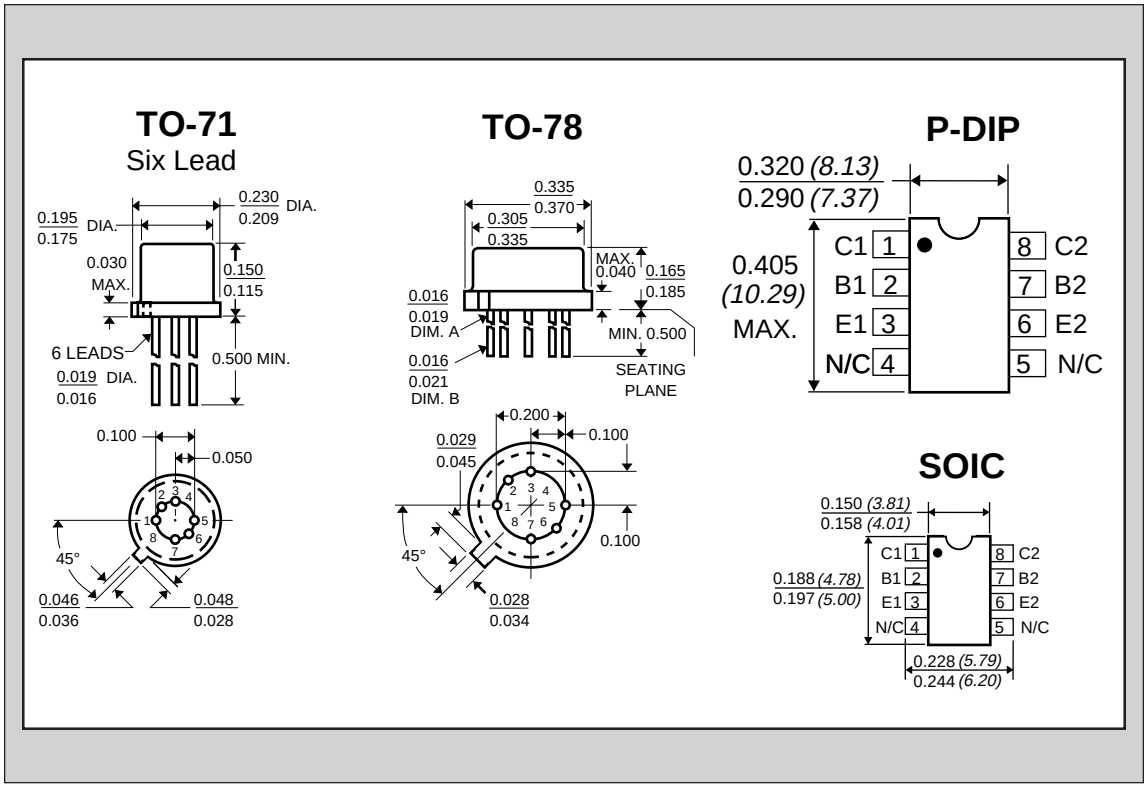

NOTES:

1. These ratings are limiting values above which the serviceability of any semiconductor may be impaired.
2. The reverse base-to-emitter voltage must never exceed 6.2 volts; the reverse base-to-emitter current must never exceed 10 µA.