Multi Line Sensor Heads for narrow-width scanners

LSH3004-AA10A

Equipped with the sensor chips that have built-in analog memory, this compact color multi line sensor head is suitable for any scanning applications that require rapid scanning of widths of up to A6. It best fits into the photo graphic applications.

●Applications

Check readers, card scanners, and a variety of other image input devices.

●Features

1) By integrating the signal amplifier on the sensor chip, external noise is shut out. Additionally, newly developed analog memory circuit and realizes high speed scanning.
2) The LED light source is mounted on the same substrate as the sensor chip which makes it possible to package the device with lighter weight and an extremely small size.
3) With the proprietary prism(reflectors), the output signal is maintained uniformly.
4) The ceramic substrate is used for excellent dimensional accuracy and thermal stability. Variation and maximize the image re-productivity.

●Dimensions (Unit : mm)

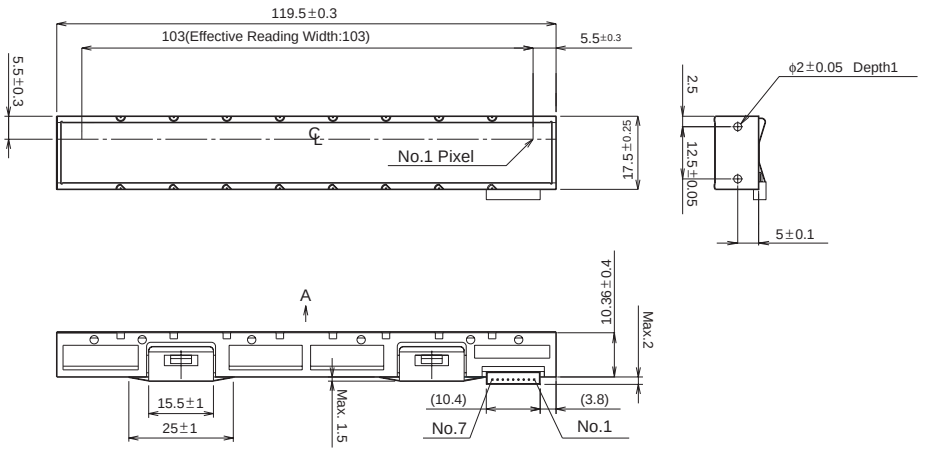

Note) Deflection at the top of glass : 0 to 0.25
Projection to platen is positive
Socket Housing : IL-Z-7S-S125C3(JAE)
Socket Contact : IL-Z-C3-A-15000(JAE)

Pin No.	Signal	Pin No.	Signal
No.1	Ao	No.6	GLED
No.2	GND	No.7	VLED
No.3	SI		
No.4	CLK		
No.5	V_{DD}		

© 2009 ROHM Co., Ltd. All rights reserved.

●Characteristics

Parameter	Symbol	Typ.	Unit
Effective scanning width	–	103	mm
Primary scan dot density	–	300	dpi
Total dot number	–	1216	dots
Power supply voltage	V_{DD}	5	V
Scanning speed	SLT	0.5	ms / line
Clock frequency	CLK	2.5	MHz
Maximum dynamic range	VRMax.	0.5	V
Minimum dynamic range	VRMin.	0.25	V
Dark output	Vod	1.0±0.4	V
Operating temperature	–	5 to 45	°C

●Pin assignments

No.	Circuit	I / O	Functions
1	Ao	O	Analog output
2	GND	I	Ground
3	SI	I	Serial-in
4	CLK	I	Clock
5	V_{DD}	I	Power supply
6	G-LED	I	LED ground
7	V-LED	I	LED power supply

●Timing chart

(a) CLK Timing Chart

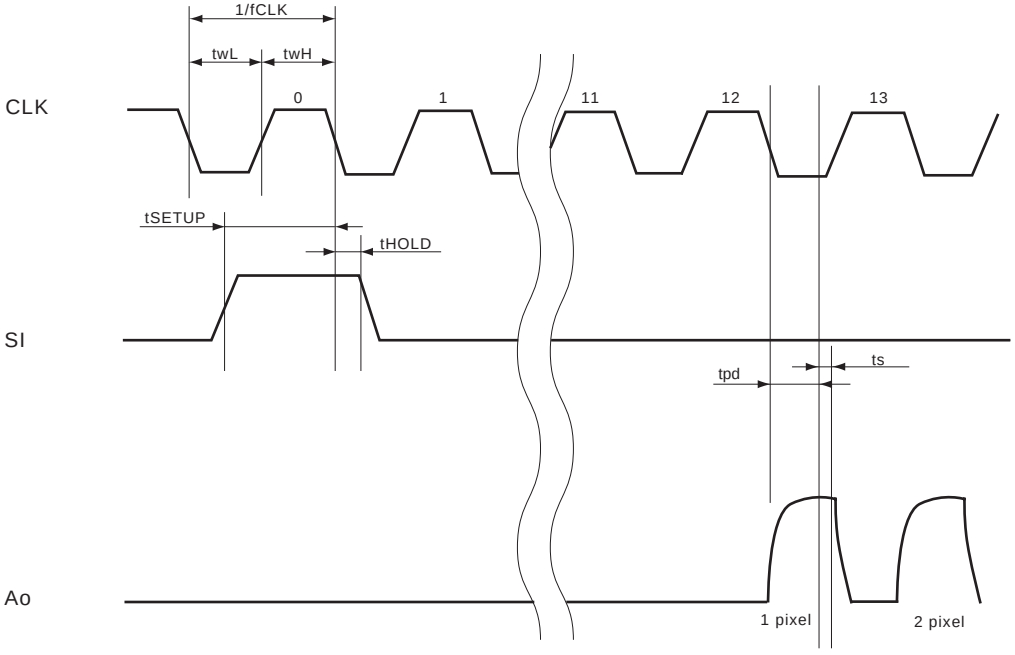

Fig.1

© 2009 ROHM Co., Ltd. All rights reserved.

(b) Data Output Timing Chart

After turning on the SI pulse, the analog output shape starts from the setting up point of 12 clock pulse.

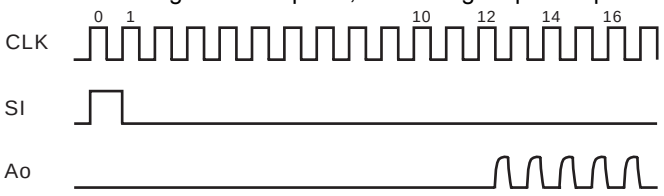

Note) Output blank part cannot be used as tha analog output standard level.

●Inner circuit

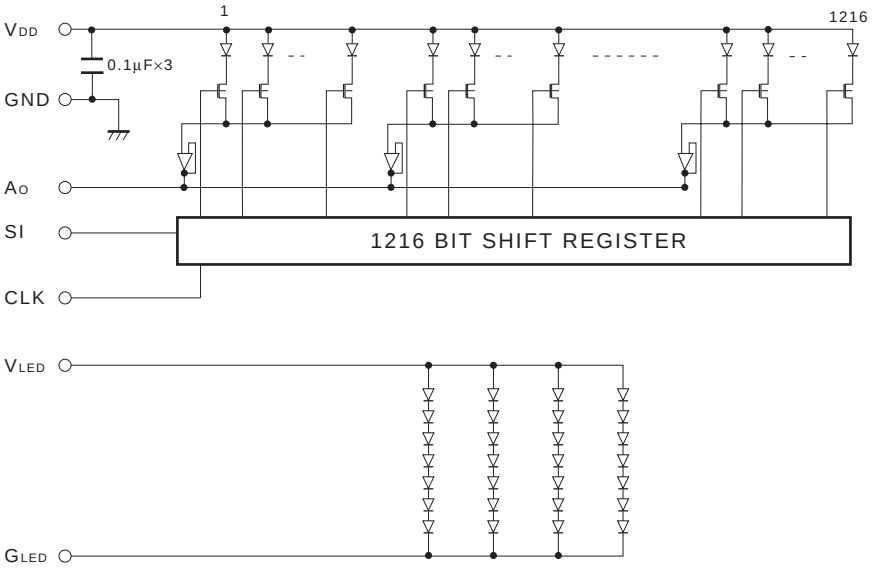

Fig.2

© 2009 ROHM Co., Ltd. All rights reserved.

Notes

No copying or reproduction of this document, in part or in whole, is permitted without the consent of ROHM Co.,Ltd.

The content specified herein is subject to change for improvement without notice.

The content specified herein is for the purpose of introducing ROHM's products (hereinafter "Products"). If you wish to use any such Product, please be sure to refer to the specifications, which can be obtained from ROHM upon request.

Examples of application circuits, circuit constants and any other information contained herein illustrate the standard usage and operations of the Products. The peripheral conditions must be taken into account when designing circuits for mass production.

Great care was taken in ensuring the accuracy of the information specified in this document. However, should you incur any damage arising from any inaccuracy or misprint of such information, ROHM shall bear no responsibility for such damage.

The technical information specified herein is intended only to show the typical functions of and examples of application circuits for the Products. ROHM does not grant you, explicitly or implicitly, any license to use or exercise intellectual property or other rights held by ROHM and other parties. ROHM shall bear no responsibility whatsoever for any dispute arising from the use of such technical information.

The Products specified in this document are intended to be used with general-use electronic equipment or devices (such as audio visual equipment, office-automation equipment, communication devices, electronic appliances and amusement devices).

The Products specified in this document are not designed to be radiation tolerant.

While ROHM always makes efforts to enhance the quality and reliability of its Products, a Product may fail or malfunction for a variety of reasons.

Please be sure to implement in your equipment using the Products safety measures to guard against the possibility of physical injury, fire or any other damage caused in the event of the failure of any Product, such as derating, redundancy, fire control and fail-safe designs. ROHM shall bear no responsibility whatsoever for your use of any Product outside of the prescribed scope or not in accordance with the instruction manual.

The Products are not designed or manufactured to be used with any equipment, device or system which requires an extremely high level of reliability the failure or malfunction of which may result in a direct threat to human life or create a risk of human injury (such as a medical instrument, transportation equipment, aerospace machinery, nuclear-reactor controller, fuel-controller or other safety device). ROHM shall bear no responsibility in any way for use of any of the Products for the above special purposes. If a Product is intended to be used for any such special purpose, please contact a ROHM sales representative before purchasing.

If you intend to export or ship overseas any Product or technology specified herein that may be controlled under the Foreign Exchange and the Foreign Trade Law, you will be required to obtain a license or permit under the Law.

ROHM SEMICONDUCTOR

Thank you for your accessing to ROHM product informations.
More detail product informations and catalogs are available, please contact us.

ROHM Customer Support System

http://www.rohm.com/contact/

© 2009 ROHM Co., Ltd. All rights reserved.