LSI/CSI

LSI Computer Systems, Inc. 1235 Walt Whitman Road, Melville, NY 11747 (631) 271-0400 FAX (631) 271-0405

LS7634 LS7635 LS7634FO LS7635FO

October 2008

TOUCH CONTROL HALOGEN LAMP DIMMER

FEATURES:

- Touch or pushbutton control of high-voltage lamps and *transformer-coupled low-voltage halogen lamps
- ***Magnetic Transformers and most Electronic Transformers**
- Automatic Safety Shutdown
- Three operating modes
- Extension input for remote activation
- 50Hz/60Hz AC line frequency
- +5V Power Supply (V_{DD} -V_{SS})
- LS7634, LS7635 (DIP); LS7634-S, LS7635-S (SOIC); LS7634FO, LS7635FO (DIP); LS7634FO-S, LS7635FO-S (SOIC)
  - See Figure 1 -

PIN ASSIGNMENT - TOP VIEW

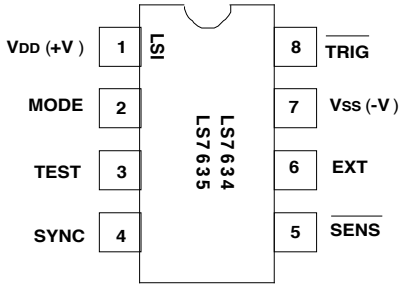

FIGURE 1

APPLICATIONS:

Electronic dimmers for wall switch control of ceiling mounted lighting, foot switch control of large floor lamps and hand switch control of table lamps.

BACKGROUND AND GENERAL DESCRIPTION:

A typical electronic dimmer may not operate properly with the inductive load encountered when driving a transformer-coupled low-voltage halogen lamp. The inductive load can cause a phenomenon called half-waving, wherein the triac fires in alternate half-cycles only, which may lead to the thermal destruction of the load transformer. The problems encountered in driving an inductive load are addressed by the LS7634/LS7635 family of CMOS ICs as follows:

1. Delayed triac cut-off.

When a trigger pulse is due to occur at a conduction angle which coincides with the on-state of the triac, the trigger pulse is delayed until the triac has turned off. This eliminates the underlying cause of half-waving.

2. Delayed triac turn-on and safety shutdown

With inductive loads, the holding current needed to maintain the triac On-State, may seriously lag behind the gate trigger signal causing the triac to turn off prematurely. If the frequency of occurrences of the delayed turn-on exceeds a preset threshold, a shutdown is initiated by turning off the triac trigger pulses. The safety-shutdown threshold value is accumulated in a 4-bit Up/Down counter. The count increments for every occurrence of delayed turn-on and decrements once every 8 SYNC pulses (AC line cycles). The counter will not decrement below zero. If the count reaches 15, the safety-shut-down is effected.

INPUT/OUTPUT DESCRIPTION:

V_{DD} (Pin 1) Supply voltage positive terminal.

Vss (Pin 7) Supply voltage negative terminal.

MODE (Pin 2) - See Table 1
All variations of LS7634 and LS7635 can operate in 3 different modes. The 3-state MODE input selects the operating modes: Vss = Mode 0; Float = Mode 1; V_{DD} = Mode 2

SYNC (Pin 4) - See Figure 6
The AC line frequency is applied to this input. All internal timings are synchronized to the AC. The Load On/Off status information is also derived from this input.

$\overline{\text{SENS}}$ (Pin 5) - See Table 1
A Logic 0 applied to this input alters the $\overline{\text{TRIG}}$ output either by turning it on, turning it off or by changing its conduction angle. Specifically which action takes place is dependent on the type of activation of the $\overline{\text{SENS}}$ input, namely SHORT or LONG touch and the prior state of $\overline{\text{TRIG}}$ output.

EXT (Pin 6)
Same functionality as the $\overline{\text{SENS}}$ input, except that a Logic 1 is the active level at this input. EXT input is intended to be operated from a remote site with long cable connection, when noise can be expected. The sampling method used at this input makes it less sensitive to noise.

$\overline{\text{TRIG}}$ (Pin 8)
The $\overline{\text{TRIG}}$ output is a low level pulse occurring once every half-cycle of the AC and is intended to drive the gate of a triac in series with the load. The conduction angle, ø, of the $\overline{\text{TRIG}}$ pulse can be varied by means of LONG and SHORT touches at either the $\overline{\text{SENS}}$ or the EXT input.

Test (Pin 3)
For factory use only.

The differences among all versions of LS7634 and LS7635 are:

LS7634 (LS7634FO)
Upon power-up, the $\overline{TRIG}$ output is Off.
(Upon power-up, the $\overline{TRIG}$ output is On at maximum conduction angle.)
When a LONG touch is applied, the dimming direction automatically reverses whenever maximum or minimum conduction angles are reached.

LS7635 (LS7635FO)
Upon power-up, the $\overline{TRIG}$ output is Off.
(Upon power-up, the $\overline{TRIG}$ output is On at maximum conduction angle.)
When a LONG touch is applied, the dimming stops whenever maximum or minimum conduction angles are reached. In order to change dimming levels from maximum or minimum, LONG touch must be removed and reapplied.The purpose of this feature is to allow the user to positively locate maximum and minimum conduction angles.

LS7635 NOTE:
If the User applies a LONG Touch when the $\overline{TRIG}$ Conduction Angle is within a "few" degrees of Maximum or Minimum, the $\overline{TRIG}$ Conduction Angle can move to Maximum or Minimum and stop without the User being able to observe a change in brightness. There-fore, the User should be instructed that if no change in brightness is observed in response to a LONG Touch, the LONG Touch should be removed and reapplied in order to produce a change in brightness.

TABLE 1

MODE	SHORT TOUCH		LONG TOUCH		DIMMING REVERSAL (Note 5)
	PRE-TOUCH Ø	POST-TOUCH Ø	PRE-TOUCH Ø	POST-TOUCH Ø	
	OFF	MAX(Note 1)	OFF/MIN	Varies up from MIN	N/A
0	ON	OFF	MAX	Varies down from MAX	N/A
			INTERMEDIATE	Varies from INTERMEDIATE	NO
	OFF	MEMORY	OFF	Varies from memory (Notes 2, 3,4)	YES
1		(Notes 2, 3)	MIN	Varies up from MIN	N/A
	ON	OFF	MAX	Varies down from MAX	N/A
			INTERMEDIATE	Varies from INTERMEDIATE	YES
	OFF	MAX (Note 1)	OFF/MIN	Varies up from MIN	N/A
2	ON	OFF	MAX	Varies down from MAX	N/A
			INTERMEDIATE	Varies from INTERMEDIATE	YES

Note 1: A soft turn-on is produced by slewing up the conduction angle, ø, from minimum at the rate of 1.4°/8.33ms (60Hz).
Note 2: A soft turn-on is produced by slewing up ø, from minimum to memory.
Upon power-up the memory value is defaulted to maximum conduction angle.
Note 3: "Memory" refers to the conduction angle, ø, which existed prior to the current off-state.
Note 4: A soft turn-on is produced by slewing up ø from minimum to memory upon which the dimming is started.
Note 5: **NO** = Dimming direction does not reverse from prior dimming direction.
YES = Dimming direction does reverse from prior dimming direction. **N/A** = Does not apply.

ABSOLUTE MAXIMUM RATINGS:

PARAMETER	SYMBOL	VALUE	UNIT
DC supply voltage	V_{DD} - Vss	+7	V
Any input voltage	V_{IN}	Vss - 0.3 to V_{DD} + 0.3	V
Operating temperature	T_A	0 to +90	°C
Storage temperature	T_{STG}	-65 to +150	°C

DC ELECTRICAL CHARACTERISTICS:
(T_A = +25°C, all voltages referenced to Vss. V_{DD} = +5V unless otherwise noted.)

PARAMETER	SYMBOL	MIN	TYP	MAX	UNIT	CONDITION
Supply voltage	V_{DD}	4.5	5.0	5.5	V	-
Supply current	I_{DD}	-	300	400	µA	Output unloaded V_{DD} = 5.5V
SYNC Lo	V_{ISL}	-	-	2.1	V	-
SYNC Hi	V_{ISH}	2.9	-	-	V	-
EXT, $\overline{SENS}$ Lo	V_{IEL}	-	-	1.5	V	-
EXT, $\overline{SENS}$ Hi	V_{IEH}	3.5	-	-	V	-
$\overline{TRIG}$ Lo	V_{OL}	-	0.2	-	V	-
$\overline{TRIG}$ Hi	V_{OH}	-	5.0	-	V	-
$\overline{TRIG}$ Sink Current	I_{TSNK}	35	-	-	mA	V_{OTRIG} = 2.5V

TIMING CHARACTERISTICS (See Figures 2, 3 and 4)**:**

PARAMETER	SYMBOL	MIN	TYP	MAX	UNI T	CONDITION
SYNC Frequency	fs	40	-	70	Hz	-
SHORT Touch	T_{SI}	42	-	333	ms	60Hz
	T_{SI}	50	-	400	ms	50Hz
LONG Touch	T_{S2}	342	-	infinite	ms	60Hz
	T_{S2}	410	-	infinite	ms	50Hz
$\overline{\textbf{TRIG}}$ pulse width (see Note 5)	Tw	-	130	-	µs	60Hz
	Tw	-	156	-	µs	50Hz
Conduction Angle	ø	50	-	154	deg	-
ø incremental steps (Note 1)	Δø	-	1.4	-	deg	-
Soft-on slew rate	S_S	-	1.4	-	deg/8.33ms	60Hz
	S_S	-	1.4	-	deg/10ms	50Hz
A0 to A1/A2 to A0 slew rate (Note 2)	S_{AA}	-	1.4	-	deg/33.3ms	60Hz
	S_{AA}	-	1.4	-	deg/40ms	50Hz
A1 to B1/B2 to A2 slew rate (Note 3)	S_{BA}	-	1.4	-	deg/66.7ms	60Hz
	S_{BA}	-	1.4	-	deg/80ms	50Hz
B1 to B2 delay (Note 4)	T_{BD}	-	500	-	ms	60Hz
	T_{BD}	-	600	-	ms	50Hz

Note 1: Total number of steps = 77.
Note 2: Number of steps from A0 to A1, or A2 to A0 = 55.
Note 3: Number of steps from A1 to B1 or B2 to A2 = 21.
Note 4: ø is at minimum between B1 and B2. T_{BD} is applicable for LS7634 only.
For LS7635 when minimum ø is reached, dimming direction reverses only if the **LONG** Touch is terminated and reapplied.
Note 5: Tw = 488us (60Hz), 586us (50Hz) available. Contact factory for details.

FIGURE 2. $\overline{\textbf{TRIG}}$ OUTPUT CONDUCTION ANGLE, Ø

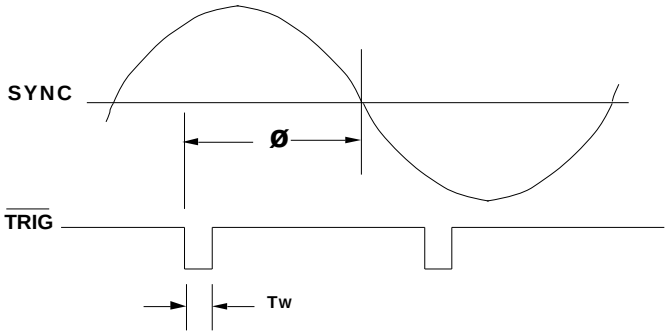

The information included herein is believed to be accurate and reliable. However, LSI Computer Systems, Inc. assumes no responsibilities for inaccuracies, nor for any infringements of patent rights of others which may result from its use.

FIGURE 3. LS7634 $\overline{\textbf{TRIG}}$, Ø vs TOUCH ($\overline{\textbf{SENS}}$ OR EXT)

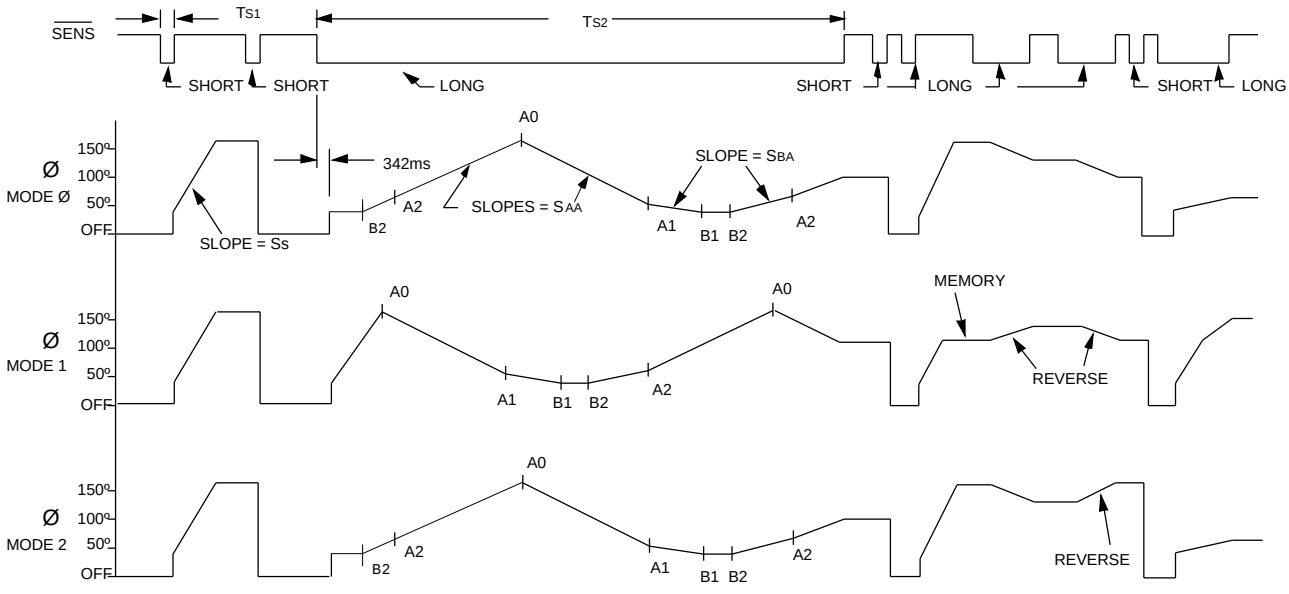

FIGURE 4. LS7635 $\overline{TRIG}$, Ø vs TOUCH ($\overline{SENS}$ OR EXT)

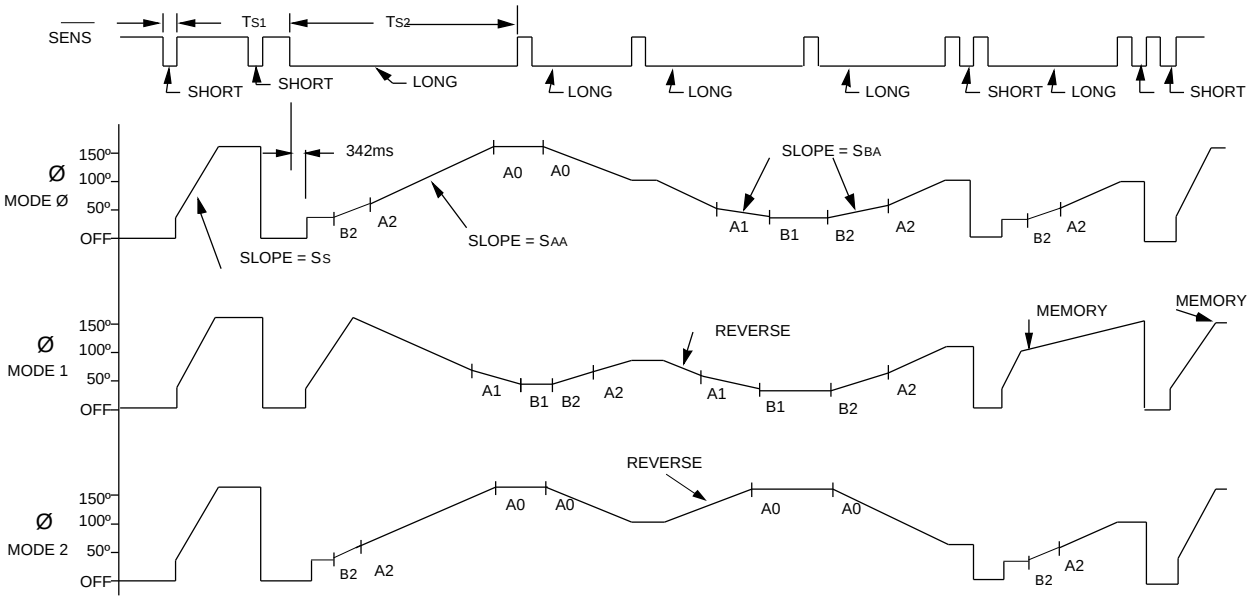

FIGURE 5. A Typical Halogen Lamp Dimmer Wall Switch

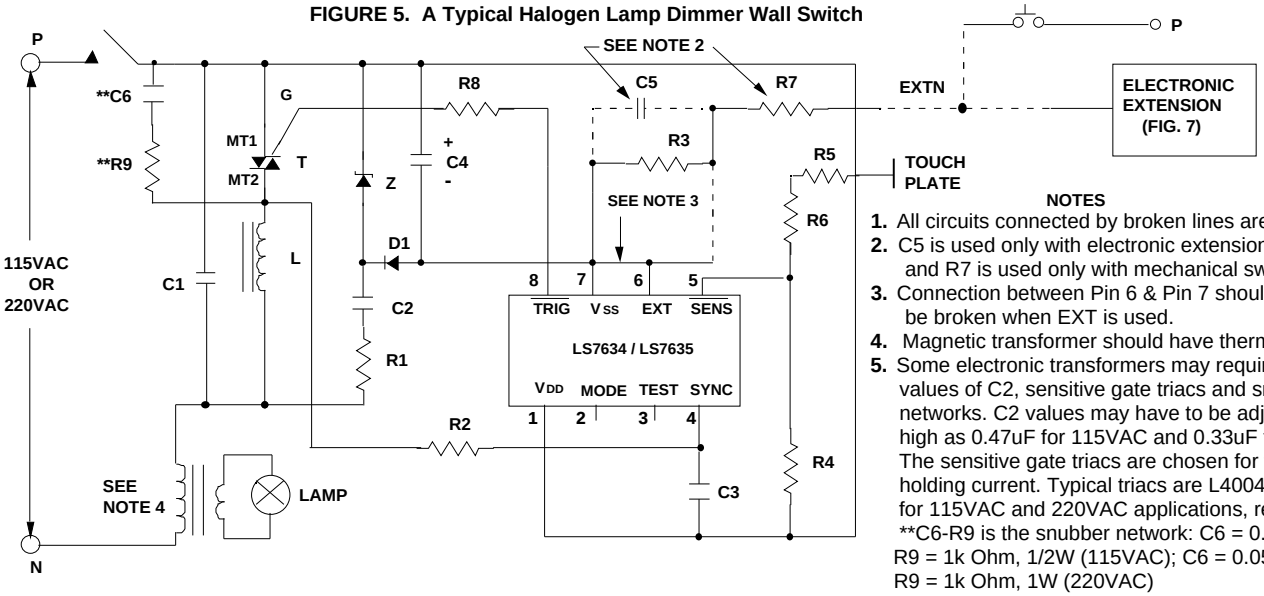

NOTES

1. All circuits connected by broken lines are optional.
2. C5 is used only with electronic extension and R7 is used only with mechanical switch.
3. Connection between Pin 6 & Pin 7 should be broken when EXT is used.
4. Magnetic transformer should have thermal protection.
5. Some electronic transformers may require larger values of C2, sensitive gate triacs and snubber networks. C2 values may have to be adjusted to be as high as 0.47uF for 115VAC and 0.33uF for 220VAC. The sensitive gate triacs are chosen for their low holding current. Typical triacs are L4004L6 and L6004L6 for 115VAC and 220VAC applications, respectively.

**C6-R9 is the snubber network: C6 = 0.1uF, 200V, R9 = 1k Ohm, 1/2W (115VAC); C6 = 0.05uF, 400V, R9 = 1k Ohm, 1W (220VAC)

C1 = 0.15µF, 200V
* C1 = 0.15µF, 400V
C2 = 0.22µF, 200V
* C2 = 0.15µF, 400V
C3 = 0.002µF, 10V
*Component change for 220VAC
**Snubber Network (See Note 5)

C4 = 100µF, 10V
C5 = 0.1µF, 10V
R1 = 270Ω, 1/2W
* R1 = 1kΩ, 1W
R2 = 680kΩ, 1/4W
* R2 = 1.5MΩ, 1/4W
R3 = 1.5MΩ, 1/4W

R4 = 1MΩ to 5MΩ, 1/4W (Select for Sensitivity)
R5, R6 = 2.7MΩ, 1/4W
* R5, R6 = 4.7MΩ, 1/4W
R7 = 150kΩ, 1/4W
R8 = 62Ω, 1/4W
D1 = 1N4148

Z = 5.6V, 1W (Zener)
T = Q4004L4 Typical Triac **(1)**
* T = Q5003L4 Typical Triac **(1)**
L = 100µH (RFI Filter)
* L = 200µH (RFI Filter)
(1) For loads greater than 6A, use an alternistor

FIGURE 6. ELECTRONIC EXTENSION

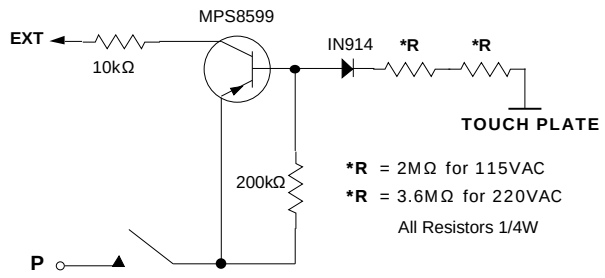

EXTENSIONS: All switching and dimming functions can be implemented by utilizing the EXT input. Use a pushbutton or the electronic switch in conjunction with a Touch Plate as shown in Figure 6. When the plate is touched, a logic high level is generated at the EXT input of the IC for both half-cycles of the line frequency. (See Figure 5)

APPLICATION EXAMPLE:

A typical implementation of the light dimmer circuit is shown in Fig. 5. Here the brightness of the lamp is set by touching the touch plate. The function of different components are as follows:

- The 5V DC supply for the chip is provided by Z, D1, R1, C2 and C4.
- R2 and C3 generate the filtered signal for the SYNC input AC phase synchronization.
- R3 and C5 act as a filter circuit for the electronic extension. If extensions are not used, the EXT input (Pin 6) should be tied to Vss (Pin 7).
- R4, R5 and R6 set up the sensitivity of the $\overline{SENS}$ input.
- R8 provides current limiting and isolation between the chip output and the triac gate.
- C1 and L are RFI filter circuits.