LINEAR SYSTEMS

Linear Integrated Systems

LS3954A LS3954 LS3955 LS3956 LS3958

LOW NOISE LOW DRIFT MONOLITHIC DUAL N-CHANNEL JFET

FEATURES	
LOW DRIFT	$\lvert\Delta V_{GS1-2}/\Delta T\rvert$= 5µV/°C max.
LOW LEAKAGE	I_G = 20pA TYP.
LOW NOISE	e_n= 10nV/√Hz TYP.

ABSOLUTE MAXIMUM RATINGS NOTE 1
@ 25°C (unless otherwise noted)

Maximum Temperatures	
Storage Temperature	-65° to +200°C
Operating Junction Temperature	+150°C

Maximum Voltage and Current for Each Transistor NOTE 1		
$-V_{GSS}$	Gate to Drain or Source Voltage	60V
$-V_{DSO}$	Drain to Source Voltage	60V
$-I_{G(f)}$	Gate Forward Current	50mA

Maximum Power Dissipation	
Device Dissipation @ Free Air - Total	400mW @ 25°C

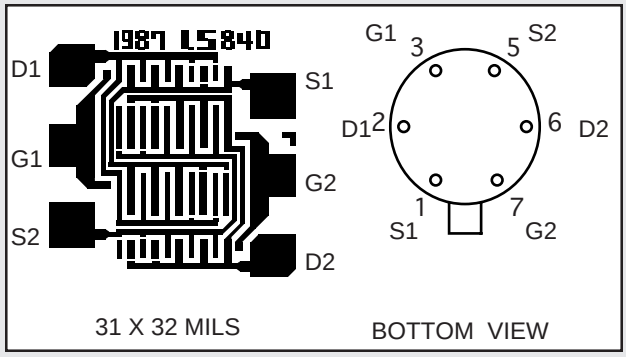

ELECTRICAL CHARACTERISTICS @ 25°C (unless otherwise noted)

SYMBOL	CHARACTERISTICS	LS3954A	LS3954	LS3955	LS3956	LS3958	UNITS	CONDITIONS
$\lvert\Delta V_{GS1-2}/\Delta T\rvert$ max.	Drift vs. Temperature	5	10	25	50	100	µV/°C	V_{DG}= 20V, I_D= 200µA T_A= -55°C to +125°C
$\lvert V_{GS1-2}\rvert$ max.	Offset Voltage	5	5	10	15	25	mV	V_{DG}= 20V, I_D= 200µA

SYMBOL	CHARACTERISTICS	MIN.	TYP.	MAX.	UNITS	CONDITIONS		
BV_{GSS}	Breakdown Voltage	60	--	--	V	V_{DS}= 0	I_D= 1µA	
BV_{GGO}	Gate-to-Gate Breakdown	60	--	--	V	I_G= 1nA	I_D= 0	I_S= 0
	TRANSCONDUCTANCE							
Y_{fss}	Full Conduction	1000	2000	3000	µmho	V_{DG}= 20V	V_{GS}= 0	f= 1kHz
Y_{fs}	Typical Operation	500	700	1000	µmho	V_{DG}= 20V	I_D= 200µA	
$\lvert Y_{fs1-2}/Y_{fs}\rvert$	Mismatch	--	0.6	3	%			
	DRAIN CURRENT							
I_{DSS}	Full Conduction	0.5	2	5	mA	V_{DG}= 20V	V_{GS}= 0	
$\lvert I_{DSS1-2}/I_{DSS}\rvert$	Mismatch at Full Conduction	--	1	5	%			
	GATE VOLTAGE							
V_{GS}(off) or V_P	Pinchoff Voltage	1	2	4.5	V	V_{DS}= 20V	I_D= 1nA	
V_{GS}	Operating Range	0.5	--	4	V	V_{DS}= 20V	I_D= 200µA	
	GATE CURRENT							
$-I_G$	Operating	--	20	50	pA	V_{DG}= 20V	I_D= 200µA	
$-I_G$	High Temperature	--	--	50	nA	V_{DG}= 20V	I_D= 200µA	T_A=+125°C
$-I_G$	Reduced V_{DG}	--	5	--	pA	V_{DG}= 10V	I_D= 200µA	
$-I_{GSS}$	At Full Conduction	--	--	100	pA	V_{DG}= 20V	V_{DS}= 0	

Linear Integrated Systems 4042 Clipper Court, Fremont, CA 94538 • TEL: (510) 490-9160 • FAX: (510) 353-0261

SYMBOL	CHARACTERISTICS	MIN.	TYP.	MAX.	UNITS	CONDITIONS
	OUTPUT CONDUCTANCE					
Y_{OSS}	Full Conduction	--	--	5	µmho	V_{DG}= 20V V_{GS}= 0
Y_{OS}	Operating	--	0.1	1	µmho	V_{DG}= 20V I_D= 200µA
$\|Y_{OS1-2}\|$	Differential	--	0.01	0.1	µmho	
	COMMON MODE REJECTION					
CMR	-20 log $\|\Delta V_{GS1-2}/\Delta V_{DS}\|$	--	100	--	dB	ΔV_{DS}= 10 to 20V I_D= 200µA
CMR	-20 log $\|\Delta V_{GS1-2}/\Delta V_{DS}\|$	--	75	--	dB	ΔV_{DS}= 5 to 10V I_D= 200µA
	NOISE					
NF	Figure	--	--	0.5	dB	V_{DS}= 20V V_{GS}= 0 R_G= 10MΩ f= 100Hz NBW= 6Hz
e_n	Voltage	--	--	15	nV/√Hz	V_{DS}= 20V I_D= 200µA f= 10Hz NBW= 1Hz
	CAPACITANCE					
C_{ISS}	Input	--	--	6	pF	V_{DS}= 20V V_{GS}= 0 f= 1MHz
C_{RSS}	Reverse Transfer	--	--	2	pF	
C_{DD}	Drain-to-Drain	--	0.1	--	pF	V_{DG}= 20V I_D= 200µA

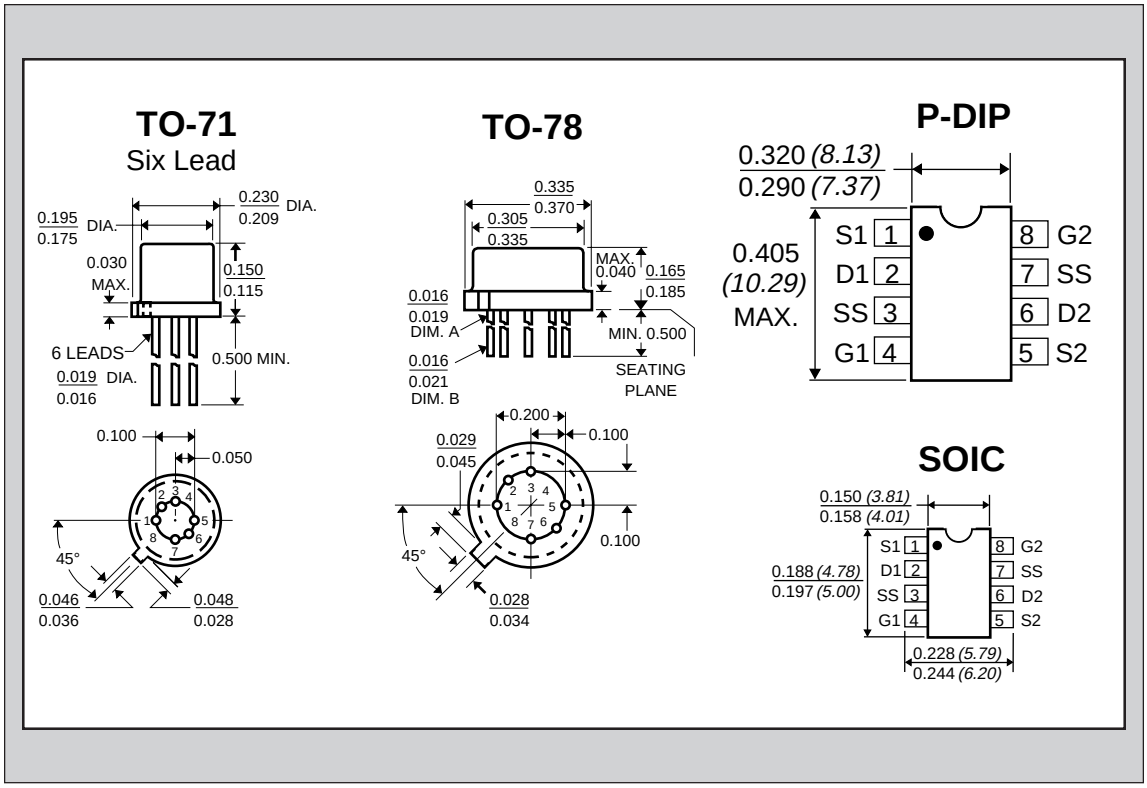

NOTES:

1. These ratings are limiting values above which the serviceability of any semiconductor may be impaired.